Courtesy of http://BlackRadios.terryo.org

APPENDIX A

WJ-954X/ACT1 ACTIVITY MONITOR OPTION

NOTE

This Appendix describes all WJ-954X/ACT1 options through software version 2.00. All operational differences that exist between software versions 1.XX and 2.00 are clearly identified herein. The primary difference is that version 1.XX is implemented on PC assembly 796845-1 while version 2.00 is implemented on PC assembly 796927-2. For completeness, parts lists and schematics for both PC assemblies are included in this document. Refer to **Table 1-2** in the WJ-954X Instruction Manual for additional software compatibility information.

Copyright © Watkins-Johnson Company 1992
All Rights Reserved

WATKINS-JOHNSON COMPANY
700 QUINCE ORCHARD ROAD
GAITHERSBURG, MARYLAND 20878-1794

November 1994

Courtesy of http://BlackRadios.terryo.org

WARNING

This equipment utilizes voltages which are potentially dangerous and may be fatal if contacted. Exercise extreme caution when working with the equipment with any protective cover removed.

PROPRIETARY STATEMENT

This document and subject matter disclosed herein are proprietary items to which Watkins-Johnson Company retains the exclusive right of dissemination, reproduction, manufacture and sale.

This document is provided to the individual or using organization for their use alone in the direct support of the associated equipment unless permission for further disclosure is expressly granted in writing.

Courtesy of http://BlackRadios.terryo.org

TABLE OF CONTENTS

APPENDIX A

Paragraph		Page
A.1	Description	A-1
A.2	Operation	A-1
A.2.1	Local Operation	A-1
A.2.1.1	Selecting the WJ-954X/ACT1 Option for Control	A-1
A.2.2	Remote Operations	A-3
A.2.2.1	Selecting the WJ-954X/ACT1 Option for Control	A-4
A.2.2.2	Selecting Demodulators for Activity Monitor Channels	A-4
A.2.2.3	Requesting the Activity Type of an Activity Monitor Channel	A-5
A.3	Reference Designation Prefix	A-5
A.4	List of Manufacturers	A-5
A.5	Parts List	A-5
A.6	Type WJ-954X/ACT1 Activity Monitor Option (Level 1)	A-7
A.6.1	Type 796845-1 Activity Monitor PC Assembly (Ver 1.XX)	A-8
A.6.2	Type 796927-2 Flex Demod/Activity Monitor PC Assembly (Ver 2.00)	A-10

LIST OF TABLES

Table		Page
A-1	Remote Commands for the WJ-954X/ACT1 Option	A-3

LIST OF ILLUSTRATIONS

Figure		Page
A-1	Main Menu Display	A-1
A-2	Selecting the WJ-954X/ACT1 Option for Control	A-2
A-3	Activity Monitor Display	A-2
A-4	Selecting a Demodulator for an Activity Monitor Channel	A-3
A-5	Type 796845-1 Activity Monitor Schematic Diagram 580985 (Ver 1.XX)	A-15
A-6	Type 796927-2 Flex Demod/Activity Monitor Schematic Diagram 581142 (Ver 2.00)	A-17

Courtesy of http://BlackRadios.terryo.org

APPENDIX A

WJ-954X/ACT1 ACTIVITY MONITOR OPTION

Courtesy of http://BlackRadios.terryo.org

APPENDIX A

WJ-954X/ACT1 ACTIVITY MONITOR OPTION

A.1 DESCRIPTION

The WJ-954X/ACT1 Activity Monitor option provides a signal classification capability for the WJ-9548 Digital FDM Demultiplexer, the WJ-9543 Channel-Group Demultiplexer and other members of the WJ-954X family. Voice grade signals can be categorized as voice, data, signaling tones, or no activity.

The output of twelve selected demodulators are simultaneously monitored for signal classification, which can then be monitored by a local operator via the Demultiplexer's front panel display or remotely via the status register and an IEEE-488 Interface.

The WJ-954X/ACT1 option consists of an Activity Monitor PC Assembly (WJ P/N 796845-1 for software version 1.XX or WJ P/N 796927-2 for software version 2.00) which plugs into one of the vacant option slots in the Demultiplexer chassis.

A.2 OPERATION

The outputs of twelve demodulators can be selected at one time for signal classification. The demodulator outputs can be selected locally via the Demultiplexer's front panel or remotely via an IEEE-488 Interface bus. See **paragraph A.2.1** for Local operations and **paragraph A.2.2** for Remote operations.

A.2.1 LOCAL OPERATION

A.2.1.1 Selecting the WJ-954X/ACT1 Option for Control

Before a demodulator output can be selected for signal classification, the Activity Monitor Audio option must first be selected for configuration changes. To select the WJ-954X/ACT1 option, first select the OPTION CONFIGURATION menu item in the Main Menu (see **Figure A-1**).

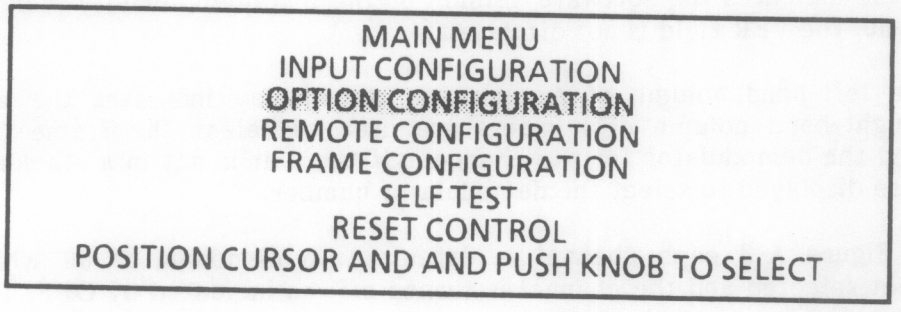

Figure A-1. Main Menu Display

Courtesy of http://BlackRadios.terryo.org

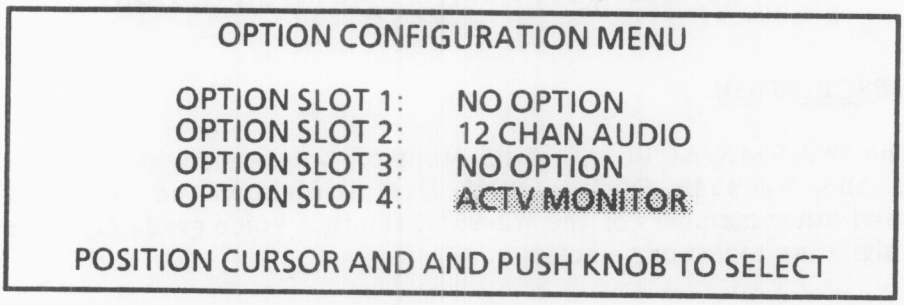

Figure A-2. Selecting the WJ-954X/ACT1 Option for Control

The Option Configuration Menu is displayed showing the Activity Monitor option and its option slot location in the Demultiplexer (see **Figure A-2**). Move the cursor to the ACTV MONITOR menu item and push the CURSOR knob or ENTER key to select the option and to display the Activity Monitor display (**Figure A-3**).

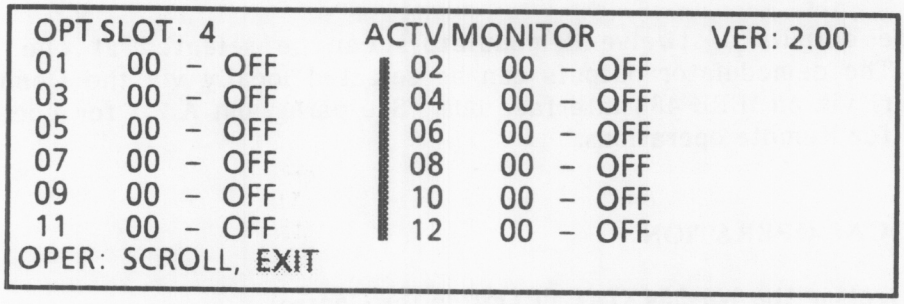

Figure A-3. Activity Monitor Display

The OPT SLOT field in the upper left of the display indicates the option slot number into which the selected Activity Monitor PC assembly is installed. The VER field in the upper right of the display indicates the software version of the installed Activity Monitor option. For versions below 2.00, the VER field is not displayed.

The left-hand column of numbers on the display indicates the activity monitor channel. The right-hand column of numbers are used to select the frame (if in a stacked configuration) and the demodulator for the channel. If the unit is not in a stacked configuration, only two digits are displayed to select the demodulator number.

In **Figure A-3** each channel is defaulted to demodulator 00 which indicates a demodulator is not selected and the channel is turned off, as indicated by OFF. Move the cursor to the demodulator field and use the EDIT control to select the demodulator (01-24). Entering a demodulator number selects the demodulator and causes OFF to be replaced with the signal classification of the demodulator's output (see **Figure A-4**). The possible classifications are VOICE, DATA, TONES (Signalling Tones), and NO ACTV (no signal activity).

Courtesy of http://BlackRadios.terryo.org

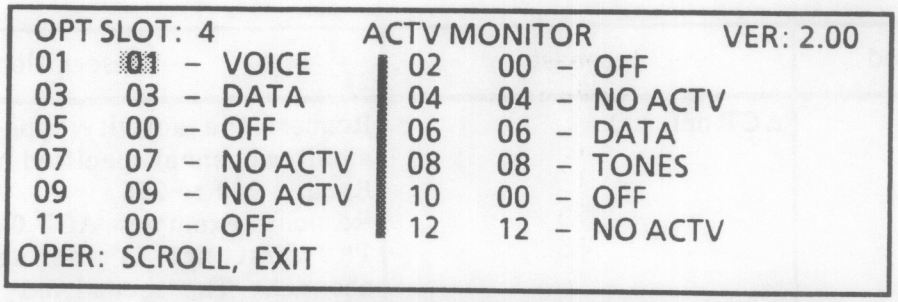

Figure A-4. Selecting a Demodulator for an Activity Monitor Channel

Once the demodulator selections for activity monitor channels are made, move the cursor to the EXIT field and push the CURSOR control to return the display to the Option Configuration Menu.

A.2.2 REMOTE OPERATIONS

Table A-1 lists the commands and queries used for remote control of the WJ-954X/ACT1 option. Command arguments are accepted as forgiving numeric representation (nrf); response formats are provided as numeric response integers (nr1). See **paragraph 2.6.2** in the WJ-954X Instruction Manual for further details on numeric data representation.

Table A-1. Remote Commands for the WJ-954X/ACT1 Option

Command	Response	Description
OPS nrf		Select the option slot number for configuration changes. See **paragraph A.2.2.1.** Range: 1 to 4
OPS?	OPS nr1	Request the current selected option slot number. Response example: OPS 2 Reset value: 1
ASG nrf,nrf,nrf		Set the channel number (first argument), the frame number (second argument), and the demodulator number (third argument). The selected or specified demodulator within the selected or specified frame provides the output to the selected or specified activity monitor channel. Channel range: 1 to 12 Frame range: 0 to 8 Demodulator range: 0 to 24 (0 turns off the audio channel)
AGS nrf?	ASG nr1,nr1,nr1	Request the frame (second response) and the demodulator (third response) for the audio channel specified by nrf (first response). Response example: ASG 12,0,02

Courtesy of http://BlackRadios.terryo.org

Table A-1. Remote Commands for the WJ-954X/ACT1 Option (Continued)

Command	Response	Description
ACT nrf?	ACT nr1, nr1	Request the activity type of the activity monitor channel specified by nrf. Range: 000 to 255 Response example: ACT 01, 001 The first nr1 is the activity monitor channel. The second nr1 is a bit mapped value representing the activity type as follows: Bit — Description 0 — Voice type of activity 1 — Data type of activity 2 — Signalling tones activity 3-15 — Not Used A returned value of zero (no bits set) indicates No Activity on the demodulator output being monitored.

A.2.2.1 Selecting the WJ-954X/ACT1 Option for Control

Before demodulators can be selected for signal classification, the Activity Monitor option must first be selected for configuration changes. The OPS command and argument is used to select options slots 1, 2, 3, or 4. This command must always precede, on the same program line, any /ACT1 option command intended for slots 2, 3, or 4. If a slot number is not specified on the program line, the Demultiplexer directs the command to the option in slot 1. Each remote command on the program line should be delimited with a semicolon. Before selecting the option, it can first be determined in which of the four option slots the Activity Monitor option is located (*OPT?). Then send the OPS command with an argument of 1, 2, 3, or 4 (as determined by option slot location) followed by a semicolon and the rest of the program line. Subsequent to processing a command line, the Demultiplexer would return to its control of slot 1. See the main manual for more information on the *OPT? query.

A.2.2.2 Selecting Demodulators for Activity Monitor Channels

The ASG command and three arguments are used to select a demodulator to provide the output for one of the twelve activity monitor channels. The first argument is used to select the channel from 1 to 12. The second argument is used to select the frame number for which the demodulator is located. If the unit is in a stacked configuration, the argument can be any number from 1 to 8. If the unit is a stand-alone, 0 is to be entered for the frame number. The third argument is used to select the demodulator number, from 1 to 24. An activity monitor channel can be turned off by sending 00 in the demodulator argument.

The ASG nrf? query can be used to determine the currently selected demodulator for an activity monitor channel (nrf is the channel number from 1 to 12). The response to this query consists of three arguments. The first argument is the channel number requested, the second is the frame number (0-8) where the demodulator is located, and the third argument is the demodulator number (00 to 24).

Courtesy of http://BlackRadios.terryo.org

The signal classification for the output of a demodulator can be requested by reading the contents of the Demultiplexer's Activity Summary Register. Refer to **paragraph 2.6.9.3** in the WJ-954X Instruction Manual for details on reading the contents of this register.

A.2.2.3 Requesting the Activity Type of An Activity Monitor Channel

The Current activity type contained in an activity monitor channel is requested with the ACT nrf? query, where nrf is the activity monitor channel number. When the ACT nrf? query is sent, the unit responds with the activity monitor channel number and the type of activity. Activity type response is a bit mapped value of sixteen bits, as listed in **Table A-1** for the ACT nrf? query.

A.3 REFERENCE DESIGNATION PREFIX

The use of partial reference designations are used on the equipment and on the manual illustrations. This partial reference designation consists of the component type letter(s) and the identifying component number. The complete reference designation may be obtained by placing the proper prefix before the partial reference designation. Reference designation prefixes are included on the drawings and illustrations in the figure titles (in parenthesis).

A.4 LIST OF MANUFACTURERS

The manufacturers listed below are supply sources used for obtaining certain parts in this option, and are not listed in the base manual. All other manufacturers not listed below can be found in the base manual.

Mfr. Code	Name and Address
52063	EXAR Integrated Systems 2222 Qume Drive P. O. Box 49007 San Jose, CA 95161
61873	Omnetics Connector Corp. 7260 Commerce Circle East Minneapolis, MN 55432
8Z573	JS Terminal Corporation 1380 Brommel Avenue Elk Grove Village, IL 60007

A.5 PARTS LIST

The following parts lists contain all the electrical components used in this option, along with mechanical parts which may be subject to unusual wear or damage. For a comprehensive listing of all parts and a list of manufacturers, refer also to the base manual. When ordering replacement parts from the Watkins-Johnson Company, specify the unit type, the serial number, software release number, the option configuration, and any applicable option software version numbers. Also include the reference designation and the description of each item ordered. The list of manufacturers, provided in **paragraph A.4** and the base manual, and the manufacturer's part number, provided in **paragraph A.6**, are supplied as a guide to aid the user of the equipment while in the field. The parts listed may not necessarily be identical with the parts installed in the unit. The parts listed in **paragraph A.6** will provide for satisfactory unit operation.

Courtesy of http://BlackRadios.terryo.org

Replacement parts may be obtained from any manufacturer provided that the physical characteristics and electrical parameters of the replacement item are compatible with the original part. In the case where components are defined by a military or industrial specification, a vendor which can provide the necessary component is suggested as a convenience to the user.

Parts lists and schematics are provided in the following pages for two distinct printed circuit assemblies: type 796845-1 and type 796927-2. Either of the two is required to provide the Activity Monitor function. Type 796845-1 is used for Activity Monitor software version 1.XX while type 796927-2 is used for version 2.00.

NOTE

As improvements in semiconductors are made, it is the policy of Watkins-Johnson to incorporate them in proprietary products. As a result, some transistors, diodes and integrated circuits which are installed in the unit may not agree with the parts lists or schematic diagrams of this manual. However, substitution of the semiconductor devices listed in this manual may be substituted with satisfactory results.

Courtesy of http://BlackRadios.terryo.org

A.6 TYPE WJ-954X/ACT1 ACTIVITY MONITOR (LEVEL 1) OPTION

REF DESIG	DESCRIPTION	QTY PER ASSY	MANUFACTURER'S PART NO.	MFR. CODE	RECM VENDOR
	Revision B1				
ACT1-A1	Activity Monitor PC Assembly	1	796845-1 (VER 1.XX)	14632	
	or				
ACT1-A1	Activity Monitor PC Assembly	1	796927-2 (VER 2.00)	14632	

Courtesy of http://BlackRadios.terryo.org

A.6.1 TYPE 796845-1 ACTIVITY MONITOR PC ASSEMBLY (VER 1.XX)

REF DESIG	DESCRIPTION	QTY PER ASSY	MANUFACTURER'S PART NO.	MFR. CODE	RECM VENDOR
	Revision A				
C1	Capacitor, Ceramic: .033 µF, 10%, 50 V	28	841415-022	14632	
C2 Thru C18	Same as C1				
C19	Capacitor, Tantalum: 2.2 µF, 20%, 20 V	2	841293-09	14632	
C20	Same as C1				
C21	Same as C19				
C22	Same as C1				
C23	Capacitor, Tantalum: 6.8 µF, 20%, 6.3 V	1	841293-14	14632	
C24 Thru C30	Same as C1				
C31	Not Used				
C32	Not Used				
C33	Same as C1				
J1	Connector, Receptacle 3 Pin	1	68016-103	22526	
R1	Resistor, Fixed: 100 kΩ, 5%, .1 W	29	841414-121	14632	
R2 Thru R26	Same as R1				
R27	Not Used				
R28	Resistor, Fixed: 22Ω, 5%, .1 W	1	841414-033	14632	
R29	Resistor, Fixed: 1.0 kΩ, 5%, .1 W	1	841414-073	14632	
R30	Resistor, Fixed: 10 kΩ, 5%, 1/10 W	1	841414-097	14632	
R31	Same as R1				
R32	Same as R1				
TP1	Connector, Terminal, 10 Position	1	929805-01-10-15	53387	
TP2	Connector, Terminal, 7 Position	2	929805-01-07-15	67129	
TP3	Same as TP2				
U1	Integrated Circuit, Dual D-Type Flip-Flop	2	8674HC74SO14U	14632	
U2	Same as U1				
U3	Integrated Circuit, SRAM	3	MT5C2568DJ-35	6Y440	
U4	Integrated Circuit, EPROM	1	841529	14632	
U5	Integrated Circuit, Line Driver	1	SN75155D	01295	
U6	Integrated Circuit, Quad 2-Input OR	1	8674HC32SO14U	14632	
U7	Integrated Circuit, Quad Buffer/Line Driver	1	8674HC125SO14U	14632	
U8	Integrated Circuit, Quad Buffer/Line Driver	1	8674AC125SO14U	14632	
U9	Integrated Circuit, Hex Inverter	1	8674AC04SO14U	14632	
U10	Same as U3				
U11	Integrated Circuit, Quad 2-Input AND	1	8674AC08S014U	14632	
U12	Integrated Circuit, Quad 2-Input OR	1	8674AC32S014U	14632	
U13	Same as U3				

Courtesy of http://BlackRadios.terryo.org

REF DESIG	DESCRIPTION	QTY PER ASSY	MANUFACTURER'S PART NO.	MFR. CODE	RECM VENDOR
U14	Integrated Circuit, RAM	1	IDT7143L70J	61772	
U15	Integrated Circuit, Digital Signal Processor	1	XSP56001ZL20	04713	
U16	Integrated Circuit, Hex Buffer	1	8674HC365S016U	14632	
U17	Integrated Circuit, Magnitude Comparator	1	8674HC85S016U	14632	
U18	Integrated Circuit, Binary Counter	1	8674HC590S016W	14632	
U19	Integrated Circuit, 8-Input NAND	1	8674HC30S014	14632	
XU4	Socket, Receptacle PC MT	2	SL-114-G-11	55342	
XU15	Socket, DSP	1	DSP56001SOCKET01	04713	
Y1	Not Used				

Courtesy of http://BlackRadios.terryo.org

A.6.2 TYPE 796927-2 ACTIVITY MONITOR PC ASSEMBLY (VER 2.00)

REF DESIG	DESCRIPTION	QTY PER ASSY	MANUFACTURER'S PART NO.	MFR. CODE	RECM VENDOR
	Revision A				
C1	Capacitor, Ceramic: .033 µF, 10%, 50 V	37	841415-022	14632	
C2	Same as C1				
C3	Same as C1				
C4	Capacitor, Tantalum: 1.0 µF, 20%, 16 V	10	841293-04	14632	
C5	Same as C1				
C6	Same as C1				
C7	Same as C4				
C8 Thru C11	Same as C1				
C12	Capacitor, Ceramic: 47 pF, 5%, 50 V	4	N2-63057	14632	
C13 Thru C15	Same as C4				
C16	Same as C1				
C17	Same as C1				
C18	Same as C12				
C19 Thru C21	Same as C1				
C22	Capacitor, Ceramic: .1 µF, 10%, 50 VDC	3	841250-25	14632	
C23	Same as C1				
C24	Capacitor, Ceramic: 22 pF, 5%, 50 V	1	841415-003	14632	
C25	Same as C1				
C26	Same as C1				
C27 Thru C30	Same as C4				
C31	Same as C22				
C32 Thru C38	Same as C1				
C39	Same as C22				
C40 Thru C42	Same as C1				
C43	Same as C4				
C44	Capacitor, Ceramic: 470 pF, 5%, 50 V	2	841415-011	14632	
C45	Capacitor, Tantalum: 6.8 µF, 20%, 6.3 V	2	841293-14	14632	
C46	Same as C44				
C47	Same as C1				
C48	Same as C12				
C49 Thru C54	Same as C1				

Courtesy of http://BlackRadios.terryo.org

REF DESIG	DESCRIPTION	QTY PER ASSY	MANUFACTURER'S PART NO.	MFR. CODE	RECM VENDOR
C55	Same as C45				
C56	Same as C1				
C57	Same as C1				
C58	Same as C12				
C59	Same as C1				
J1	Connector, Microminiature Pin, 18 Pin	1	PS2-18-CB-A1217	61873	
J2	Connector, Header, PC MT	1	68705-103	22526	
J3	Connector, Header, PC MT	4	68705-102	22526	
J4	Same as J3				
J5	Same as J3				
P3	Connector, Plug, 11 Pin	1	11PS-JE	8Z573	
R1	Resistor, Fixed: 1.0 kΩ, 5%, .1 W	6	841414-073	14632	
R2	Resistor, Fixed: 10 kΩ, 5%, .1 W	2	841414-097	14632	
R3	Resistor, Fixed: 100 kΩ, 5%, .1 W	41	841414-121	14632	
R4 Thru R17	Same as R3				
R18	Same as R2				
R19 Thru R21	Same as R1				
R22	Same as R3				
R23	Same as R3				
R24	Resistor, Fixed: 680 kΩ, 5%, .1 W	1	841414-141	14632	
R25	Same as R3				
R26	Same as R3				
R27	Same as R1				
R28	Same as R3				
R29	Same as R3				
R30	Not Used				
R31	Not Used				
R32	Same as R3				
R33	Resistor, Fixed: 1.0 MΩ, 5%, .1 W	5	841414-145	14632	
R34	Same as R33				
R35 Thru R43	Same as R3				
R44	Not Used				
R45	Same as R3				
R46	Same as R33				
R47	Same as R33				
R48	Not Used				
R49	Same as R3				

Courtesy of http://BlackRadios.terryo.org

REF DESIG	DESCRIPTION	QTY PER ASSY	MANUFACTURER'S PART NO.	MFR. CODE	RECM VENDOR
R50	Not Used				
R51	Not Used				
R52 Thru R56	Same as R3				
R57	Resistor, Fixed: 68 kΩ, 5%, .1 W	1	841414-117	14632	
R58	Resistor, Fixed: 470 kΩ, 5%, .1 W	1	841414-137	14632	
R59	Resistor, Fixed: 82 kΩ, 5%, .1 W	1	841414-119	14632	
R60	Same as R33				
R61	Not Used				
R62	Same as R3				
R63	Same as R1				
R64	Resistor, Fixed: 1.5 kΩ, 5%, .1 W	1	841414-077	14632	
R65	Same as R3				
R66	Same as R3				
TP1	Connector, Terminal, PC MT	2	929805-01-07-15	67129	
TP2	Same as TP1				
TP3	Same as J3				
U1	Integrated Circuit, Line Driver and Receiver Monolithic	1	SN75155D	01295	
U2	Integrated Circuit, Analog Switch	2	DG413DY	17856	
U3	Same as U2				
U4	Integrated Circuit CMOS, Dual 4-Bit Binary Ripple Counter	1	74HC393 SO14	34371	
U5	Integrated Circuit, SRAM: 8K X 8 SRAM CMOS	3	MT5C6408DJ-25	6Y440	
U6	Same as U5				
U7	Integrated Circuit, Digital Signal Processor, 27 MHz	1	XSP56001FE27	04713	
U8	Amplifier, Dual OP AMP	2	MC34002D	04713	
U9	Integrated Circuit, 16-Bit Audio D/A Converter	2	AD1856R	24355	
U10	Same as U8				
U11	Integrated Circuit, Quad D-Type Flip-Flop	2	74HC173 SO16	04713	
U12	Integrated Circuit, 32 kΩ, CMOS Dual Port RAM	1	IDT7143L55J	61772	
U13	Same as U5				
U14	Same as U11				
U15	Integrated Circuit, SRAM 32K X 8 SRAM	3	MT5C2568DJ-25	6Y440	
U16	Same as U15				
U17	Same as U15				
U18	Same as U9				
U19	Integrated Circuit, Switched Capacitor Filter	1	XR-1016D	52063	
U20	Integrated Circuit, EPROM	1	841793	14632	
U21	Integrated Circuit, Dual 1 of 4 Decoder/Demultiplexer	2	74AC139 SO16	34371	
U22	Integrated Circuit, Dual 4-Input NAND Gate	1	74HC20 SO14	02735	
U23	Integrated Circuit, Dual D Flip-Flop	2	74HC74 SO14	04713	
U24	Integrated Circuit, Hex Buffer/Line Driver	1	74HC365 SO16	07029	

Courtesy of http://BlackRadios.terryo.org

REF DESIG	DESCRIPTION	QTY PER ASSY	MANUFACTURER'S PART NO.	MFR. CODE	RECM VENDOR
U25	Same as U23				
U26	Integrated Circuit, Quad Buffer, Line Driver	1	74HC125 SO14	34371	
U27	Integrated Circuit, Quad 2-Input AND Gate	1	74HC08 SO14	02735	
U28	Integrated Circuit, 8 Bit Magnitude Comparator	1	74HC688 SOL20	02735	
U29	Same as U21				
U30	Integrated Circuit, CMOS Hex Inverter	1	74HC14 SO14	02735	
XU20	Socket, IC, 16 Pos, Single Row	1	SL-116-G-11	55322	
Y1	Oscillator, Quartz Crystal: 25.8048 MHz	1	FPX-SM-25.8048 MHz	61429	

Courtesy of http://BlackRadios.terryo.org

NOTES:
1. UNLESS OTHERWISE SPECIFIED:
   A) RESISTANCE IS IN OHMS, ±5%, 1/8W.
   B) CAPACITANCE IS IN µF.
2. * DENOTES COMPONENTS NOT USED.
3. REFER TO TABLE 1 FOR EPROM SCD NUMBER ASSOCIATED WITH U4.

TYPE	EPROM SCD
796845-1	841529
796845-2	841584

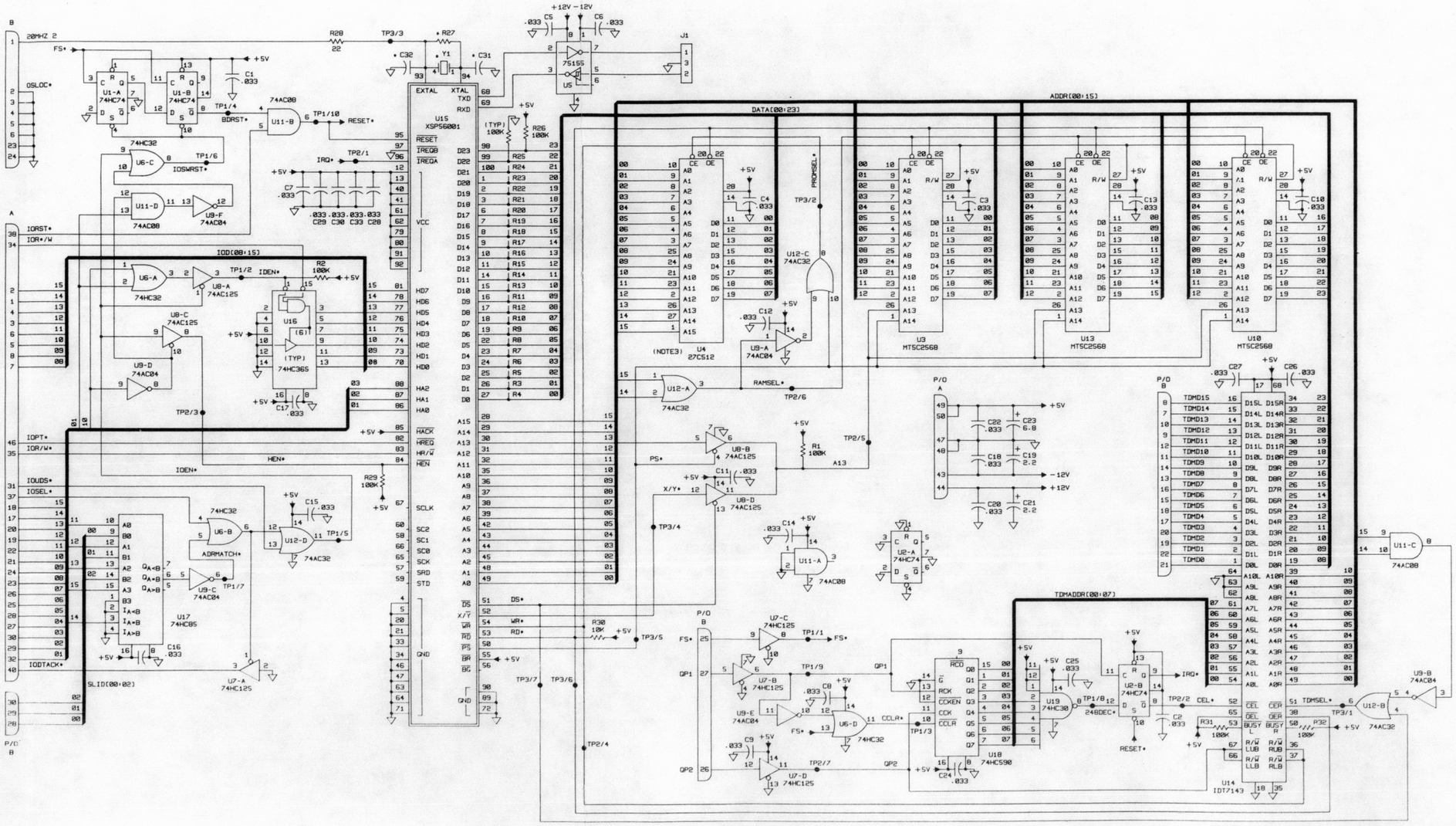

Figure A-5. Type 796845-1, Activity Monitor Assembly Schematic Diagram 580985 (Ver 1.XX) (A)

Courtesy of http://BlackRadios.terryo.org

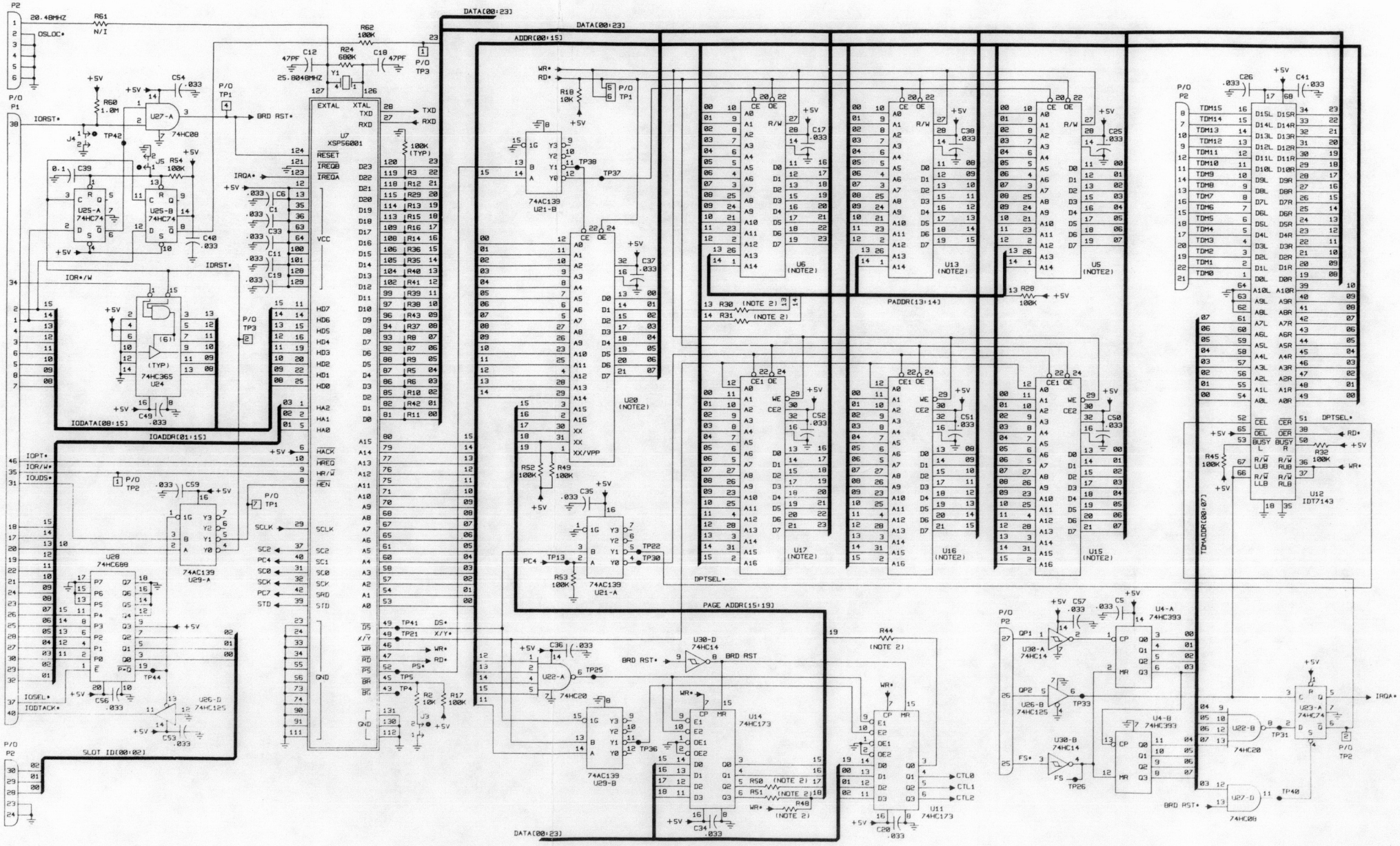

Figure A-6. Type 796927-2, Flex Demod/Activity Monitor Assembly Schematic Diagram 581142 (Ver 2.00) (Sheet 1 of 2) (B)

Courtesy of http://BlackRadios.terryo.org

TES:

1. SWITCHES ARE SHOWN WITH A LOGIC '1' CONTROL INPUT.
2. IT IS POSSIBLE TO USE VARIOUS DENSITY MEMORY CHIPS FOR U5,U6,U13,U15. U16,U17,& U20. THE FOLLOWING LISTS EACH ASSY DASH NO.(TYPE), IT'S MEMORY CONFIGURATION. PART NO. AND WHICH 0-OHM RESISTORS MUST BE INSTALLED.

FUNCTION	TYPE	U20(EPROM)			U5,6,13(SRAM)••		U15,16,17(SRAM)•••		0-OHM JUMPERS•					
		SCD NO.	PART NO.	ORG.	PART NO.	ORG.	PART NO.	ORG.	R30	R31	R44	R48	R50	R51
FLEXIBLE DEMOD	796927-1	841741	27C010	128K X 8	MTSC6408	8K X 8	MTSC2568	32K X 8	N	N	N	N	N	N
ACTIVITY MONITOR, LEVEL 1	796927-2	841793	27C010	128K X 8	MTSC6408	8K X 8	MTSC2568	32K X 8	N	N	N	N	N	N
ACTIVITY MONITOR, LEVEL 2	796927-3	841794	27C010	128K X 8	MTSC6408	8K X 8	MTSC2568	32K X 8	N	N	N	N	N	N

• I= 0-OHM JUMPER INSTALLED. N= NOT INSTALLED

•• A 28-PIN 32K X 8 SRAM IS SHOWN ON THE SCHEMATIC. WHEN A 28-PIN 8K X 8 SRAM IS INSTALLED, PIN 26 IS CE2 (VS.A13) AND PIN1 IS NC (VS.A14)

••• A 32-PIN 128K X 8 SRAM IS SHOWN ON THE SCHEMATIC. WHEN A 28-PIN 32K X 8 SRAM IS INSTALLED, PINS 1 THRU 28 CORRESPOND TO PINS 3 THRU 30 ON THE 32-PIN DEVICE.

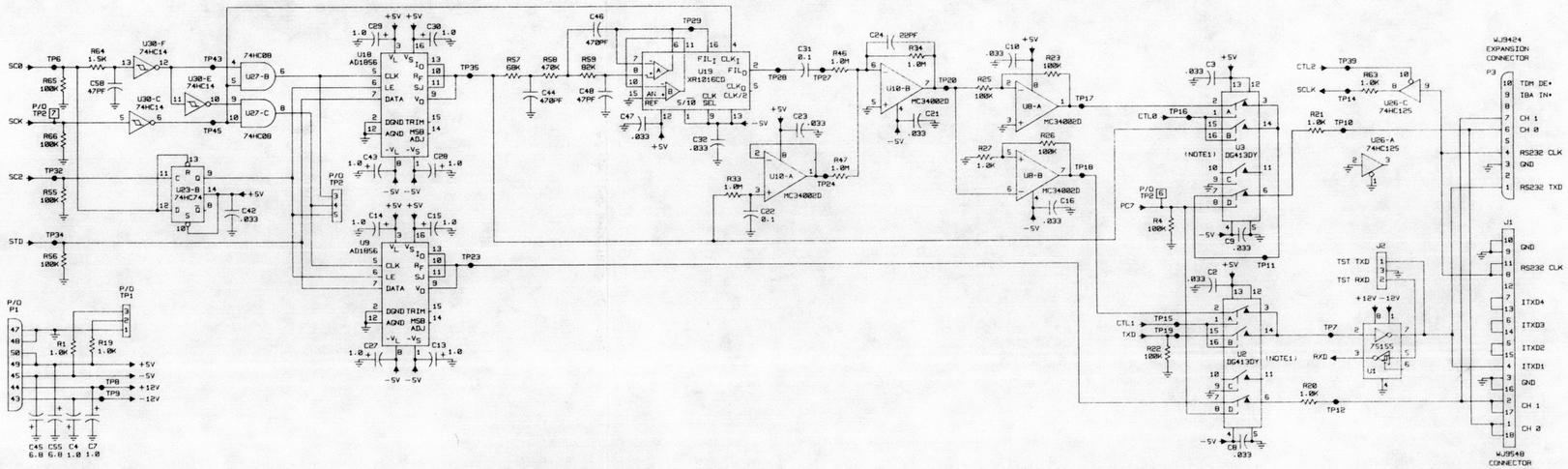

Figure A-6. Type 796927-2, Flex Demod/Activity Monitor Assembly Schematic Diagram 581142 (Ver 2.00) (Sheet 2 of 2) (B)

Courtesy of http://BlackRadios.terryo.org

APPENDIX B

WJ-954X/CEPT CEPT FORMATTER OPTION

Copyright © Watkins-Johnson Company 1991
All Rights Reserved

WATKINS-JOHNSON COMPANY
700 QUINCE ORCHARD ROAD
GAITHERSBURG, MARYLAND 20878-1794

November 1994

Courtesy of http://BlackRadios.terryo.org

WARNING

This equipment utilizes voltages which are potentially dangerous and may be fatal if contacted. Exercise extreme caution when working with the equipment with any protective cover removed.

PROPRIETARY STATEMENT

This document and subject matter disclosed herein are proprietary items to which Watkins-Johnson Company retains the exclusive right of dissemination, reproduction, manufacture and sale.

This document is provided to the individual or using organization for their use alone in the direct support of the associated equipment unless permission for further disclosure is expressly granted in writing.

Courtesy of http://BlackRadios.terryo.org

TABLE OF CONTENTS

APPENDIX B

Paragraph		Page
B.1	Electrical Characteristics	B-1
B.2	Mechanical Characteristics	B-1
B.3	Installation	B-1
B.3.1	CEPT Output Connector	B-1
B.4	Operation	B-2
B.4.1	Local Operations	B-2
B.4.1.1	Selecting the WJ-954X/CEPT Option for Control	B-2
B.4.1.2	Selecting the CEPT Operating Mode	B-3
B.4.1.3	Selecting the Encoding Format	B-4
B.4.1.4	Framing Selection	B-4
B.4.1.5	Selecting Demodulators for a CEPT Channel	B-4
B.4.2	Remote Operations	B-5
B.4.2.1	Selecting the WJ-954X/CEPT Option for Control	B-6
B.4.2.2	Selecting Demodulators to Provide the CEPT Outputs	B-6
B.4.2.3	Selecting the CEPT Formatter Operating Mode	B-7
B.4.2.4	Selecting the CEPT Encoding Format	B-7
B.4.2.5	Selecting the CEPT Framing Format	B-7
B.5	Reference Designation Prefix	B-7
B.6	List of Manufacturers	B-8
B.7	Parts List	B-8
B.8	WJ-954X/CEPT CEPT Formatter Option	B-9
B.8.1	Type 796820-1 CEPT Formatter PC Assembly	B-10

LIST OF TABLES

Table		Page
B-1	Remote Commands for the WJ-954X/CEPT Option	B-5

LIST OF ILLUSTRATIONS

Figure		Page
B-1	Location of the CEPT Formatter Output Connector	B-2
B-2	Main Menu Display	B-2
B-3	Option Configuration Menu	B-3
B-4	CEPT Formatter Option Display	B-3
B-5	CEPT Formatter Display with Selected Demodulators	B-4
B-6	Type 796820-1, CEPT Formatter Assembly Schematic Diagram 580970	B-13

Courtesy of http://BlackRadios.terryo.org

APPENDIX B

WJ-954X/CEPT CEPT FORMATTER OPTION

Courtesy of http://BlackRadios.terryo.org

APPENDIX B

WJ-954X/CEPT CEPT FORMATTER OPTION

B.1 ELECTRICAL CHARACTERISTICS

The WJ-954X/CEPT CEPT Formatter option provides voice-grade data outputs in the form of primary level CEPT PCM streams at a rate of 20.48 Mbps, with a capacity of 30 channels. This option may be installed in the WJ-9548 Digital FDM Demultiplexer, the WJ-9543 Channel-Group Demultiplexer, and other members of the WJ-954X series.

Each CEPT channel can be directed to carry output data from any demodulator installed in the Demultiplexer. Standard A-LAW or linearly encoded CEPT formats are selectable. Standard CCITT or user-defined framing formats can also be selected. Four CEPT operating modes are available: Off, Normal, TAOS (Transmit All Ones), and Test. TAOS and Test modes are used for testing purposes.

CEPT parameter and demodulator selections can be made locally via the Demultiplexer's front panel controls and displays, or remotely via commands sent from a controller over an IEEE-488 bus.

The CEPT Formatter option retrieves the selected voice-grade channel data from the Demultiplexer's internal TDM data bus. The option's internal circuitry then reconstructs the digital data into the CEPT format, which is then routed to a standard BNC-type connector that is mounted on the rear panel when the option is installed.

B.2 MECHANICAL CHARACTERISTICS

The WJ-954X/CEPT option consists of a CEPT Formatter PC Assembly (WJ P/N 796820-1), a Cable Assembly (WJ P/N 382221-1), and a cable marking kit.

The PC assembly can be installed in any vacant option slot in the Demultiplexer's chassis. The cable assembly includes a BNC-type connector that attaches to the rear panel of the unit. The other end of the cable attaches to the PC assembly. A plate that identifies the CEPT option and the slot configuration of the option is installed on the rear panel directly below the cable assembly's BNC connector. Correspondingly, a decal is affixed to the plug end of the cable that attaches the CEPT Formatter PC Assembly to the rear panel. These are labelled CEPT 1 through CEPT 4.

B.3 INSTALLATION

Figure B-1 shows the location of the BNC-type connector included with the WJ-954X/CEPT option which provides the CEPT output. This connector can be located in any one of four holes available in the rear panel that are designated J18 through J21.

B.3.1 CEPT OUTPUT CONNECTOR

This BNC-type connector provides the selected voice-grade data outputs in the form of a primary level CEPT PCM stream. Output impedance at this connector is 75 ohms, unbalanced.

Courtesy of http://BlackRadios.terryo.org

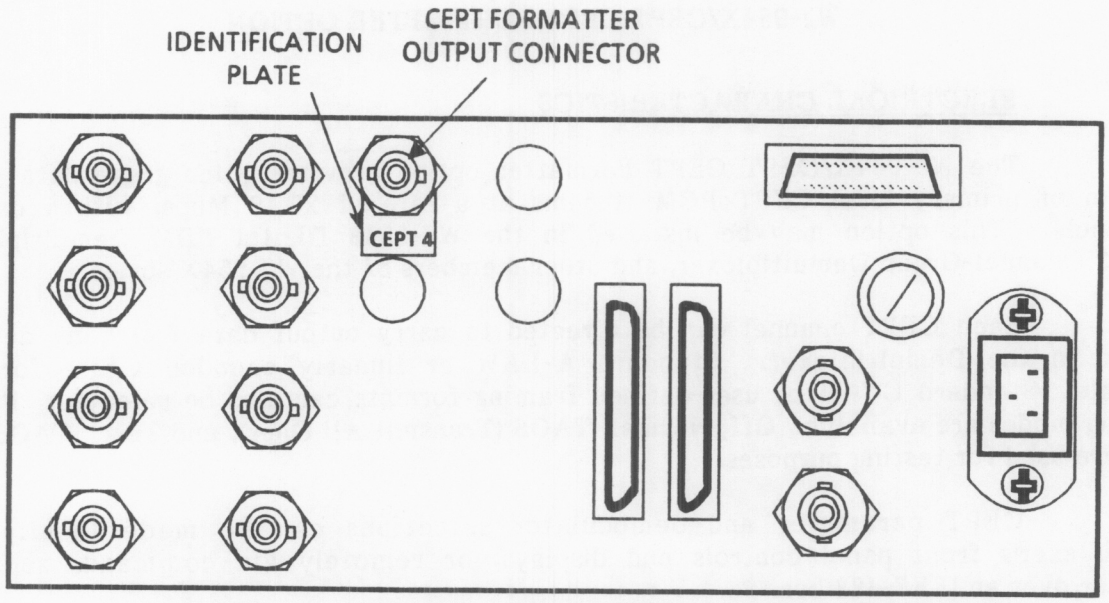

Figure B-1. Location of the CEPT Formatter Output Connector

B.4 OPERATION

The outputs of thirty demodulators can be selected at one time for reconstruction into CEPT format, to be made available at the option's CEPT output connector located on the rear panel of the Demultiplexer. The demodulator outputs can be selected locally via the Demultiplexer's front panel, or remotely via an IEEE-488 Interface bus. Refer to **paragraph B.4.1** for local selections and **paragraph B.4.2** for remote selections.

B.4.1 LOCAL OPERATIONS

B.4.1.1 Selecting the WJ-954X/CEPT Option for Control

Before a demodulator can be selected to provide a CEPT output, the CEPT Formatter option must first be selected for configuration changes. To select the WJ-954X/CEPT option, first select the OPTION CONFIGURATION menu item in the Main Menu (see **Figure B-2**).

MAIN MENU
INPUT CONFIGURATION
OPTION CONFIGURATION
REMOTE CONFIGURATION
FRAME CONFIGURATION
SELF TEST
RESET CONTROL
POSITION CURSOR AND AND PUSH KNOB TO SELECT

Figure B-2. Main Menu Display

Courtesy of http://BlackRadios.terryo.org

The Option Configuration Menu is displayed showing the CEPT Formatter option and its option slot location in the Demultiplexer (see **Figure B-3**). Move the cursor to the CEPT Formatter menu item and push the CURSOR knob or ENTER key to select the option and to display the CEPT Formatter display (**Figure B-4**).

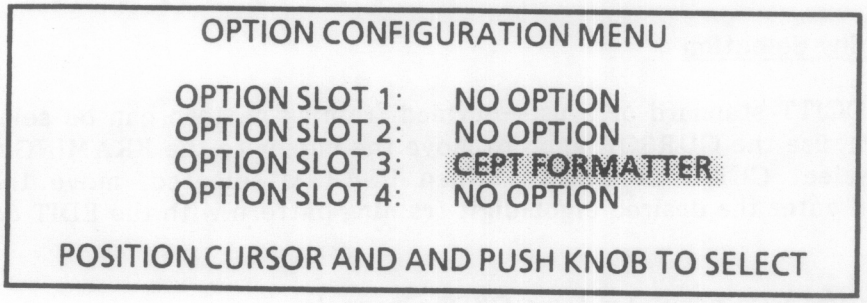

Figure B-3. Option Configuration Menu

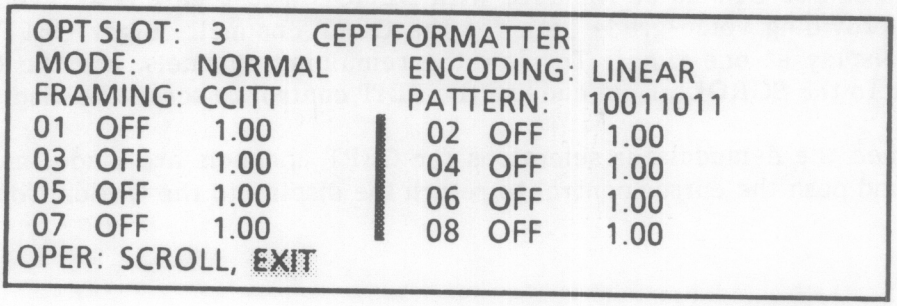

Figure B-4. CEPT Formatter Option Display

B.4.1.2 **Selecting the CEPT Operating Mode**

Four operating modes are available: Off, Normal, TAOS, and Test. Selecting OFF turns off a line driver in the CEPT Formatter PC Assembly which stops all CEPT outputs. Normal is used when CEPT formatted output transmissions are desired. TAOS mode (Transmit All Ones) is used for test purposes. In this mode, the CEPT Formatter outputs a one (1) for each time slot. Similarly, the Test mode outputs a fixed pattern into each time slot (1=1, 2=2, etc.).

To select the operating mode, use the CURSOR knob to move the cursor to the MODE field and use the EDIT control to select the mode (see **Figure B-4**).

Courtesy of http://BlackRadios.terryo.org

B.4.1.3 Selecting the Encoding Format

Two types of encoding formats are available for the CEPT output: Linear and A-LAW standard. To select the encoding format, use the CURSOR knob to move the cursor to the ENCODING field (see **Figure B-4**). Use the EDIT control to select LINEAR or A-LAW.

B.4.1.4 Framing Selection

The CCITT standard or a user-defined framing pattern can be selected. To select the framing pattern, use the CURSOR knob to move the cursor to the FRAMING field and use the EDIT control to select CCITT or USER. When USER is selected, move the cursor to the PATTERN field and enter the desired eight-digit framing pattern with the EDIT control.

B.4.1.5 Selecting a Demodulator for a CEPT Channel

Figure B-4 shows a CEPT Formatter Option Display with each channel defaulted to 00 indicating a demodulator is not selected and with the CEPT channel turned off, as indicated by OFF. If in a stacked configuration a frame number is also displayed. Use the CURSOR knob to move the cursor to the frame and demodulator fields and use the EDIT control to select the frame (1-8) and the demodulator within the frame (01-24). Entering a demodulator number selects the demodulator and causes OFF to be replaced with DEMOD (see **Figure B-5**). This indicates that a demodulator is providing voice-grade data for the CEPT channel. Eight CEPT channels can be viewed on the display at one time. To view the remaining channels, use the CURSOR knob to move the cursor to the SCROLL field and use the EDIT control to scroll the display.

Once the demodulator selections for CEPT channels are made, move the cursor to the EXIT field and push the cursor control to return the display to the Option Configuration Menu.

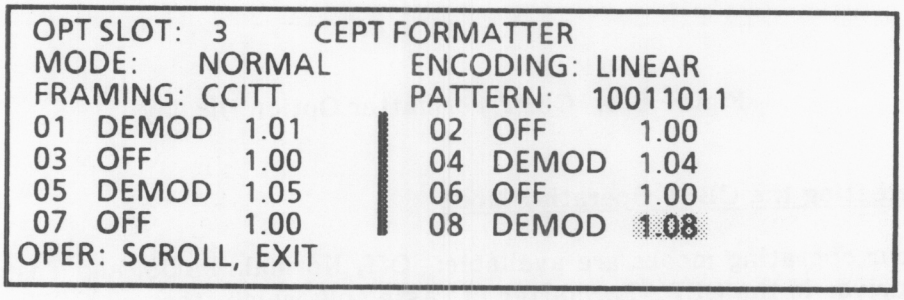

Figure B-5. CEPT Formatter Display with Selected Demodulators

Courtesy of http://BlackRadios.terryo.org

B.4.2 REMOTE OPERATIONS

Table B-1 lists the commands and queries used for remote control of the WJ-954X/CEPT option. Command arguments are accepted as forgiving numeric representation (nrf); response formats are provided as numeric response integers (nr1). See **paragraph 2.6.2** in the WJ-954X Instruction Manual for further details on numeric data representation.

Table B-1. Remote Commands for the WJ-954X/CEPT Option

Command	Response	Description
OPS nrf		Select the option slot number for configuration changes. See **paragraph B.4.2.1.** Range: 1 to 4
OPS?	OPS nr1	Request the currently controlled option slot number. Response example: OPS 1 Default value: 1; Reset value: 1
ASG nrf,nrf,nrf		Set the channel number (first argument), the frame number (second argument), and the demodulator number (third argument). The set demodulator within the set frame provides data to the set CEPT channel. See **paragraph B.4.2.2.** Channel range: 1 to 30 Frame range: 0 to 8 Demodulator range: 0 to 24 (0 turns off the CEPT channel)
ASG nrf?	ASG nr1,nr1,nr1	Request the frame (second response) and the demodulator (third response) for the CEPT channel specified by nrf. First response indicates CEPT channel. Response example: ASG 12,0,02
CPE nrf		Select the CEPT encoding format. See **paragraph B.4.2.4.** Range: 0, A-Law Encoding 1, Linear Encoding
CPE?	CPE nr1	Request the CEPT encoding format selected. Response example: CPE 0
CPF nrf		Select the CEPT framing format. See **paragraph B.4.2.5.** Range: 0, CCITT framing 1, User-defined framing pattern
CPF?	CPF nr1	Request the CEPT framing format. Response example: CPF 0

Courtesy of http://BlackRadios.terryo.org

Table B-1. Remote Commands for the WJ-954X/CEPT Option (Continued)

Command	Response	Description
CPM nrf		Select the CEPT operating mode. See **paragraph B.4.2.3.** Range: 0, Off 1, Normal 2, TAOS 3, Test
CPM?	CPM nr1	Request the selected CEPT operating mode. Response example: CPM 2
CPP nrf		Select an 8-bit user-defined CEPT framing format. See **paragraph B.4.2.5.** Range: 0 to 255
CPP?	CPP nr1	Request the selected user-defined CEPT framing format. Response example: CPP 128

B.4.2.1 Selecting the WJ-954X/CEPT Option for Control

Before demodulators can be selected to provide CEPT outputs, the CEPT Formatter option must first be selected for configuration changes. The OPS command and argument is used to select options slots 2, 3, or 4. This command must always precede, on the same program line, any CEPT option command intended for slots 2, 3, or 4. If a slot number is not specified on the program line, the Demultiplexer directs the command to the option in slot 1. Each remote command on the program line should be delimited with a semicolon. Before selecting the option, it can first be determined in which of the four option slots the CEPT Formatter option is located (*OPT?). Then send the OPS command with an argument of 2, 3, or 4 (as determined by option slot location) followed by a semicolon and the rest of the program line. For example, the program line "*OPS2; CPF1; CPP255*" is a valid entry. Subsequent to processing the sample command line, the WJ-954X would return to its control of slot 1. See the main WJ-954X manual for more information on the *OPT? query.

B.4.2.2 Selecting Demodulators to Provide the CEPT Outputs

The ASG command and three arguments are used to select a demodulator to provide the output for one of the thirty CEPT channels. The first argument is used to select the CEPT channel from 1 to 30. The second argument is used to select the frame number in which the demodulator is located. If the unit is in a stacked setup, the argument can be any number from 1 to 8. If the unit is a stand-alone, 0 is to be entered for the frame number. The third argument is used to select the demodulator number, from 1 to 24. A CEPT channel can be turned off by sending 00 in the demodulator argument.

Courtesy of http://BlackRadios.terryo.org

The ASG nrf? query can be used to determine the currently selected demodulator for a CEPT channel (nrf is the CEPT channel number from 1 to 30). The response to this query consists of three arguments. The first argument is the CEPT channel number requested, the second is the frame number (0-8) where the demodulator is located, and the third argument is the demodulator number (0 to 24).

B.4.2.3 Selecting the CEPT Formatter Operating Mode

Four modes of operation are available for the CEPT Formatter: Off, Normal, TAOS, and Test. The CPM command and argument is used to select the operating mode. Sending CPM 0 places the CEPT into the Off mode. In this mode a line driver in the CEPT Formatter PC Assembly is turned off, stopping all CEPT outputs. Sending CPM 1 selects the Normal operating mode. This is the mode used for normal CEPT output transmissions.

TAOS (Transmit All Ones) and Test modes are intended for testing purposes. Sending CPE 2 selects the TAOS mode. In this mode a one (1) is transmitted for each time slot. Sending CPM 3 selects the Test mode. In this mode a fixed pattern is induced for each time slot (1=1, 2=2, etc.).

The current CEPT Formatter mode can be requested by sending the CPM? query.

B.4.2.4 Selecting the CEPT Encoding Format

The CPE command is used to select the CEPT encoding format for the CEPT outputs. A-LAW standard or Linear formats can be selected. Sending CPE 0 selects A-LAW encoding. Sending CPE 1 selects Linear encoding. The currently selected encoding format for the CEPT outputs can be requested with the CPE? query.

B.4.2.5 Selecting the CEPT Framing Format

The CPF command is used to select the CEPT framing format. Standard CCITT or user-defined framing can be selected. Sending CPF 0 selects CCITT framing, CPF 1 selects user-defined framing format. The currently selected framing format can be requested by sending the CPF? query.

When user-defined framing format is selected, the CPP command and argument are used to enter the user-defined framing format. The argument is an 8-bit word which can be in the range from 0 to 255. The current user defined framing format can be requested by sending the CPP? query.

B.5 REFERENCE DESIGNATION PREFIX

The use of partial reference designations are used on the equipment and on the manual illustrations. This partial reference designation consists of the component type letter(s) and the identifying component number. The complete reference designation may be obtained by placing the proper prefix before the partial reference designation. Reference designation prefixes are included on the drawings and illustrations in the figure titles (in parenthesis).

Courtesy of http://BlackRadios.terryo.org

B.6 LIST OF MANUFACTURERS

No additional manufacturers are required for the parts covered in this appendix, compared to those that are used for the base unit. See the base manual for a complete list of manufacturers, including those associated with the replacement parts listed in this appendix.

B.7 PARTS LIST

The following parts lists contain all the electrical components used in this option, along with mechanical parts which may be subject to unusual wear or damage. For a comprehensive listing of all parts and a list of manufacturers, refer also to the base manual. When ordering replacement parts from the Watkins-Johnson Company, specify the unit type, the serial number, and the option configuration. Also include the reference designation and the description of each item ordered. The list of manufacturers, provided in **paragraph B.6**, and the manufacturer's part number, provided in **paragraph B.8**, are supplied as a guide to aid the user of the equipment while in the field. The parts listed may not necessarily be identical with the parts installed in the unit. The parts listed in **paragraph B.8** will provide for satisfactory unit operation.

Replacement parts may be obtained from any manufacturer provided that the physical characteristics and electrical parameters of the replacement item are compatible with the original part. In the case where components are defined by a military or industrial specification, a vendor which can provide the necessary component is suggested as a convenience to the user.

NOTE

As improvements in semiconductors are made, it is the policy of Watkins-Johnson to incorporate them in proprietary products. As a result, some transistors, diodes and integrated circuits which are installed in the unit may not agree with the parts lists or schematic diagrams of this manual. However, substitution of the semiconductor devices listed in this manual may be substituted with satisfactory results.

Courtesy of http://BlackRadios.terryo.org

B.8 WJ-954X/CEPT CEPT FORMATTER OPTION

REF DESIG	DESCRIPTION	QTY PER ASSY	MANUFACTURER'S PART NO.	MFR. CODE	RECM VENDOR
	Revision A				
CEPT-A1	CEPT Formatter PC Assembly	1	796820-1	14632	
CEPT-J1	Connector, Receptacle	1	225398-7	00779	
CEPT-P1	Connector, Plug, 3 Position	1	102241-1	00779	
CEPT-W1	Cable Assembly	1	382221-1	14632	

Courtesy of http://BlackRadios.terryo.org

B.8.1 TYPE 796820-1 CEPT FORMATTER PC ASSEMBLY

REF DESIG	DESCRIPTION	QTY PER ASSY	MANUFACTURER'S PART NO.	MFR. CODE	RECM VENDOR
	Revision B1				
C1	Capacitor, Ceramic: .033 µF, 10%, 50 V	34	841415-022	14632	
C2 Thru C19	Same as C1				
C20	Capacitor, Ceramic: .10 µF, 10%, 50 VDC	3	841250-25	14632	
C21 Thru C35	Same as C1				
C36	Capacitor, Tantalum: 68 µF, 20%, 6.3 V	1	841293-24	14632	
C37	Capacitor, Tantalum: 6.8 µF, 20%, 6.3 V	1	841293-14	14632	
C38	Same as C20				
C39	Same as C20				
J1	Connector, Receptacle, Header, 3 Pin	1	3-102203-4	00779	
J2	Connector, Header PC Mount, 2 Position	2	68705-102	22526	
J3	Same as J2				
J4	Connector, Header PC Mount, 3 Position	1	68705-103	22526	
JP1	Not Used				
JP2	Not Used				
JP3	Connector, Plug, 2 Socket Jumper	1	ML-100S	51167	
R1	Resistor, Fixed: 1.0 kΩ, 5%, .1 W	11	841414-073	14632	
R2 Thru R9	Same as R1				
R10	Resistor, Fixed: 100 kΩ, 5%, .1 W	16	841414-121	14632	
R11 Thru R23	Same as R10				
R24	Same as R1				
R25	Resistor, Fixed: 2.7Ω, 5%, .1 W	2	841414-011	14632	
R26	Same as R25				
R27	Same as R1				
R28	Same as R10				
R29	Same as R10				
T1	Transformer	1	67115100	80023	
U1	Integrated Circuit, Octal D-Type Flip-Flop	2	74HC574 SOL20	34371	
U2	Integrated Circuit, Quad D-Type Flip-Flop	1	74HC175 SO16	34371	
U3	Integrated Circuit, Dual D-Type Flip-Flop	5	74HC74 SO14	04713	
U4	Integrated Circuit, Quad 2-Input OR	4	74HC32 SO14	02735	
U5	Same as U1				
U6	Integrated Circuit, Quad 2-Input AND	2	74HC08 SO14	02735	
U7	Integrated Circuit, Hex Inverter	1	74HC04 SO14	04713	
U8	Integrated Circuit, Shift Register	2	74HC299 SO20	34371	
U9	Same as U8				

Courtesy of http://BlackRadios.terryo.org

REF DESIG	DESCRIPTION	QTY PER ASSY	MANUFACTURER'S PART NO.	MFR. CODE	RECM VENDOR
U10	Integrated Circuit, Quad 2-Input EX-OR	1	74HC86 SO14	04713	
U11	Same as U3				
U12	Integrated Circuit, Binary Counter	2	74HC161 SO16	02735	
U13	Same as U12				
U14	Same as U4				
U15	Same as U3				
U16	Integrated Circuit, EPROM, Programmed	1	841487	14632	
U17	Integrated Circuit, Down Counter	1	74HC40103 SO16	34371	
U18	Integrated Circuit, Digital Switch	1	MA812PHB	1CT03	
U19	Integrated Circuit, Binary Encoder/Decoder	1	MV1448/BADP	53469	
U20	Integrated Circuit, Analog PCM Line Interface	1	CS61574-IL1	0A384	
U21	Integrated Circuit, Tri-State Transceivers	2	74HC245 S0L20	04713	
U22	Same as U21				
U23	Same as U4				
U24	Integrated Circuit, Quad Buffer/Line Driver	1	74HC125 SO14	34371	
U25	Integrated Circuit, Decoder/Demultiplexer	1	74HC139 SO16	04713	
U26	Integrated Circuit, Magnitude Comparator	1	74HC688 SOL20	02735	
U27	Same as U3				
U28	Same as U4				
U29	Same as U6				
U30	Integrated Circuit, Hex Buffer/Line Driver	2	74HC367 SO16	04713	
U31	Integrated Circuit, D-Type Flip-Flop	2	74HC174 SO16	18722	
U32	Same as U31				
U33	Same as U30				
U34	Integrated Circuit, Decade Counter	1	74HC4017 S016	02735	
U35	Same as U3				

Courtesy of http://BlackRadios.terryo.org

THIS PAGE INTENTIONALLY LEFT BLANK

Courtesy of http://BlackRadios.terryo.org

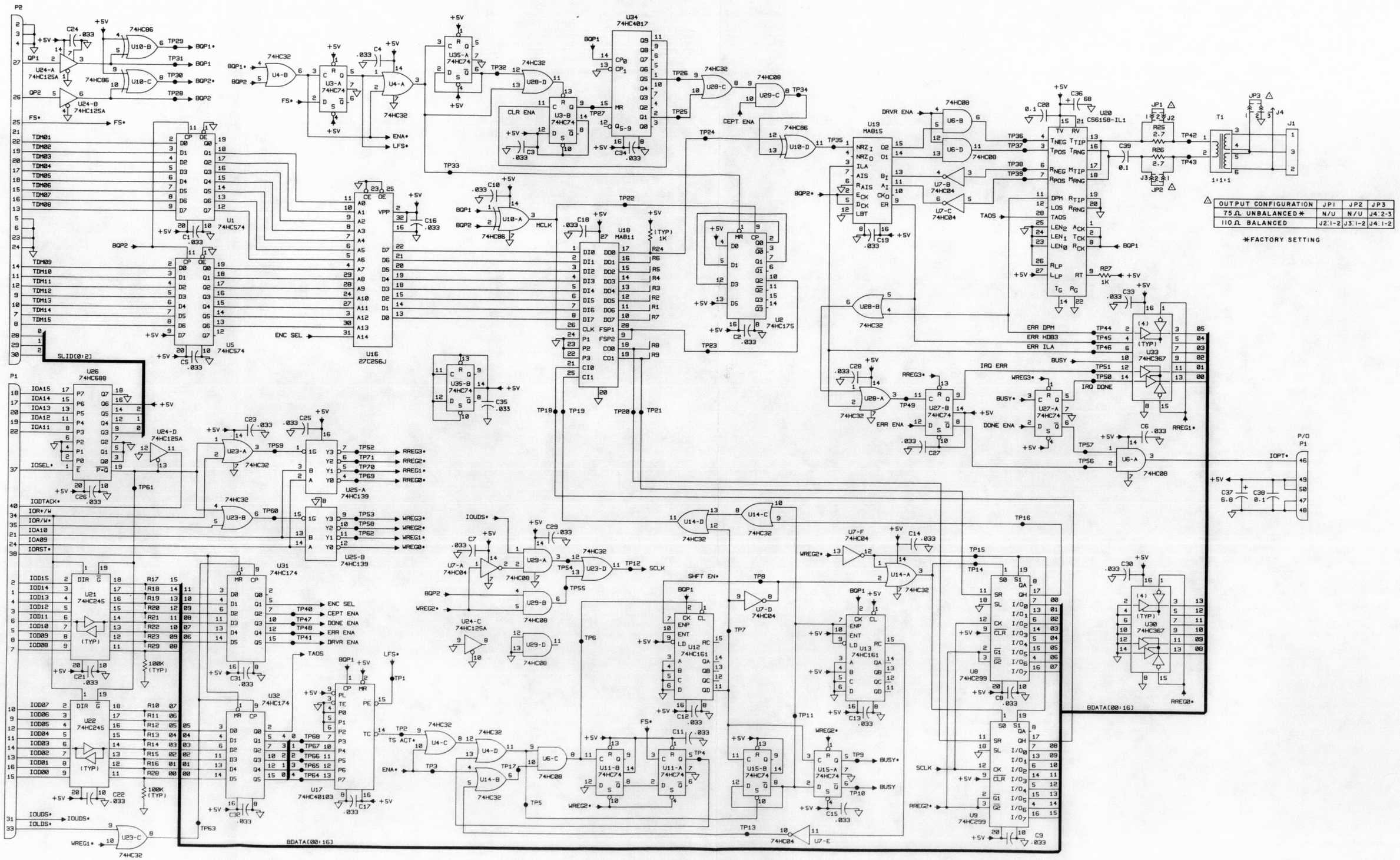

NOTES:
1. UNLESS OTHERWISE SPECIFIED:
   A) RESISTANCE IS IN OHMS, ±5%, 1/8W.
   B) CAPACITANCE IS IN μF.

Figure B-6. Type 796820-1, CEPT Formatter Assembly Schematic Diagram 580970 (A)

Courtesy of http://BlackRadios.terryo.org

APPENDIX C

WJ-954X/AUD 12 CHANNEL AUDIO RECONSTRUCTION OPTION

NOTE

For information on software compatability between this option and the WJ-954X chassis software, refer to Table 1-2 in the WJ-954X base manual.

Copyright © Watkins-Johnson Company 1994
All Rights Reserved

WATKINS-JOHNSON COMPANY
700 QUINCE ORCHARD ROAD
GAITHERSBURG, MARYLAND 20878-1794

November 1994

Courtesy of http://BlackRadios.terryo.org

WARNING

This equipment utilizes voltages which are potentially dangerous and may be fatal if contacted. Exercise extreme caution when working with the equipment with any protective cover removed.

PROPRIETARY STATEMENT

This document and subject matter disclosed herein are proprietary items to which Watkins-Johnson Company retains the exclusive right of dissemination, reproduction, manufacture and sale.

This document is provided to the individual or using organization for their use alone in the direct support of the associated equipment unless permission for further disclosure is expressly granted in writing.

Courtesy of http://BlackRadios.terryo.org

TABLE OF CONTENTS

APPENDIX C

Paragraph		Page
C.1	Electrical Characteristics	C-1
C.2	Mechanical Characteristics	C-1
C.3	Installation	C-1
C.3.1	Audio Output Connector	C-2
C.4	Operation	C-3
C.4.1	Local Operations	C-3
C.4.1.1	Selecting the WJ-954X/AUD Option for Control	C-3
C.4.2	Remote Operations	C-5
C.4.2.1	Selecting the WJ-954X/AUD Option for Control	C-5
C.4.2.2	Selecting Demodulators to Provide the Audio Outputs	C-6
C.4.2.3	Setting the Common Audio Gain Value	C-6
C.5	Reference Designation Prefix	C-6
C.6	List of Manufacturers	C-6
C.7	Parts List	C-7
C.8	WJ-954X/AUD 12 Channel Audio Reconstruction Option	C-9
C.8.1	Type 796844-1 Audio Reconstruction PC Assembly	C-10

LIST OF TABLES

Table		Page
C-1	Remote Commands for the WJ-954X/AUD Option	C-5

LIST OF ILLUSTRATIONS

Figure		Page
C-1	Location of the Audio Reconstruction Output Connector	C-2
C-2	Pin Assignments for the 12 Channel Audio Reconstruction Output Connector	C-2
C-3	Main Menu Display	C-3
C-4	Selecting the WJ-954X/AUD Option for Control	C-3
C-5	12 Channel Audio Display	C-4
C-6	Selecting a Demodulator for an Audio Channel	C-4
C-7	Type 796844-1, Audio Reconstruction Assembly Schematic Diagram 580984	C-17

Courtesy of http://BlackRadios.terryo.org

APPENDIX C

WJ-954X/AUD 12 CHANNEL AUDIO RECONSTRUCTION OPTION

Courtesy of http://BlackRadios.terryo.org

APPENDIX C

WJ-954X/AUD 12 CHANNEL AUDIO RECONSTRUCTION OPTION

C.1 ELECTRICAL CHARACTERISTICS

The WJ-954X/AUD 12 Channel Audio Reconstruction option provides twelve, high-fidelity, voice-grade channel (VGC) analog outputs of 175-3850 Hz. It is designed for use with units of the WJ-954X series, e.g., WJ-9548, WJ-9543, etc.

Each audio channel can be directed to provide audio from the output of any VGC demodulator installed in the WJ-954X. When this option is installed in a WJ-954X that is connected in a "stack" configuration, each audio channel can be directed to provide audio signals from the output of any demodulator installed in any frame in the stack. See **paragraph 2.2.5** in the WJ-954X Instruction Manual for more details on "stacked" configurations.

The WJ-954X is designed so that two WJ-954X/AUD options can be installed simultaneously, providing 24 channels of audio outputs.

Audio channel, common audio gain, frame, and demodulator selections can be made locally via the front panel controls and displays of the WJ-954X, or remotely via commands sent from an external controller over the IEEE-488 Interface bus.

The 12 Channel Audio Reconstruction option retrieves the selected voice grade channel data from the WJ-954X's internal TDM data bus. The option's internal circuitry then reconstructs the digital data into analog audio form, which is then routed to a standard D-type 25-pin connector that is mounted on the rear panel of the WJ-954X when the option is installed.

C.2 MECHANICAL CHARACTERISTICS

The WJ-954X/AUD option consists of a Audio Reconstruction PC Assembly (WJ P/N 796844-1), a Cable Assembly (WJ P/N 382198-1), and a cable marking kit.

The PC assembly can be installed in any of the vacant option slots in the WJ-954X's chassis. The cable assembly includes a D-type 25-pin connector that attaches to the rear panel of the unit. The other end of the cable attaches to the PC assembly. A plate, which identifies the AUD option and its slot configuration, is installed on the rear panel directly below the cable assembly's 25-pin connector. Correspondingly, a decal is affixed to the other end of the cable assembly that links the Audio Reconstruction PC assembly to the rear panel.

C.3 INSTALLATION

Figure C-1 shows the location of the D-type 25-pin connector included with the WJ-954X/AUD option which provides the twelve audio outputs. If one WJ-954X/AUD option is installed, this connector is attached in the top connector slot. If two WJ-954X/AUD options are installed, the lower connector slot is used for the second option 25-pin connector.

Courtesy of http://BlackRadios.terryo.org


```
OPT SLOT: 2          12 CHAN AUDIO      ATTEN: 00
01    OFF    1.00 |  02    OFF    1.00
03    OFF    1.00 |  04    OFF    1.00
05    OFF    1.00 |  06    OFF    1.00
07    OFF    1.00 |  08    OFF    1.00
09    OFF    1.00 |  10    OFF    1.00
11    OFF    1.00 |  12    OFF    1.00
OPER: SCROLL, EXIT
```

Figure C-5. 12 Channel Audio Display

The left-hand column of numbers on the display indicates an audio channel. The right-hand column of numbers are used to select the frame (if in a stack setup) and the demodulator. If the unit is not in a stack setup, only two digits are displayed to select the demodulator number. On the upper right-hand side of the display the ATTEN field is used to set the gain value applied simultaneously to all twelve audio outputs.

The ATTEN value shown on the top line is accessible via the cursor knob. Once selected, the ATTEN value may be edited by the edit knob or by the numeric keypad. The ATTEN values range from 00 to 30, where 30 represents 30 dB attenuation of all audio signals and 00 represents 0 dB attenuation of all audio signals.

In **Figure C-5** each channel is defaulted to demodulator 00 which indicates a demodulator is not selected and the audio channel is turned off, as indicated by OFF. Move the cursor to the frame and demodulator fields and use the EDIT control to select the frame (1-8) and the demodulator within the frame (01-24). Entering a demodulator number selects the demodulator and causes OFF to be replaced with DEMOD (see **Figure C-6**). This indicates that a demodulator is providing voice-grade data for the audio channel and the audio is present at the rear panel. The optional Group-Band demodulators of the WJ-9543 can only be used if they are set to the VGC mode. In Group mode, no audio is available.

```
OPT SLOT: 2          12 CHAN AUDIO      ATTEN: 00
01  DEMOD  1.04 |  02    OFF    1.00
03    OFF  1.00 |  04    OFF    1.00
05    OFF  1.00 |  06    OFF    1.00
07    OFF  1.00 |  08    OFF    1.00
09    OFF  1.00 |  10    OFF    1.00
11    OFF  1.00 |  12    OFF    1.00
OPER: SCROLL, EXIT
```

Figure C-6. Selecting a Demodulator for an Audio Channel

Once the demodulator selections for audio channels are made, move the cursor to the EXIT field and push the CURSOR control to return the display to the Option Configuration Menu.

Courtesy of http://BlackRadios.terryo.org

C.4.2 REMOTE OPERATIONS

Table C-1 lists the commands and queries used for remote control of the WJ-954X/AUD option. Command arguments are accepted as forgiving numeric representation (nrf); response formats are provided as numeric response integers (nr1). See **paragraph 2.6.2** in the WJ-9548 or WJ-9543 Instruction Manual for further details on numeric data representation.

Table C-1. Remote Commands for the WJ-954X/AUD Option

Command	Response	Description
OPS nrf		Select the option slot number for configuration changes. See **paragraph C.4.2.1.** Range: 1 to 4
OPS?	OPS nr1	Request the current selected option slot number. Response example: OPS 2 Reset value: 1
ASG nrf,nrf,nrf		Set the channel number (first argument), the frame number (second argument), and the demodulator number (third argument). The set demodulator within the set frame provides audio to the set audio channel. Channel range: 1 to 12 Frame range: 0 to 8 Demodulator range: 0 to 24 (0 turns off the audio channel)
ASG nrf?	ASG nr1,nr1,nr1	Request the frame (second response) and the demodulator (third response) for the audio channel specified by nrf. Response example: ASG 12,0,02
ATN nrf		Set the common audio gain value in dB. Range: 0 to 30
ATN?	ATN nr1	Request the current common audio gain value. Response example: ATN 15 Default: ATN 0

C.4.2.1 Selecting the WJ-954X/AUD Option for Control

Before demodulators can be selected to provide audio outputs, the 12 Channel Audio option must first be selected for configuration changes. The OPS command and argument is used to select option slots 1, 2, 3, or 4. This command must always precede, on the same program line, any /AUD option command intended for slots 2, 3, or 4. If a slot number is not specified on the program line, the WJ-954X directs the command to the option in slot 1. Each remote command on

Courtesy of http://BlackRadios.terryo.org

the program line should be delimited with a semicolon. Before selecting the option, it can first be determined in which of the four option slots the Audio Reconstruction option is located (*OPT?). Then send the OPS command with an argument of 1, 2, 3, or 4 (as determined by option slot location) followed by a semicolon and the rest of the program line. Subsequent to processing a command line, the WJ-954X would return to its control of slot 1. See the main manual for more information on the *OPT? query.

C.4.2.2 Selecting Demodulators to Provide the Audio Outputs

The ASG command and three arguments are used to select a demodulator to provide audio for one of the twelve audio channels. The first argument is used to select the audio channel from 1 to 12. The second argument is used to select the frame number in which the demodulator is located. If the unit is in a stack setup, the argument can be any number from 1 to 8. If the unit is a stand-alone, 0 is to be entered for the frame number. The third argument is used to select the demodulator number, from 1 to 24. In the WJ-9543, only 1 thru 14 are valid demodulator numbers. An audio channel can be turned off by sending 00 in the demodulator argument.

The ASG nrf? query can be used to determine the currently selected demodulator for an audio channel (nrf is the audio channel number from 1 to 12). The response to this query consists of three arguments. The first argument is the audio channel number requested, the second is the frame number (0-8) where the demodulator is located, and the third argument is the demodulator number (0 to 24).

C.4.2.3 Setting the Common Audio Gain Value

The ATN command and one argument is used to set the common audio gain level. This level controls the gain of all of the audio outputs of the unit. The argument is used to set the gain level in dB from 0 to 30 where 0 corresponds to the greatest amount of gain and 30 to the least.

The ATN? query can be used to determine the current common audio gain level. The response to this query is made up of one argument that will range from 0 to 30. A response of 0 indicates the greatest amount of gain, and a 30 response indicates the least amount of common audio gain.

C.5 REFERENCE DESIGNATION PREFIX

The use of partial reference designations are used on the equipment and on the manual illustrations. This partial reference designation consists of the component type letter(s) and the identifying component number. The complete reference designation may be obtained by placing the proper prefix before the partial reference designation. Reference designation prefixes are included on the drawings and illustrations in the figure titles (in parenthesis).

C.6 LIST OF MANUFACTURERS

No additional manufacturers are required for the parts covered in this appendix, compared to those that are used for the base unit. See the base manual for a complete list of manufacturers, including those associated with the replacement parts listed in this appendix.

Courtesy of http://BlackRadios.terryo.org

C.7 PARTS LIST

The following parts lists contain all the electrical components used in this option, along with mechanical parts which may be subject to unusual wear or damage. For a comprehensive listing of all parts and a list of manufacturers, refer also to the base manual. When ordering replacement parts from the Watkins-Johnson Company, specify the unit type, the serial number, and the option configuration. Also include the reference designation and the description of each item ordered. The list of manufacturers, provided in **paragraph C.6**, and the manufacturer's part number, provided in **paragraph C.8**, are supplied as a guide to aid the user of the equipment while in the field. The parts listed may not necessarily be identical with the parts installed in the unit. The parts listed in **paragraph C.8** will provide for satisfactory unit operation.

Replacement parts may be obtained from any manufacturer provided that the physical characteristics and electrical parameters of the replacement item are compatible with the original part. In the case where components are defined by a military or industrial specification, a vendor which can provide the necessary component is suggested as a convenience to the user.

NOTE

As improvements in semiconductors are made, it is the policy of Watkins-Johnson to incorporate them in proprietary products. As a result, some transistors, diodes and integrated circuits which are installed in the unit may not agree with the parts lists or schematic diagrams of this manual. However, substitution of the semiconductor devices listed in this manual may be substituted with satisfactory results.

Courtesy of http://BlackRadios.terryo.org

THIS PAGE INTENTIONALLY LEFT BLANK

Courtesy of http://BlackRadios.terryo.org

C.8 WJ-954X/AUD 12 CHANNEL AUDIO RECONSTRUCTION OPTION

REF DESIG	DESCRIPTION	QTY PER ASSY	MANUFACTURER'S PART NO.	MFR. CODE	RECM VENDOR
	Revision A				
AUD-A1	Audio Reconstruction PC Assembly	1	796844-1	14632	
AUD-W1	Cable Assembly, Ribbon	1	382198-1	14632	
	Connector 25 Pin	1	FDB25F2S500X	28198	
	Accessory Items				
AI-W2	Cable Assembly, External	1	482164-1	14632	

Courtesy of http://BlackRadios.terryo.org

C.8.1 TYPE 796844-1 AUDIO RECONSTRUCTION PC ASSEMBLY

REF DESIG	DESCRIPTION	QTY PER ASSY	MANUFACTURER'S PART NO.	MFR. CODE	RECM VENDOR
	Revision E1				
C1	Capacitor, Ceramic: .033 µF, 10%, 50 V	71	841415-022	14632	
C2	Capacitor, Ceramic: .10 µF, 10%, 50 VDC	12	841250-25	14632	
C3 Thru C15	Same as C1				
C16	Capacitor, Ceramic: 22 pF, 2%, 50 V	12	841416-033	14632	
C17	Capacitor, Ceramic: 680 pF, 2%, 50 V	12	841416-069	14632	
C18	Same as C2				
C19	Same as C1				
C20	Same as C2				
C21	Same as C16				
C22	Same as C17				
C23 Thru C26	Same as C1				
C27	Same as C16				
C28	Same as C1				
C29	Same as C1				
C30	Same as C17				
C31	Same as C1				
C32	Same as C2				
C33	Same as C16				
C34	Same as C17				
C35 Thru C42	Same as C1				
C43	Capacitor, Tantalum: 3.3 µF, 20%, 16 V	4	841293-10	14632	
C44	Same as C2				
C45 Thru C48	Same as C1				
C49	Same as C43				
C50	Capacitor, Tantalum: 6.8 µF, 20%, 6.3 V	5	841293-14	14632	
C51	Same as C50				
C52	Same as C16				
C53	Same as C1				
C54	Same as C17				
C55	Same as C1				
C56	Same as C2				
C57	Same as C16				
C58	Same as C17				
C59 Thru C61	Same as C1				
C62	Same as C50				
C63	Same as C1				

Courtesy of http://BlackRadios.terryo.org

REF DESIG	DESCRIPTION	QTY PER ASSY	MANUFACTURER'S PART NO.	MFR. CODE	RECM VENDOR
C64	Same as C1				
C65	Capacitor, Tantalum: 1.0 µF, 20%, 16 V	8	841293-04	14632	
C66 Thru C71	Same as C1				
C72 Thru C74	Same as C65				
C75	Same as C2				
C76 Thru C80	Same as C1				
C81	Same as C17				
C82	Same as C1				
C83	Same as C16				
C84	Same as C2				
C85	Same as C2				
C86	Same as C1				
C87	Same as C16				
C88	Same as C17				
C89	Same as C1				
C90	Same as C1				
C91	Same as C17				
C92	Same as C1				
C93	Same as C16				
C94	Same as C2				
C95	Same as C1				
C96	Same as C1				
C97	Same as C16				
C98	Same as C17				
C99	Same as C1				
C100	Same as C43				
C101	Same as C1				
C102	Same as C2				
C103	Same as C1				
C104	Same as C1				
C105	Same as C43				
C106	Same as C50				
C107	Same as C50				
C108	Same as C1				
C109	Same as C17				
C110	Same as C1				
C111	Same as C16				
C112	Same as C2				
C113	Same as C1				
C114	Same as C1				

Courtesy of http://BlackRadios.terryo.org

REF DESIG	DESCRIPTION	QTY PER ASSY	MANUFACTURER'S PART NO.	MFR. CODE	RECM VENDOR
C115	Same as C16				
C116	Same as C17				
C117	Same as C65				
C118 Thru C120	Same as C1				
C121 Thru C123	Same as C65				
C124	Same as C1				
C125 Thru C127	Not Used				
CR1	Diode, Switch Pin	1	MMBD700LT1	04713	
J1	Connector, Strip, 24 Position	1	282316-1	14632	
J2	Connector, Header, PC Mount, 3 Position	1	68705-103	22526	
L1	Not Used				
R1	Resistor, Fixed: 470 kΩ, 5%, .1 W	12	841414-137	14632	
R2	Resistor, Fixed: 100 kΩ, 5%, .1 W	28	841414-121	14632	
R3	Same as R2				
R4	Same as R2				
R5	Resistor, Fixed: 560Ω, 5%, .1 W	12	841414-067	14632	
R6 Thru R9	Same as R5				
R10	Resistor, Fixed: 1.5 MΩ, 5%, .1 W	12	841414-149	14632	
R11	Same as R10				
R12 Thru R16	Same as R2				
R17	Same as R5				
R18	Resistor, Fixed: 270 kΩ, 5%, .1 W	12	841414-131	14632	
R19	Resistor, Fixed: 68 kΩ, 5%, .1 W	12	841414-117	14632	
R20	Resistor, Fixed: 27 kΩ, 5%, .1 W	12	841414-107	14632	
R21	Same as R1				
R22	Same as R1				
R23	Same as R10				
R24	Same as R18				
R25	Same as R20				
R26	Same as R19				
R27 Thru R33	Same as R2				
R34	Same as R18				
R35	Same as R20				
R36	Same as R10				
R37	Same as R1				

Courtesy of http://BlackRadios.terryo.org

REF DESIG	DESCRIPTION	QTY PER ASSY	MANUFACTURER'S PART NO.	MFR. CODE	RECM VENDOR
R38	Same as R18				
R39	Same as R20				
R40 Thru R45	Same as R2				
R46	Same as R19				
R47	Same as R1				
R48	Same as R10				
R49	Same as R19				
R50 Thru R54	Same as R2				
R55	Resistor, Fixed: 22Ω, 5%, .1 W	2	841414-033	14632	
R56	Same as R2				
R57	Resistor, Fixed: 10 kΩ, 5%, .1 W	2	841414-097	14632	
R58	Resistor, Fixed: 10Ω, 5%, .1 W	4	841414-025	14632	
R59	Same as R58				
R60	Resistor, Fixed: 2.2Ω, 5%, .1 W	4	841414-009	14632	
R61	Same as R60				
R62	Same as R18				
R63	Same as R19				
R64	Same as R20				
R65	Same as R10				
R66	Same as R1				
R67	Same as R18				
R68	Same as R20				
R69	Same as R19				
R70	Same as R2				
R71	Same as R55				
R72	Same as R1				
R73 Thru R77	Same as R5				
R78	Same as R10				
R79	Same as R5				
R80	Same as R20				
R81	Same as R18				
R82	Same as R19				
R83	Same as R1				
R84	Same as R10				
R85	Same as R10				
R86	Same as R1				
R87	Same as R20				
R88	Same as R18				

Courtesy of http://BlackRadios.terryo.org

REF DESIG	DESCRIPTION	QTY PER ASSY	MANUFACTURER'S PART NO.	MFR. CODE	RECM VENDOR
R89	Same as R19				
R90	Same as R20				
R91	Same as R18				
R92	Same as R10				
R93	Same as R1				
R94	Same as R20				
R95	Same as R18				
R96	Same as R19				
R97	Same as R1				
R98	Same as R10				
R99	Same as R19				
R100	Same as R58				
R101	Same as R58				
R102	Same as R60				
R103	Same as R60				
R104	Same as R20				
R105	Same as R18				
R106	Same as R19				
R107	Same as R10				
R108	Same as R1				
R109	Same as R20				
R110	Same as R18				
R111	Same as R19				
R112	Same as R57				
R113	Not Used				
R114	Not Used				
U1	Integrated Circuit, RAM	2	MT5C6408DJ-35	6Y440	
U2	Same as U1				
U3	Integrated Circuit, Switched Capacitor Filter	12	XR-1016D	52063	
U4	Amplifier	6	MC34002D	04713	
U5	Same as U3				
U6	Integrated Circuit, EPROM, Programmed	1	841521	14632	
U7	Integrated Circuit, Quad Buffer/Line Driver	1	74HC125 SO14	34371	
U8	Integrated Circuit, Quad 2-Input EX - OR	1	74AC86 S014	34371	
U9	Integrated Circuit, Dual D-Type Flip-Flop	3	74HC74 S014	04713	
U10	Integrated Circuit, Line Driver	1	SN75155D	01295	
U11	Integrated Circuit, Quad 2-Input OR	1	74AC32 S014	34371	
U12	Same as U9				
U13	Integrated Circuit, Quad 2-Input NAND	1	74HC00 S014	02735	
U14	Integrated Circuit, Binary Ripple Counter	2	74HC393 S014	34371	
U15	Same as U3				

Courtesy of http://BlackRadios.terryo.org

REF DESIG	DESCRIPTION	QTY PER ASSY	MANUFACTURER'S PART NO.	MFR. CODE	RECM VENDOR
U16	Same as U4				
U17	Same as U3				
U18	Integrated Circuit, Digital Signal Processor	1	XSP56001FE27	04713	
U19	Integrated Circuit, Magnitude Comparator	1	74HC85 SO16	02735	
U20	Integrated Circuit, Hex Inverter	1	74HC04 SO14	04713	
U21	Same as U9				
U22	Integrated Circuit, Decoder/Demultiplexer	2	74HC137 S016	04713	
U23	Same as U3				
U24	Same as U4				
U25	Same as U3				
U26	Integrated Circuit, Hex Buffer/Line Driver	1	74HC365 SO16	07029	
U27	Same as U14				
U28	Integrated Circuit, RAM	1	IDT7143L70J	61772	
U29	Integrated Circuit, D/A Converter	2	AD1856R	24355	
U30	Integrated Circuit, Analog Multiplexer/Demultiplexer	4	74HC4053 SO16	02735	
U31	Same as U30				
U32	Same as U7				
U33	Same as U3				
U34	Same as U4				
U35	Same as U3				
U36	Same as U3				
U37	Same as U4				
U38	Same as U3				
U39	Same as U22				
U40	Same as U3				
U41	Same as U4				
U42	Same as U3				
U43	Same as U29				
U44	Same as U30				
U45	Same as U30				
XU6	Socket, Receptacle, 14 Pos, Single Row	2	SL-114-G-11	55342	
Y1	Not Used				

Courtesy of http://BlackRadios.terryo.org

THIS PAGE INTENTIONALLY LEFT BLANK

Courtesy of http://BlackRadios.terryo.org

NOTES:
1. UNLESS OTHERWISE SPECIFIED:
   A) RESISTANCE IS IN OHMS, ±5%, 1/10W.
   B) CAPACITANCE IS IN μF.
2. * DENOTES COMPONENTS NOT USED IN 796844-2 BD.

Figure C-7. Type 796844-1, Audio Reconstruction Assembly Schematic Diagram 580984 (Sheet 1 of 2) (D)

Courtesy of http://BlackRadios.terryo.org

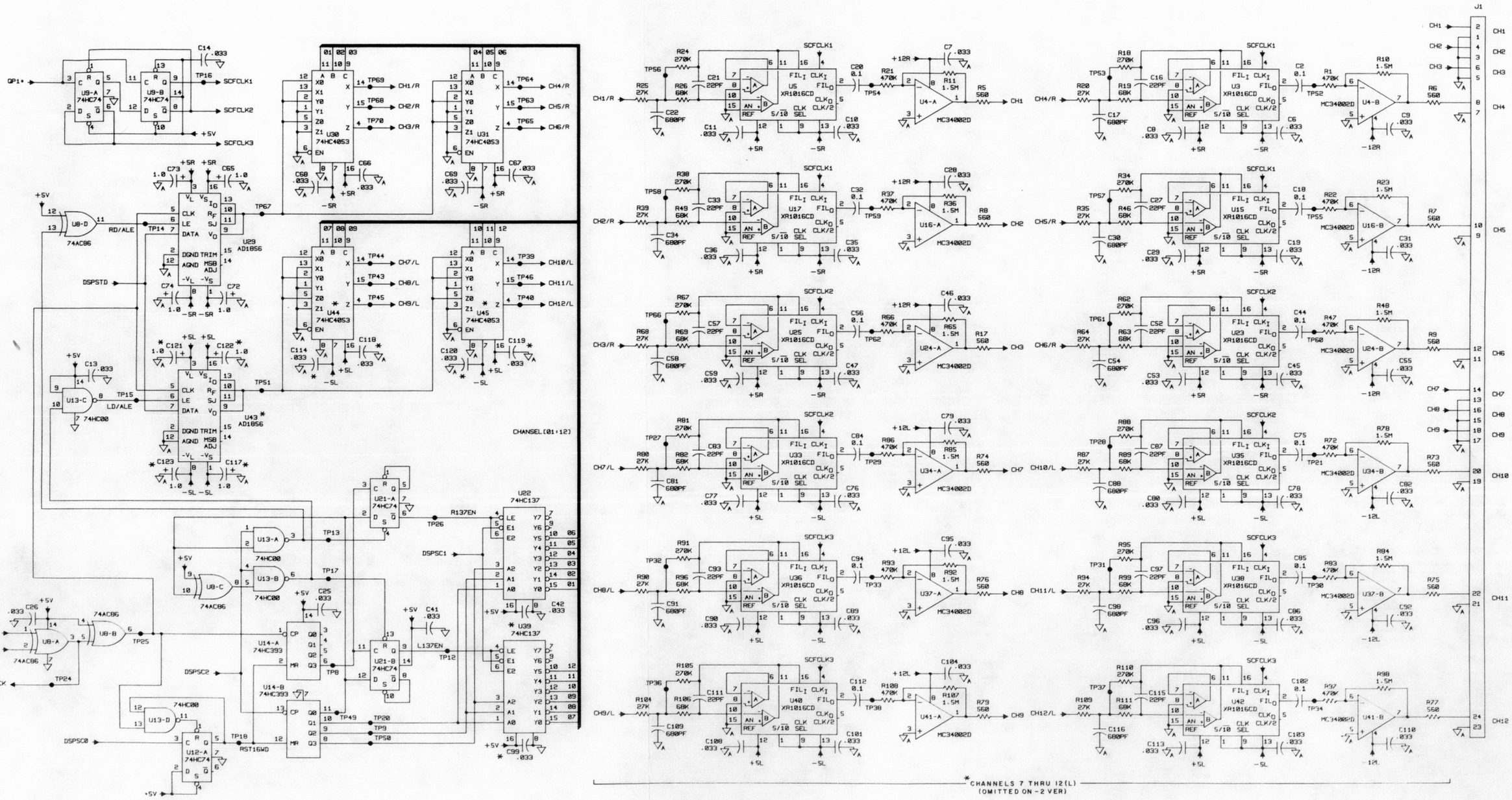

Figure C-7. Type 796844-1, Audio Reconstruction Assembly Schematic Diagram 580984 (Sheet 2 of 2) (D)

Courtesy of http://BlackRadios.terryo.org

APPENDIX D

WJ-954X/FLX FLEXIBLE DEMODULATOR OPTION (INCLUDES WJ-954X/FLX-1 OPTION)

Copyright © Watkins-Johnson Company 1994
All Rights Reserved

NOTE

The WJ-954X/FLX option requires the WJ-954X to be configured with System Software Release 2.0 or higher. The WJ-954X/FLX-1 option requires the WJ-954X to be configured with System Software Release 3.05 or higher. Refer to **Table 1-2** in the WJ-954X Instruction Manual for additional software compatibility information.

WATKINS-JOHNSON COMPANY
700 QUINCE ORCHARD ROAD
GAITHERSBURG, MARYLAND 20878-1794

November 1994

Courtesy of http://BlackRadios.terryo.org

WARNING

This equipment utilizes voltages which are potentially dangerous and may be fatal if contacted. Exercise extreme caution when working with the equipment with any protective cover removed.

PROPRIETARY STATEMENT

This document and subject matter disclosed herein are proprietary items to which Watkins-Johnson Company retains the exclusive right of dissemination, reproduction, manufacture and sale.

This document is provided to the individual or using organization for their use alone in the direct support of the associated equipment unless permission for further disclosure is expressly granted in writing.

Courtesy of http://BlackRadios.terryo.org

WJ-954X/FLX FLEXIBLE DEMODULATOR OPTION

REVISION RECORD

Revision	Description	Date
A	Initial Issue.	4/94
B	Add an OFF setting to EQ tap settings. Change default constellations for several protocols.	5/94
C	Updated parts list.	11/94

Courtesy of http://BlackRadios.terryo.org

TABLE OF CONTENTS

APPENDIX D

WJ-954X/FLX FLEXIBLE DEMODULATOR OPTION

Paragraph		Page
D.1	Electrical Characteristics	D-1
D.2	Mechanical Characteristics	D-1
D.3	Algorithm Description	D-2
D.3.1	FSK Algorithm	D-3
D.3.2	Quadrature Algorithm	D-3
D.3.3	Output Data Format	D-4
D.4	Installation	D-5
D.4.1	Field Installation Procedures for the PC Assembly and the Data Output Cable Assembly (FLX-W1)	D-5
D.4.2	Installing Two, Three, or Four Flexible Demodulators	D-8
D.4.3	Rear Panel Flex Connector Signal Definitions and Applications	D-9
D.4.3.1	Analog Outputs (CH0 and CH1)	D-9
D.4.3.2	RS-232 Serial Data Output	D-11
D.5	Operation	D-11
D.5.1	Local Operations	D-12
D.5.1.1	Selecting the WJ-954X/FLX Option for Control	D-12
D.5.1.2	Configuring the Flexible Demodulator	D-12
D.5.1.2.1	Selecting the Flexible Demodulator Voice Grade Channel Input	D-13
D.5.1.2.2	Setting the Flexible Demodulator Operating Mode	D-15
D.5.1.2.3	Selecting the Demodulator Type	D-15
D.5.1.2.4	Selecting the Modulation Protocol	D-15
D.5.1.2.5	Selecting the Received Character Decoding Format	D-21
D.5.1.2.6	Selecting the Received Character Parity	D-22
D.5.1.2.7	Selecting the Received Bit Polarity	D-22
D.5.1.2.8	Selecting the Analog Outputs	D-22
D.5.1.3	Configuring the RS-232 and Analog Outputs	D-23
D.5.1.3.1	Configuring RS-232 Output Parameters	D-24
D.5.1.3.2	Configuring Analog Output Parameters	D-24
D.5.1.4	Custom Demodulator Configuration	D-25
D.5.1.4.1	Assigning an Identifier to the Custom Demodulator Setup	D-26
D.5.1.4.2	Entering the Demodulation Type	D-26
D.5.1.4.3	Entering Custom FSK Demodulator Parameters	D-27
D.5.1.4.3.1	Entering the Carrier Frequency	D-27
D.5.1.4.3.2	Entering the Baud Rate	D-27
D.5.1.4.3.3	Entering the Mark Frequency Sense	D-27
D.5.1.4.3.4	Entering the FM Deviation	D-27
D.5.1.4.3.5	Copying Parameters from a Standard FSK Demodulator	D-28
D.5.1.4.4	Entering Custom QAM Demodulator Parameters	D-28
D.5.1.4.4.1	Entering the Carrier Frequency	D-28
D.5.1.4.4.2	Entering the Baud Rate	D-28
D.5.1.4.4.3	Entering the Signal Space Constellation	D-29
D.5.1.4.4.4	Entering the Number of Equalizer Taps	D-29
D.5.1.4.4.5	Entering the Differential Decoder Alternative	D-29

Courtesy of http://BlackRadios.terryo.org

TABLE OF CONTENTS (Continued)

APPENDIX D (Continued)

WJ-954X/FLX FLEXIBLE DEMODULATOR OPTION

Paragraph		Page
D.5.1.4.4.6	Enabling or Disabling the Convolutional Decoder	D-35
D.5.1.4.4.7	Entering Derandomizer Taps	D-35
D.5.1.4.4.8	Copying Parameters from a Standard QAM Demodulator	D-36
D.5.1.4.5	Entering Custom OOK Demodulator Parameters	D-36
D.5.1.4.5.1	Entering the Carrier Frequency	D-36
D.5.1.4.5.2	Entering the Baud Rate	D-37
D.5.1.4.5.3	Entering the Signal Threshold Level	D-37
D.5.2	Using the WJ-954X/FLX PC Software Programs to Display FAX and VFT Data	D-37
D.5.2.1	WJFAX PC Program Description and Usage	D-38
D.5.2.1.1	Running the WJFAX Program	D-38
D.5.2.1.2	Saving FAX Data	D-38
D.5.2.1.3	Displaying a Saved FAX	D-41
D.5.2.1.4	Zooming in a Displayed FAX Page Using the Keyboard	D-41
D.5.2.1.5	Zooming in a Displayed FAX Page Using a Mouse	D-43
D.5.2.1.6	Printing a Displayed FAX Page	D-44
D.5.2.2	WJVFT PC Program Description and Usage	D-46
D.5.2.3	RS-232 Output Binary Format for VFT and FAX Demodulation	D-46
D.5.2.3.1	Format for VFT	D-46
D.5.2.3.2	Format for FAX	D-47
D.5.3	Remote Operations	D-48
D.5.3.1	Selecting the WJ-954X/FLX Option for Control	D-48
D.6	Reference Designation Prefix	D-61
D.7	List of Manufacturers	D-61
D.8	Parts List	D-62
D.9	WJ-954X/FLX, /FLX-1 Flexible Demodulator Option	D-63
D.9.1	Type 796927-1 (/FLX), 796927-4 (/FLX-1) Flexible Demodulator PC Assembly	D-64

LIST OF TABLES

Table		Page
D-1	WJ-954X/FLX, /FLX-1 Flexible Demodulator Option Specifications	D-2
D-2	Modem (FSK) Demodulation Protocols and Parameters	D-16
D-3	Modem (QAM) Demodulation Protocols and Parameters	D-17
D-4	VFT (FSK) Demodulation Protocols and Parameters	D-18
D-5	VFT (TDM) Demodulation Protocols and Parameters	D-19
D-6	FAX Demodulation Protocols and Parameters	D-20
D-7	SIGNALLING Demodulation Protocols and ASCII Output	D-21
D-8	Remote Commands for the WJ-954X/FLX Option	D-48

Courtesy of http://BlackRadios.terryo.org

TABLE OF CONTENTS (Continued)

APPENDIX D (Continued)

WJ-954X/FLX FLEXIBLE DEMODULATOR OPTION

LIST OF FIGURES

Figures		Page
D-1	Block Diagram of the FSK Demodulator Algorithm	D-3
D-2	Block Diagram of the Quadrature Demodulator Algorithm	D-4
D-3	Connecting Multiple Flexible Demodulators	D-6
D-4	Location for the Flexible Demodulator Output Connector	D-7
D-5	Field Installation Procedure	D-7
D-6	Pin Assignments for the Flexible Demodulator Output Connector	D-9
D-7	Example of an Eye Diagram	D-10
D-8	Example of a Constellation Display	D-11
D-9	Main Menu Display	D-12
D-10	Option Configuration Menu	D-12
D-11	Example of the Flexible Demodulator Configuration Displays	D-14
D-12	Page Two of the Flexible Demodulator Configuration Display	D-23
D-13	Example of the Custom Demodulator Configuration Display (FSK Type)	D-25
D-14	Example of the Custom Demodulator Configuration Display (QAM Type)	D-28
D-15	Predefined Constellations	D-31
D-16	Differential Decoder Alternatives	D-33
D-17	Convolutional Decoder Block Diagram	D-35
D-18	Flexible Demodulator Tapped Delay Line	D-36
D-19	Example of the Custom Demodulator Configuration Display (OOK Type)	D-37
D-20	Example of the WJFAX Main Display	D-39
D-21	Example of the WJFAX Receive Data Display	D-40
D-22	Example of the WJFAX Zoom Display When Using the Keyboard	D-42
D-23	Example of the WJFAX Zoom Display When Zoomed into a Selected Area	D-43
D-24	Example of the WJFAX Zoom Display When Using the Mouse	D-44
D-25	Example of the WJFAX Print Display	D-45
D-26	Type 796927-1 Flex Demod/Activity Monitor PC Assembly Schematic Diagram 581142	D-69

Courtesy of http://BlackRadios.terryo.org

APPENDIX D

WJ-954X/FLX FLEXIBLE DEMODULATOR OPTION (INCLUDES WJ-954X/FLX-1 OPTION)

NOTE

The WJ-954X/FLX option requires the WJ-954X to be configured with System Software Release 2.0 or higher. The WJ-954X/FLX-1 option requires the WJ-954X to be configured with System Software Release 3.05 or higher. Refer to **Table 1-2** in the WJ-954X Instruction Manual for additional software compatibility information.

Courtesy of http://BlackRadios.terryo.org

APPENDIX D

WJ-954X/FLX FLEXIBLE DEMODULATOR OPTION (INCLUDES WJ-954X/FLX-1 OPTION)

D.1 ELECTRICAL CHARACTERISTICS

This appendix provides details for the WJ-954X/FLX and WJ-954X/FLX-1 Flexible Demodulator options. These options provide the WJ-954X-Series Demultiplexer the capability of demodulating signalling tones and a variety of MODEM, voice frequency teletype (VFT), and facsimile (FAX) signals. Protocols supported are listed in the table of specifications (**Table D-1**). Additional support for nonstandard protocols is provided by the WJ-954X/FLX Flexible Demodulator by allowing the operator to "program" particular demodulator characteristics in a custom configuration display, such as carrier frequency and baud rate (certain restrictions apply). Additionally, OOK demodulation is available in the custom configuration display. For operation, this option requires that the WJ-954X-Series Demultiplexer be configured with System Software Release 2.0 or higher. See **Table 1-2** in the WJ-954X Installation and Operation Manual for exact compatibility requirements.

Outputs from the Flexible Demodulator option include an RS-232 port to output character data, and two analog outputs used to generate eye diagram and constellation displays. In VFT demodulation applications, all VFT channels are demodulated simultaneously, and data from all or selected VFT channels can be output through the RS-232 port. In addition, the analog ports may be used by other equipments for external bit detection and character synchronization.

The Flexible Demodulator option can be controlled locally via the WJ-954X's front panel controls and displays, or remotely via commands sent from a controller over an IEEE-488 bus.

A floppy disc is provided with this option that contains the WJ-954X/FLX PC software programs (WJ P/N 841896). This software provides two programs which can be used to extract and display received character transmission for FAX and VFT signals. The programs require an IBM-compatible computer equipped with a VGA monitor.

D.2 MECHANICAL CHARACTERISTICS

The WJ-954X/FLX option consists of a Type 796927-1 Flexible Demodulator PC Assembly, a Type 382650-1 Cable Assembly, a Type 282770-1 Jumper Cable Assembly used for connecting multiple flexible demodulator assemblies installed in a single unit, and a cable marking kit. The WJ-954X/FLX-1 option consists of the same except for the Type 796927-4 Flexible Demodulator PC Assembly.

The PC assembly can be installed in any vacant option slot in the WJ-954X's chassis. The cable assembly includes a 25-pin D-type connector that attaches to the rear panel of the unit. The other end of the cable attaches to the PC assembly. An identification plate labeled FLEX DEMOD is located on the rear panel directly below the cable assembly's 25-pin connector.

Up to four Flexible Demodulator options may be installed in the WJ-954X, depending on the availability of option slots. Multiple flexible demodulators are interconnected with jumper cable assemblies so that their RS-232 outputs and analog outputs are provided at the single 25-pin D-type connector installed on the rear panel. Multiple flexible demodulators must be installed in adjacent option slots due to jumpering restrictions.

Courtesy of http://BlackRadios.terryo.org

Table D-1. WJ-954X/FLX, /FLX-1 Flexible Demodulator Option Specifications

Demodulator Modes	
Modem (FSK)	Bell 103, 113, 202C, V.21, V.23, V.23 ALT, User Programmable
Modem (QAM) WJ-954X/FLX	Bell 201B, 208A, 212A, V.22, V.22 ALT, V.22bis, V.26A, V.26B, V.26bis, V.26bis ALT, V.26ter, V.26ter ALT, V.27, V.27bis, V.27bis ALT, V.27ter, V.27ter ALT, V.29, V.29 ALT A, V.29 ALT B, V.32, V.32 ALT, V.33, V.33 ALT, User Programmable
Modem (QAM) WJ-954X/FLX-1	Bell 201B, 208A, 212A, V.22, V.22 ALT, V.22bis, V.26A, V.26B, V.26bis, V.26bis ALT, V.26ter, V.26ter ALT, V.27, V.27bis, V.27bis ALT, V.27ter, V.27ter ALT, V.29, V.29 ALT A, V.29 ALT B
VFT (FSK)	R.35, R.35 ALT, R.35bis, R.37, R.37 ALT, R.38A, R.38B, R.39, R.39 ALT 1, R.39 ALT 2
VFT (TDM)	R.101A (50 and 75 baud outputs), R.101B (50, 75, 100, 150, 200 and 300 baud outputs). Demultiplexing applied to following modems: V.26A, V.26B, V.26bis, V.26ter, V.27bis ALT, V.27ter ALT, V.29, V.29 ALT A and V.29 ALT B
FAX	Group 3 (Auto Fallback Tracking, 9600, 7200, 4800, 2400 baud)
CW	User Programmable OOK
Signalling	Q23 (DTMF) and Q.35 (Dial Tone, Ringing, Busy, Call Wait, Pay-Phone Recognition, etc.)
Outputs	
Digital	Asynchronous transmit-only RS-232 serial data at 9.6 or 19.2 kbps, or synchronous serial bit stream commensurate with input data rate.
.....	synchronous RS-232 serial data
Analog	I and Q baseband and symbol synchronization signals used for Eye Diagram and Constellation display
Physical	
Operating Temperature	0 to 50°C
Power	<3 watts

D.3 ALGORITHM DESCRIPTION

The Flexible Demodulator option receives a digitized 4 kHz voice frequency (VF) signal over the WJ-954X internal TDM bus which carries up to 192 channels of VF data. The operator can select any one of these channels for processing by the flexible demodulator.

The flexible demodulator performs one of two basic demodulation algorithms on the selected channel, depending on the demodulation type selected: frequency-shift-keying (FSK) or quadrature amplitude modulation (QAM). All demodulation routines are derivatives of these basic algorithms. The following paragraphs provide further details on the operation of these algorithms.

Courtesy of http://BlackRadios.terryo.org

D.3.1 FSK ALGORITHM

Figure D-1 is a block diagram of the FSK algorithm. The FSK demodulator translates the input signal to baseband where it is filtered to remove signals beyond the channel of interest. The result passes through an FM discriminator and the subsequent video is filtered commensurate with the baud rate. Symbol timing is extracted from the video and the detected bit stream is generated through a threshold detector. The filtered video and symbol timing synchronization signals are also used to generate an eye diagram display on a scope. The eye diagram display information is output at the analog ports of the rear panel's 25-pin connector. User-defined carrier frequency, mark/space frequency, and baud rate provide the facilities for a truly arbitrary FSK demodulator in cases where nonstandard protocols are required.

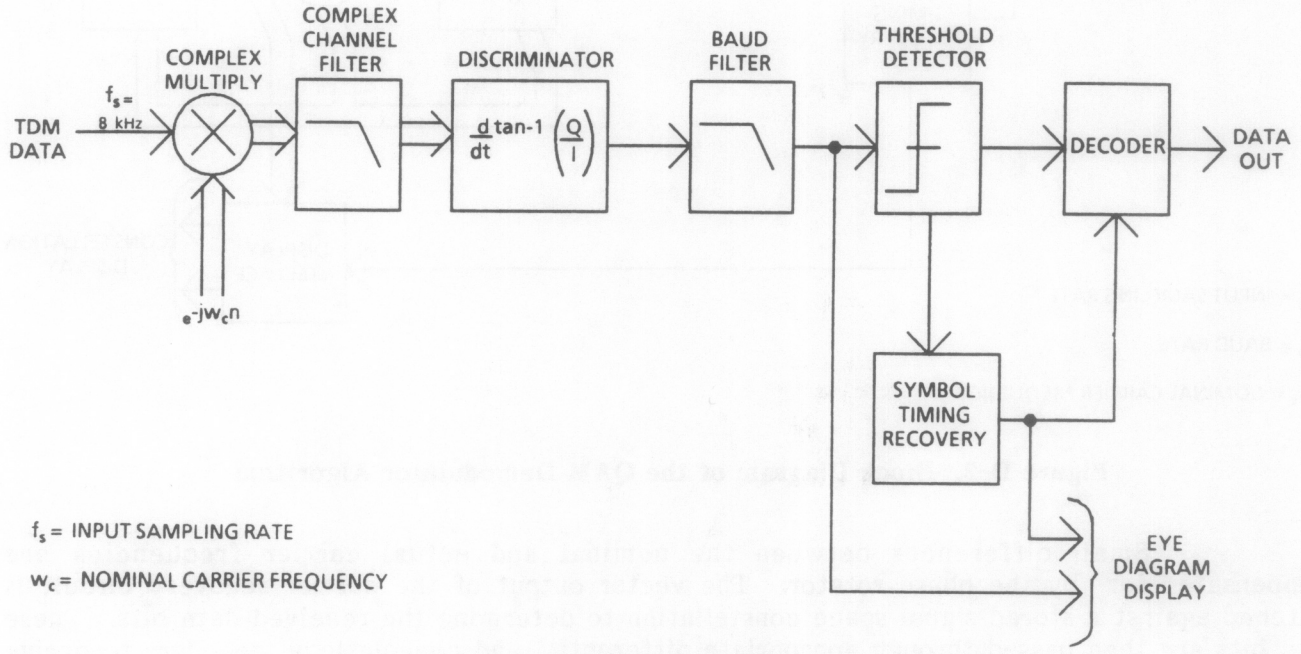

Figure D-1. Block Diagram of the FSK Demodulator Algorithm

D.3.2 QUADRATURE ALGORITHM

Figure D-2 is a block diagram of the quadrature algorithm. The quadrature algorithm immediately interpolates the 8 kHz sampled input to a 9.6 kHz sample rate. This ensures that the sample rate is an integer multiple of the symbols rate (for standard modem products) and is necessary to eliminate phase jitter in the sampling clock. The symbol timing recovery uses a band edge technique to derive the phase of the symbol clock and subsequently adjusts the sampling phase of the input data stream to ensure optimum input sampling. A translation to baseband based on the nominal carrier frequency is performed followed by a decimation filter that removes unwanted signal energy and reduces the sampling rate to four times the symbol rate.

This new data stream enters a fractionally spaced (T/4) adapter equalizer to eliminate inter-symbol interference caused by amplitude and group delay distortions in the transmission channel. The equalizer performs a blind equalization algorithm (i.e., equalization on the information carrying signal) to eliminate the requirement for a training sequence.

Courtesy of http://BlackRadios.terryo.org

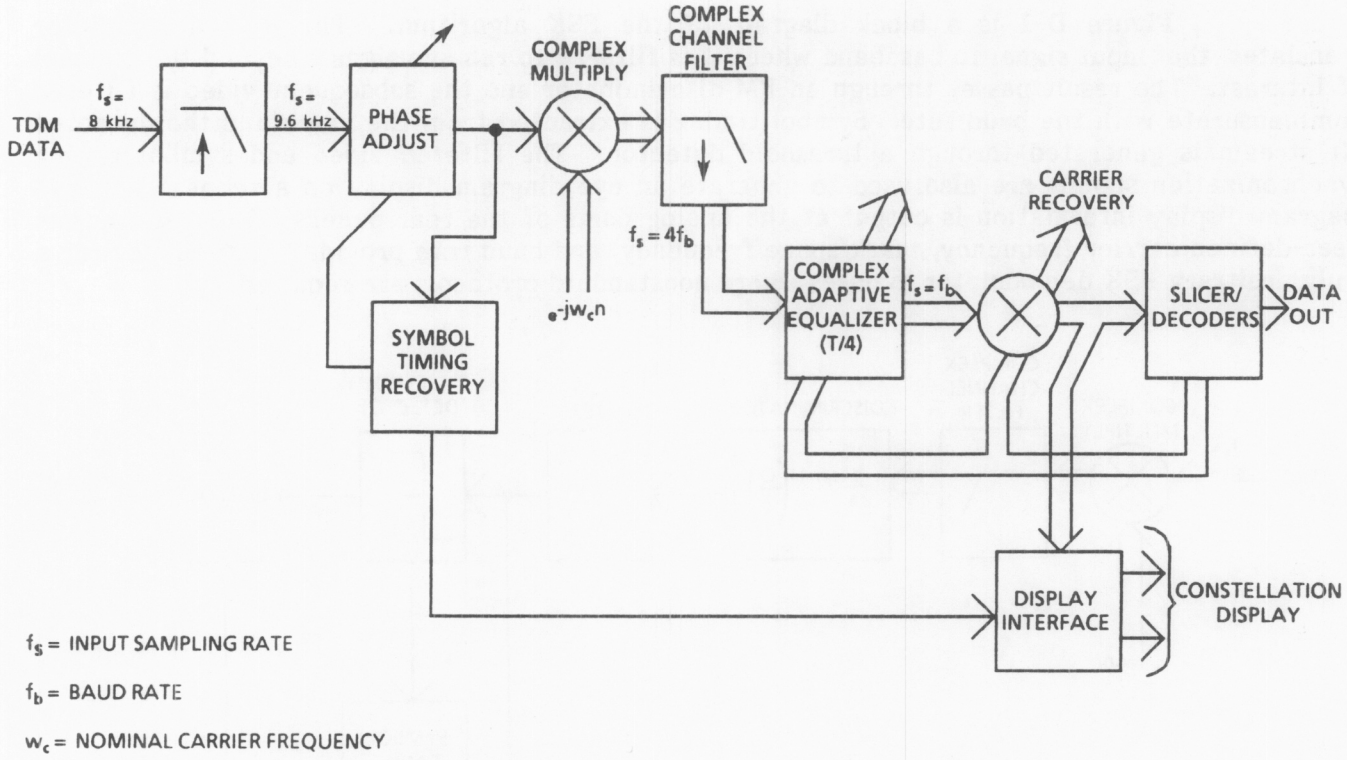

Figure D-2. Block Diagram of the QAM Demodulator Algorithm

Small differences between the nominal and actual carrier frequencies are compensated for by the phase rotator. The vector output of the carrier recovery circuit is matched against a stored signal space constellation to determine the received data bits. These data bits are then passed through appropriate differential and convolutional decoders to derive the original transmitted bit stream. The quadrature demodulator is also capable of generating constellation display data.

D.3.3 OUTPUT DATA FORMAT

For MODEM and VFT signals, the recovered bit stream (from either the FSK or quadrature demodulators) is passed through a character decoder to extract information appropriate for textual display. The character decoder is capable of extracting ASCII, BAUDOT-US, BAUDOT-ITA2, and EBCDIC characters for the recovered bit stream. As an alternative, the raw bit stream can be sent out as binary characters allowing external equipment to perform character extraction. For FAX signals, the coded raw bit stream is output at the RS-232 port of the rear panel connector where it can be connected to and processed by external equipment.

For SIGNALLING tones (telephone coding signals), the baseband signal is passed through a decoder to extract information for textual display. Utilizing the Q.23 protocol, Dual-Tone Multi-Frequency (DTMF) coding is demodulated to interpret touch-tone telephone keypresses. Utilizing the Q.35 protocol, signalling used on the telephone network to identify dial tones, ringing, busy tones, call waiting, special information, etc. is demodulated and interpreted. In both cases, output data at the RS-232 port is formatted as 7-bit ASCII characters.

Courtesy of http://BlackRadios.terryo.org

D.4 INSTALLATION

The WJ-954X/FLX Flexible Demodulator option can be installed at the factory or in the field. For field installation of the option, the existing WJ-954X must be equipped with the Type 796816-3 Control Microprocessor Assembly (A3) and Software Release 2.00 or higher. See **Table 1-2** for Firmware/Software compatibility. Consult the factory for details on equipment upgrades. **Paragraph D.4.1** provides instructions for installing this option in a compatible WJ-954X in the field.

Paragraph D.4.2 provides information when installing more than one WJ-954X/FLX Flexible Demodulator option in the WJ-954X.

Paragraph D.4.3 provides descriptions of the rear panel data output connector and the optional clock input connector and their resident signals.

D.4.1 FIELD INSTALLATION PROCEDURES FOR THE PC ASSEMBLY AND THE DATA OUTPUT CABLE ASSEMBLY (FLX-W1)

Perform the following procedures to install the Flexible Demodulator PC Assembly and the data output cable assembly (FLX-W1).

PC Assembly

1. Loosen 11 retaining screws and remove the top cover from the WJ-954X.
2. Install the Flexible Demodulator PC Assembly in any vacant option slot (A44 thru A47) in the main chassis (see **Figure D-3**). A44 is considered option slot #1, A45 is option slot #2, A46 is option slot #3, and A47 is option slot #4.

Cable FLX-W1

3. Remove 18 screws and remove the bottom cover from the WJ-954X.
4. Remove the blank plate from one of the unused 25-pin D-shell rear panel cutouts. See **Figure D-4.**
5. From the inside of the chassis, feed the connector through the rear panel.
6. Select a FLEX DEMOD identification plate (P/N 282766-X, where X should be a number from 1 to 4 that corresponds to the option slot location of the PC assembly). **(See step 2.)**
7. Install the identification plate over the 25-pin D connector on the outside of the rear panel and install and tighten the hex spacer nuts on the connector.
8. Feed FLX-W1 along the foil-covered padding on the bottom of the unit. Make a single 90° bend, and push up through the opening in the motherboard near the four option slots (see **Figure D-5**).
9. Connect the nine-pin connector of FLX-W1 in connector J1 of the PC assembly (see **Figure D-5**).

Courtesy of http://BlackRadios.terryo.org

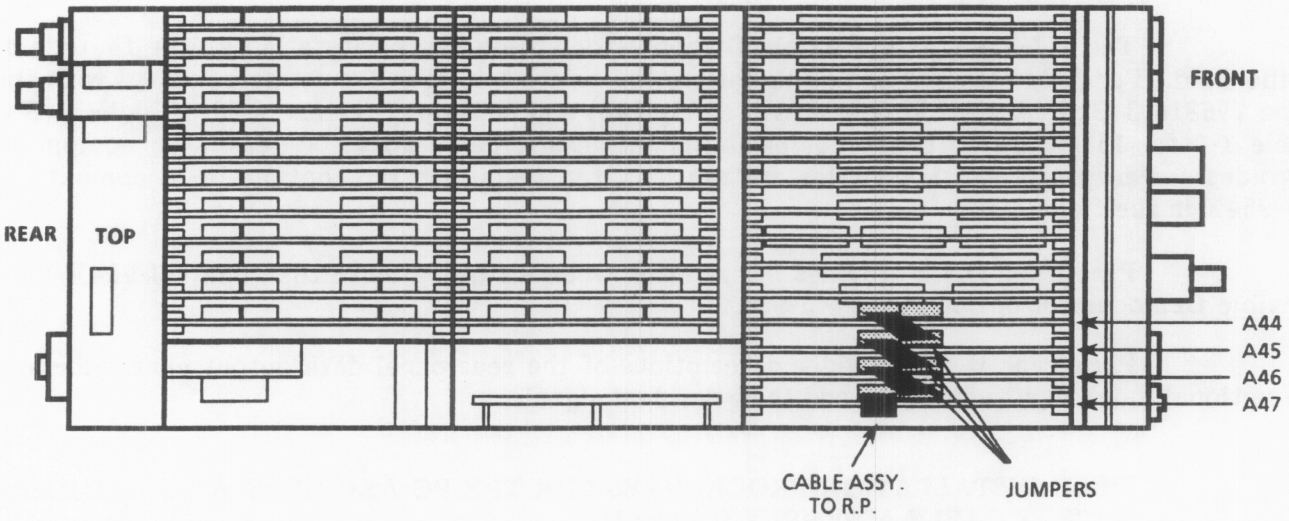

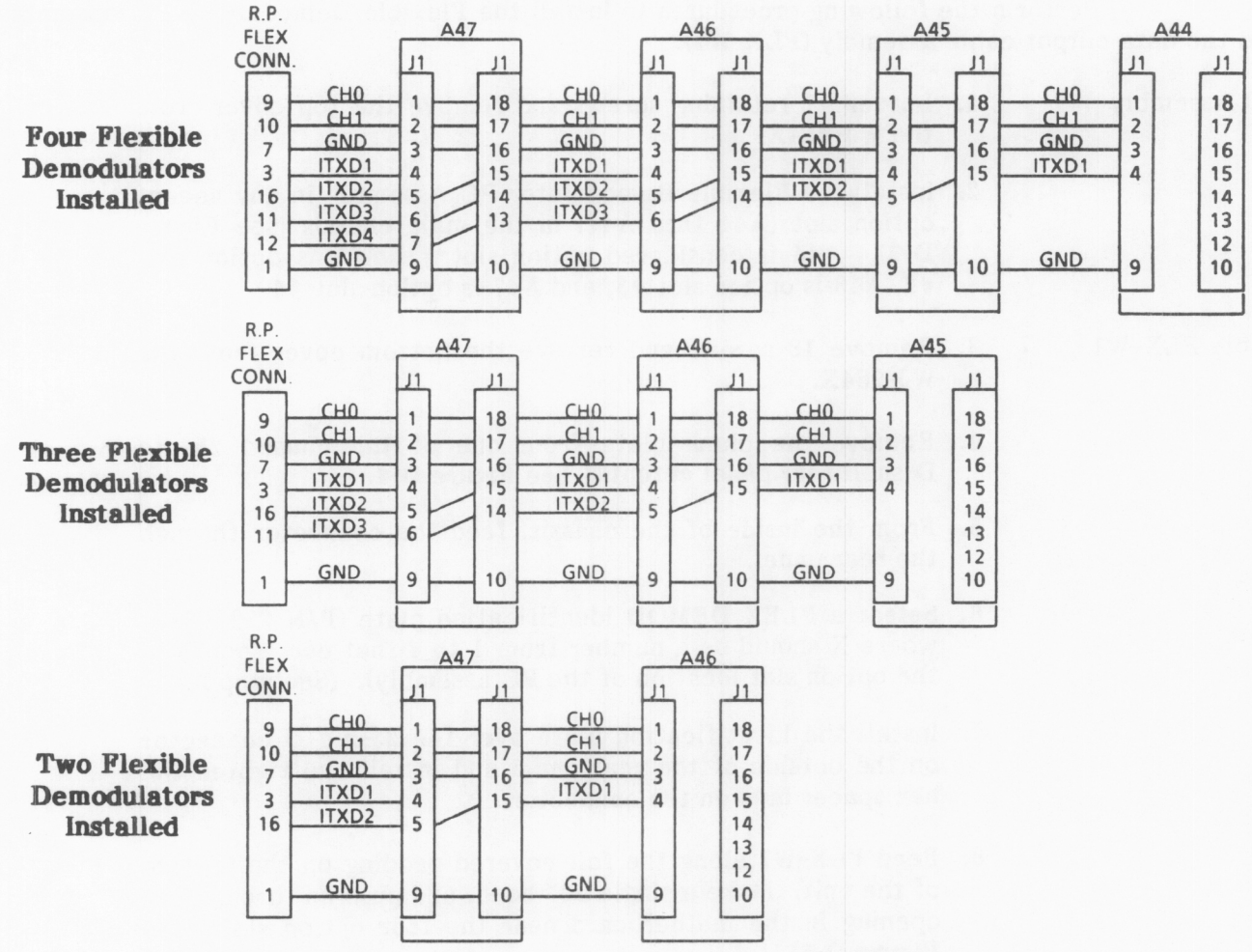

Figure D-3. Connecting Multiple Flexible Demodulators

Courtesy of http://BlackRadios.terryo.org

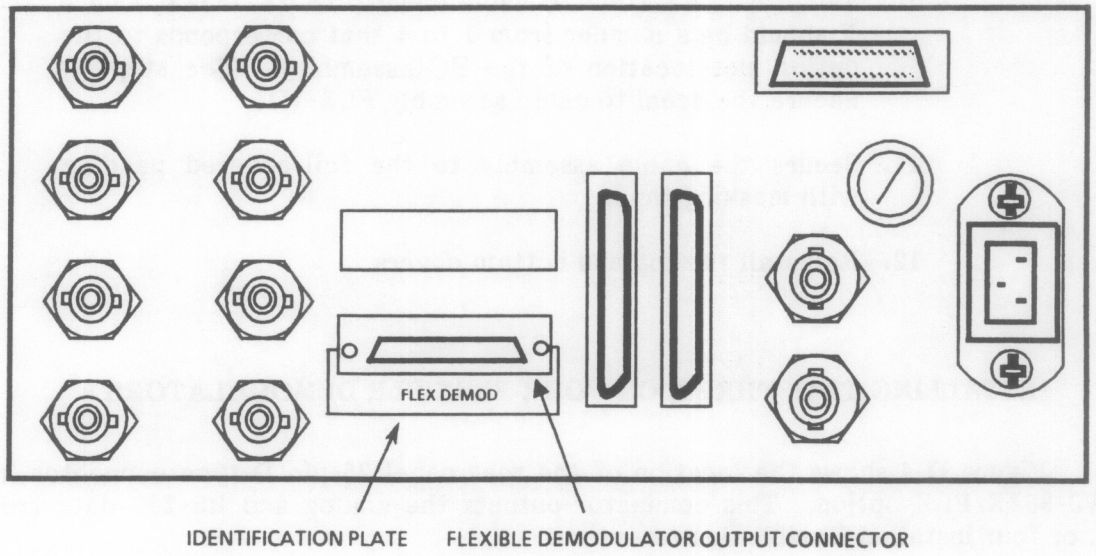

Figure D-4. Location of the Flexible Demodulator Output Connector

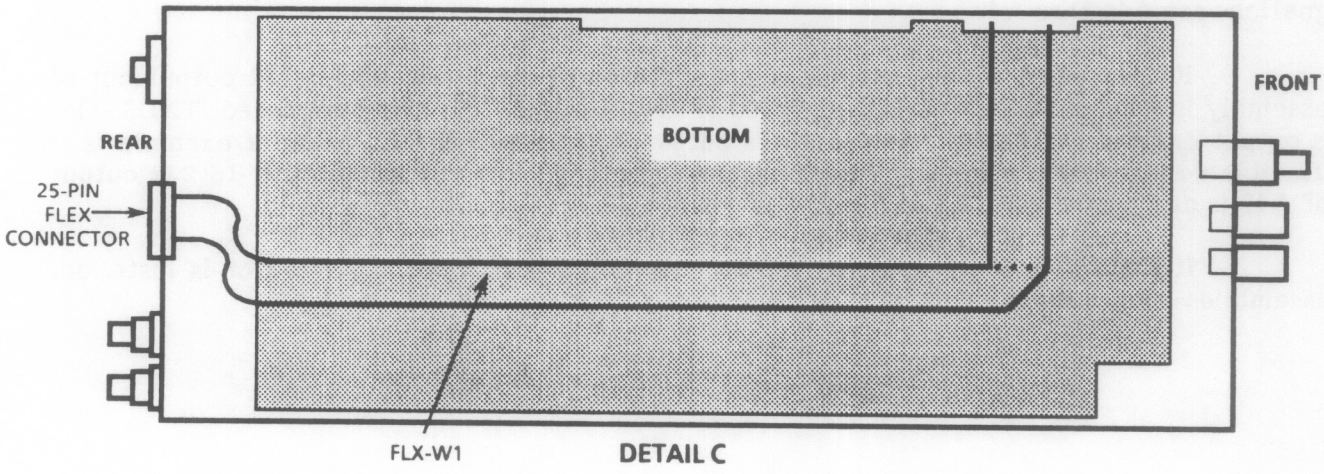

Figure D-5. Field Installation Procedure

Courtesy of http://BlackRadios.terryo.org

10. Select a FLEX DEMOD cable decal (P/N 282767-X, where X should be a number from 1 to 4 that corresponds to the option slot location of the PC assembly). (See **step 2.**) Secure the decal to cable assembly FLX-W1.

11. Secure the cable assembly to the foil-covered padding with masking tape.

12. Reinstall the top and bottom covers

D.4.2 INSTALLING TWO, THREE, OR FOUR FLEXIBLE DEMODULATORS

Figure D-4 shows the location of the rear panel 25-pin D-type connector included with the WJ-954X/FLX option. This connector outputs the analog and RS-232 data from one, two, three, or four installed flexible demodulators.

When more than one flexible demodulator is installed, the Type 282770-1 Jumper Cable Assemblies are used to daisy-chain the outputs of all flexible demodulators to the rear panel 25-pin connector. One jumper cable is required when two flexible demodulators are installed. Two jumper cables are required when three demodulators are installed, and three jumper cables are required when four demodulators are installed. **Figure D-3** illustrates the interconnections required for each possible scenario of installed flexible demodulators.

As shown in the schematic representations in **Figure D-3**, each flexible demodulator has an RS-232 output (ITXDx) and two analog outputs (CH 1 and CH 0). The RS-232 ITXDx signal output of a flexible demodulator is numbered (in place of "x" in ITXDx) according to the assembly's installation sequence in the WJ-954X's option slots. The option slot reference designations are A44 thru A47.

For example, if four flexible demodulators are installed, the RS-232 output out of the assembly installed in slot A44 is designated ITXD4, slot A45's output designated ITXD3, slot A46's output designated ITXD2, and slot A47's output designated ITXD1. Another example is if two flexible demodulators are installed in slots A46 and A47. In this example the RS-232 output out of A47 is designated ITXD1 and the output out of A46 is designated ITXD2.

It should also be noted that when more than one flexible demodulator is installed, the assemblies must occupy adjacent option slots due to jumpering restrictions.

Courtesy of http://BlackRadios.terryo.org

D.4.3 REAR PANEL FLEX CONNECTOR SIGNAL DEFINITIONS AND APPLICATIONS

Figure D-6 shows the pin orientation and pin assignments of the rear panel 25-pin FLEX connector. As previously discussed in **paragraph D.4,** each flexible demodulator assembly provides an RS-232 serial output and two analog outputs. The following paragraphs provide further details of the analog and RS-232 outputs.

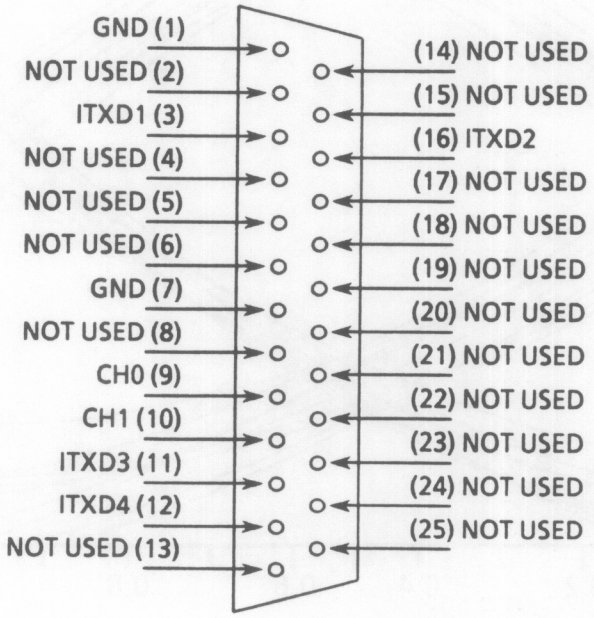

Figure D-6. Pin Assignments for the Flexible Demodulator Output Connector

D.4.3.1 Analog Outputs (CH 0 and CH 1)

The CH 0 and CH 1 signals (pins 9 and 10) are analog outputs used for the generation of eye diagrams and constellation displays as selected by the operator. These outputs can be connected to any oscilloscope equipped with X and Y inputs. Output impedance for both CH 0 and CH 1 analog outputs is 1k ohms.

When an eye diagram is selected for display, the CH 0 signal is the data output while the CH 1 signal is the trigger output used for synchronization. **Figure D-7** is an example of a typical eye diagram shown on an oscilloscope. For eye diagram generation, the CH 0 output should be connected to channel 1 of the oscilloscope and the CH 1 output should be connected to channel 2 of the oscilloscope. The oscilloscope should be set to trigger off of channel 2.

Courtesy of http://BlackRadios.terryo.org

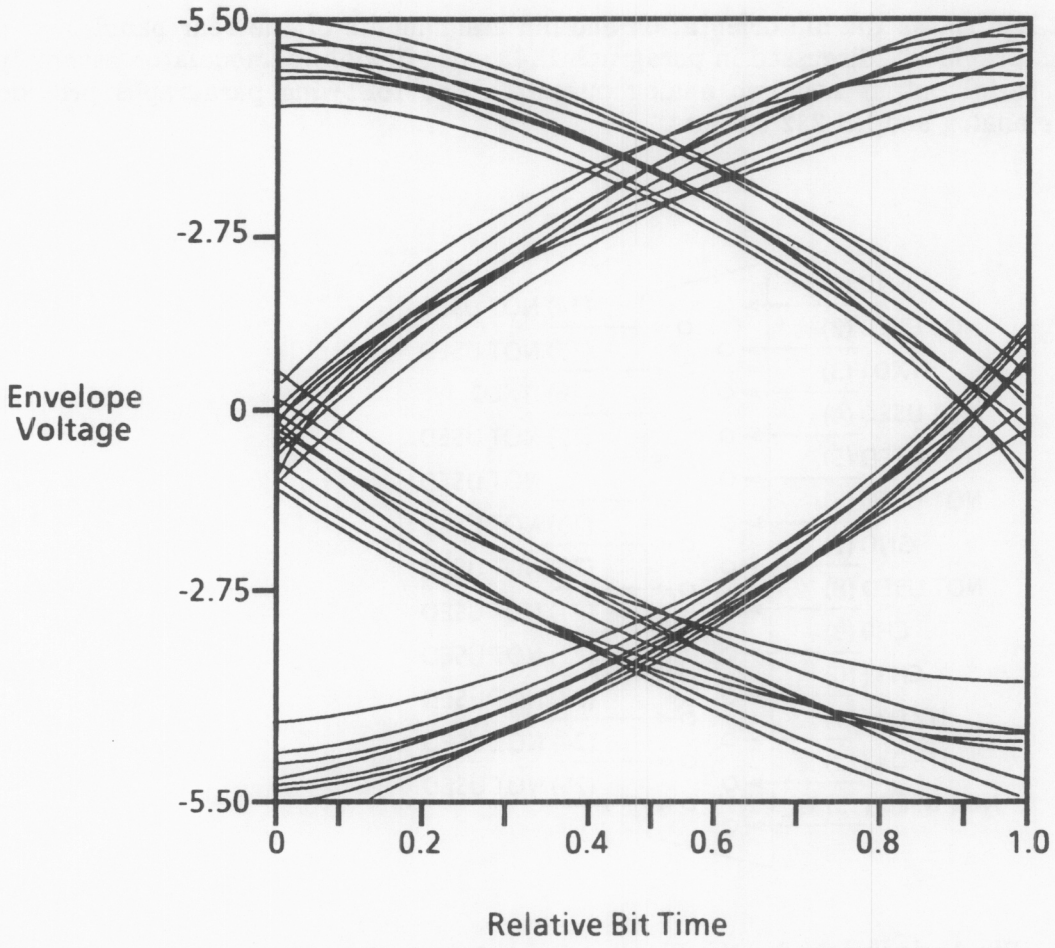

Figure D-7. Example of an Eye Diagram

When constellation is selected for display, the CH 0 output provides the I axis data for the display while the CH 1 output provides the Q axis output for the display. **Figure D-8** is an example of a constellation display shown on an oscilloscope. For constellation display generation, the CH 1 output should be connected to the Y input of the oscilloscope and the CH 0 output should be connected to the X input of the oscilloscope.

When multiple flexible demodulators are installed, the CH 0 and CH 1 outputs carry data only from the flexible demodulator that is currently selected by the operator.

Courtesy of http://BlackRadios.terryo.org

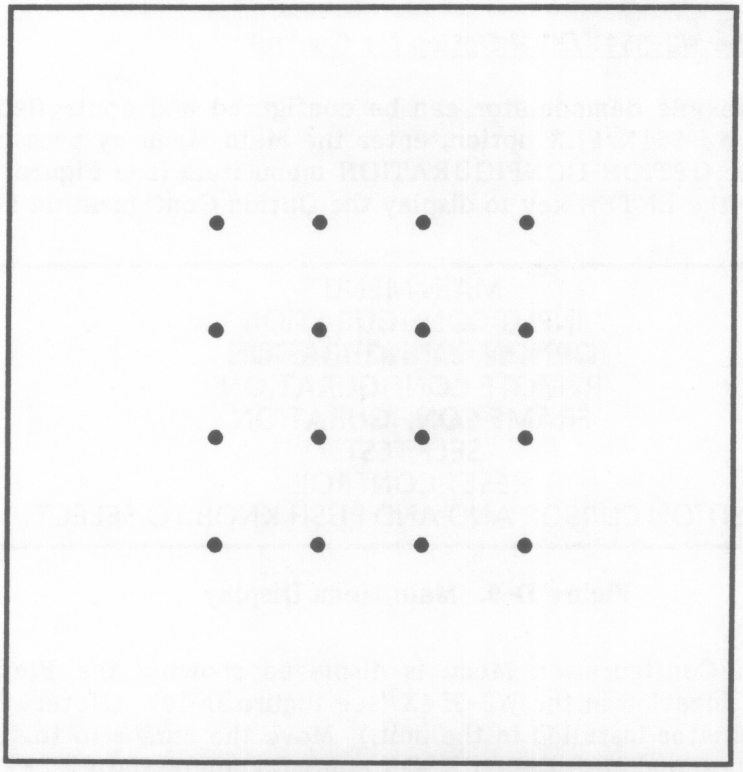

Figure D-8. Example of a Constellation Display

D.4.3.2 **RS-232 Serial Data Output**

The RS-232 outputs, ITXD1 thru ITXD4 (pins 3, 16, 11, 12), are serial data streams that can be configured by the operator to operate asynchronously at 9600 or 19.2K baud; 8-bit data; 1 start bit; 1 stop bit; and even, odd, or no parity. The serial data stream can also be configured to operate synchronously at the rate of the incoming data stream. Output data is always ASCII encoded except when the BINARY or SYNCHRONOUS modes are selected. The operator-selectable character decoder can be configured to decode 7-bit ASCII, 8-bit ASCII, BAUDOT-US, BAUDOT-ITA2, and EBCDIC characters in which these characters are translated to the equivalent ASCII codes and output at the RS-232 port. When the BINARY mode is selected, the bit stream is sent out as asynchronous 8-bit words framed by the start, stop, and parity bits. When the SYNCHRONOUS mode is selected, the bit stream is sent out as a real time bit stream with no framing. This allows external equipment to perform an alternate character decoding sequence.

D.5 OPERATION

The voice grade channel (VGC) outputs of the WJ-954X demodulators can be selected on a per-channel basis to be further processed by the Flexible Demodulator option. Configuration and control of a flexible demodulator can be performed locally by using the WJ-954X front panel controls and displays or remotely by transmitting remote commands over the IEEE-488 remote interface. **Paragraph D.5.1** provides details on local operations and **paragraph D.5.3** provides details on remote operations for the Flexible Demodulator option. **Paragraph D.5.2** provides details on displaying FAX and VFT data using the WJ-954X/FLX PC Software Programs provided with this option.

Courtesy of http://BlackRadios.terryo.org

D.5.1 LOCAL OPERATIONS

D.5.1.1 Selecting the WJ-954X/FLX Option for Control

Before a flexible demodulator can be configured and controlled, it must first be selected. To select the WJ-954X/FLX option, enter the Main Menu by pressing the front panel MENU key. Highlight the OPTION CONFIGURATION menu item (see **Figure D-9**) and press the CURSOR control knob or the ENTER key to display the Option Configuration Menu.

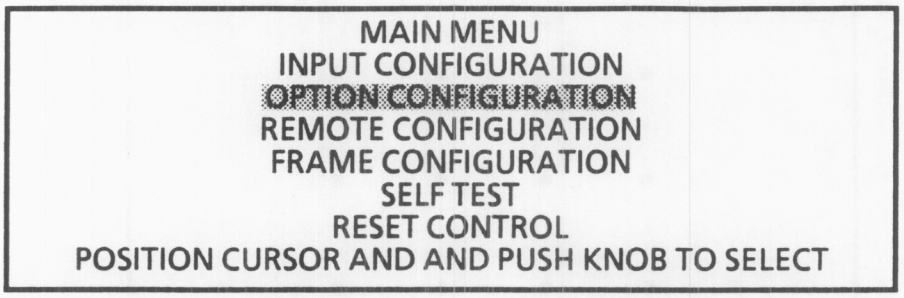

Figure D-9. Main Menu Display

The Option Configuration Menu is displayed showing the Flexible Demodulator option and its option slot location in the WJ-954X (see **Figure D-10**). (Note: there may be more than one Flexible Demodulator Installed in the unit.) Move the cursor to the desired FLEXIBLE DEMODULATOR menu item and push the CURSOR control knob or the ENTER key to select the option and to display the Flexible Demodulator Configuration display.

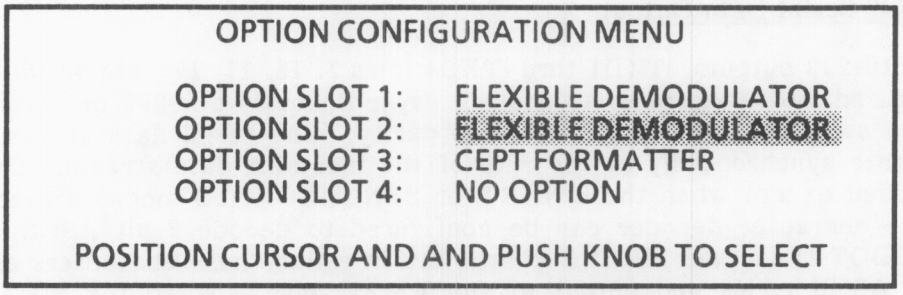

Figure D-10. Option Configuration Menu

D.5.1.2 Configuring the Flexible Demodulator

Selecting the FLEXIBLE DEMODULATOR menu item in the Option Configuration menu causes the Flexible Demodulator Configuration display to be shown. The format of this display is dependent on the demodulator type currently selected.

Figure D-11(A) is an example of the Flexible Demodulator Configuration display when FSK demodulator is selected. This is the default configuration display and is used for the following demodulation types: MODEM(FSK), VFT (FSK), and USER when a customized flexible demodulator is set up for a FSK type of demodulation (see **paragraph D.5.1.4**).

Courtesy of http://BlackRadios.terryo.org

Figure D-11(B) is an example of the Flexible Demodulator Configuration display when the QAM demodulator is selected. This display is used for the following demodulation types: MODEM(QAM), FAX, and USER when a customized flexible demodulator is set up for a QAM type of demodulation.

Figure D-11(C) is an example of the Flexible Demodulator Configuration display when SIGNALLING demodulator is selected.

As shown in **Figure D-11**, the top line of the Flexible Demodulator Configuration display shows the option slot number that the currently selected flexible demodulator is installed in (OPT SLOT: 1), the name of the option (FLEXIBLE DEMODULATOR), and the version of the software loaded in the option (V1.00). These three parameters are displayed in fields that cannot be altered by the operator.

Upon entry into the SIGNALLING Flexible Demodulator Configuration display from the Option Configuration menu, the cursor is placed at the EXIT field. Rotating the CURSOR knob clockwise moves the cursor through the editable fields in the following sequence: EXIT, DEMOD, MODE, TYPE, PROTOCOL, MORE, CUSTOM, EXIT. All other displayed fields are noneditable in this display. Rotating the CURSOR knob counterclockwise reverses the field access sequence.

Upon entry into an FSK or QAM Flexible Demodulator Configuration display from the Option Configuration menu, the cursor is placed at the EXIT field. Rotating the CURSOR knob clockwise moves the cursor through the editable fields in the following sequence: EXIT, DEMOD, MODE, TYPE, PROTOCOL, CHAN, CHAR, PARITY, POL, DISPLAY, MORE, CUSTOM, EXIT. All other displayed fields are noneditable in this display. Rotating the CURSOR knob counterclockwise reverses the field access sequence.

Placing the cursor at the MORE field and pressing the CURSOR knob or ENTER key causes page two of the Flexible Demodulator Configuration display to be shown. Page two of the display is used to configure the RS-232 and analog outputs of the selected flexible demodulator. See **paragraph D.5.1.3** for more details.

Placing the cursor at the CUSTOM field and pressing the CURSOR knob or the ENTER key causes the Custom Demodulator Configuration display to be shown. This display allows the operator to customize the parameters of a flexible demodulator that are not accessible in the standard Flexible Demodulator Configuration displays. See **paragraph D.5.1.4** for more details.

Placing the cursor at the EXIT field and pressing the CURSOR knob or ENTER key causes the Option Configuration menu to be redisplayed.

The following paragraphs provide details on configuring a flexible demodulator by entering parameters in the editable fields.

D.5.1.2.1 Selecting the Flexible Demodulator Voice Grade Channel Input

The Flexible Demodulator option receives its input from any demodulator installed in the WJ-954X Frame. Outputs from demodulators in up to seven other WJ-954X frames can be selected when connected in a "stacked" configuration (see **paragraph 2.2.5** in the base manual for details on the "stacked" configuration).

Courtesy of http://BlackRadios.terryo.org

The DEMOD field in the Flexible Demodulator Configuration display (see **Figure D-11**) is used to select the output of a WJ-954X demodulator to be the input to the flexible demodulator. When the WJ-954X is set up in a "stacked" configuration, the DEMOD field will display one digit, a decimal point, and two digits ("DEMOD: 1.12" in **Figure D-11**). The first digit indicates the frame number in which the demodulator is located (1 thru 8). The two digits after the decimal point indicate the selected demodulator (1 thru 24) in the selected frame. In Demultiplexers with less than 24 channels, the valid numbers are limited to the number of demodulators installed in the unit. If the WJ-954X is set up in a stand-alone configuration, only the demodulator digits will be displayed ("DEMOD: 12).

```
OPT SLOT: 2      FLEXIBLE DEMOD              V1.00
DEMOD: 1.12                  MODE:  MANUAL
TYPE:  MODEM (FSK)     PROTOCOL:  B103
CHAN: FWD      MOD: FSK              BAUD:   300
MARK: 1270      SPACE: 1070           BPS:   300
CHAR: ASCII-8      PARITY:  NONE     POL: NORM
DISPLAY: ON
OPER: MORE, CUSTOM, EXIT
```

(A) Display Format Used for FSK Types of Demodulation

```
OPT SLOT: 2      FLEXIBLE DEMOD              V1.00
DEMOD: 1.12                  MODE:  MANUAL
TYPE:  MODEM (QAM)     PROTOCOL:  V.32
CHAN: FWD      MOD: 32QAM            BAUD: 2400
CARRIER FREQ:  1800 Hz                BPS: 9600
CHAR: ASCII-8      PARITY:  NONE     POL: NORM
DISPLAY: ON
OPER: MORE, CUSTOM, EXIT
```

(B) Display Format Used for QAM Types of Demodulation

```
OPT SLOT: 3      FLEXIBLE DEMOD              V2.02
DEMOD: 01                    MODE:  MANUAL
TYPE:  SIGNALLING
PROTOCOL: Q.23


DISPLAY:  N/A
OPER: MORE, CUSTOM, EXIT
```

(C) Display Format Used for SIGNALLING Demodulation

Figure D-11. Examples of Flexible Demodulator Configuration Displays

Courtesy of http://BlackRadios.terryo.org

To enter a frame or demodulator, move the cursor to the DEMOD field using the CURSOR knob and use the EDIT knob or numeric entry keys.

D.5.1.2.2 Setting the Flexible Demodulator Operating Mode

Three operating modes are available for the Flexible Demodulator option: OFF, TEST, and MANUAL. These modes are described below:

OFF mode: In the OFF mode, the flexible demodulator is disabled. All analog and digital outputs are set to inactive states.

TEST mode: In the TEST mode; the flexible demodulator repeatedly executes its built-in test and reports the results over the RS-232 port. If an RS-232 controller is connected to the RS-232 port, the message "all memory tests passed" is continuously displayed on the controller's screen. Any other message indicates a failure. The CH 1 analog output provides a 1200 Hz sinewave at 6 volts peak-to-peak. The CH 0 analog output provides a sine wave at 6 volts peak-to-peak when the audio reconstruction filter is set to IN (see **paragraph D.5.1.3.2**). (Note: this built-in test is not related to the WJ-954X's built-in test function.)

MANUAL mode: In the MANUAL mode, all features of the flexible demodulator can be controlled via the WJ-954X front panel or via the remote interface. This is the normal operating mode.

D.5.1.2.3 Selecting the Demodulator Type

The TYPE field indicates the current type of demodulation for which the flexible demodulator is set. The available demodulation types are MODEM(FSK), MODEM(QAM), VFT(FSK), VFT(TDM) FAX, SIGNALLING, and USER. When the FSK demodulator is selected (i.e., MODEM(FSK) or VFT(FSK)), the format of the Flexible Demodulator Configuration display is that shown in **Figure D-11(A)**. When the QAM demodulator is selected (i.e., MODEM(QAM)), the format of the Flexible Demodulator Configuration display is that shown in **Figure D-11(B)**. When the SIGNALLING demodulator is selected, the format of the Flexible Demodulator Configuration display is that shown in **Figure D-11(C)**.

To change the demodulator type move the cursor to the field to the right of the TYPE field and use the EDIT knob to display the desired demodulation type. The new demodulator type is selected and the display is automatically updated.

D.5.1.2.4 Selecting the Modulation Protocol

The modulation protocol is dependent on the demodulator type selected (**paragraph D.5.1.2.3**). **Tables D-2** thru **D-7** list the standard protocols available and their associated parameters for the MODEM(FSK), MODEM(QAM), VFT(FSK), VFT(TDM), FAX and SIGNALLING demodulation types, respectively.

Courtesy of http://BlackRadios.terryo.org

The current modulation protocol selected, is displayed in the PROTOCOL field (see **Figure D-11**). To change the modulation protocol, move the cursor to this field and use the EDIT knob to display the desired protocol. The new protocol is automatically selected as the field is changed.

When the modulation protocol is changed, certain parameters in the Flexible Demodulator Configuration display are automatically updated. These parameters are listed in **Tables D-2** thru **D-6** for each protocol. No additional parameters are available in the Flexible Demodulation Configuration display for the SIGNALLING demodulation type and are, therefore, not included in **Table D-7**. Some of the tables include additional parameters that are appropriate to the protocol, but not necessarily displayed on the front panel.

Table D-2 lists the parameters that are automatically updated when the various protocols associated with the MODEM(FSK) demodulation type are selected.

Table D-2. Modem (FSK) Demodulation Protocols and Parameters

PROTOCOL	CHAN	MOD	MARK	SPACE	BAUD	BPS
B103	FWD	FSK	1270	1070	300	300
B103	REV	FSK	2225	2025	300	300
B113	FWD	FSK	1270	1070	300	300
B113	REV	FSK	2225	2025	300	300
B202C	FWD	FSK	1200	2200	1200	1200
V.21	FWD	FSK	980	1180	300	300
V.21	REV	FSK	1650	1850	300	300
V.23	FWD	FSK	1300	2100	1200	1200
V.23	REV	FSK	390	450	75	75
V.23 ALT	FWD	FSK	1300	1700	600	600
V.23 ALT	REV	FSK	390	450	75	75

where:

CHAN = Forward/Reverse Channel. (Forward = Originate)
MOD = Modulation Type
MARK = Mark Frequency in Hz
SPACE = Space Frequency in Hz
BAUD = Baud Rate (Symbols per second)
BPS = Data Rate in Bits per Second (= Baud Rate)

Courtesy of http://BlackRadios.terryo.org

Table D-3 lists the parameters that are automatically updated when the various protocols associated with the MODEM(QAM) demodulation type are selected. For the family of V.27 protocols, there is some additional descrambling used which is not implied in the table. This descrambling is in accordance with the CCITT specification.

Table D-3. Modem (QAM) Demodulation Protocols and Parameters

PROTOCOL	CHAN	MOD (CONST)	FREQ	BAUD	BPS	EQU	DD	CD	DRND
B201B	N/A	QPSK	1800	1200	2400	48	1	0	800000
B208A	N/A	8PSK	1800	1600	4800	48	1	0	800000
B212A	FWD	QPSK	1200	600	1200	24	1	0	800240
B212A	REV	QPSK	2400	600	1200	24	1	0	800240
V.22	FWD	QPSK	1200	600	1200	24	1	0	800240
V.22	REV	QPSK	2400	600	1200	24	1	0	800240
V.22 ALT	FWD	QPSK	1200	600	600	24	0	0	800240
V.22 ALT	REV	QPSK	2400	600	600	24	0	0	800240
V.22bis	FWD	16QAM	1200	600	2400	24	1	0	800240
V.22bis	REV	16QAM	2400	600	2400	24	1	0	800240
V.26A	FWD	QPSK	1800	1200	2400	OFF	2	0	800000
V.26B	FWD	PI/4QPSK	1800	1200	2400	OFF	2	0	800000
V.26bis	FWD	PI/4QPSK	1800	1200	2400	OFF	2	0	800000
B.26bis ALT	FWD	QPSK	1800	1200	1200	OFF	1	0	800000
V.26ter	FWD	QPSK	1800	1200	2400	48	2	0	800000
V.26ter ALT	FWD	QPSK	1800	1200	1200	48	0	0	800000
V.27	FWD	8PSK	1800	1600	4800	48	5	0	830000
V.27bis	FWD	8PSK	1800	1600	4800	48	5	0	830000
V.27bis ALT	FWD	QPSK	1800	1200	2400	48	2	0	830000
V.27ter	FWD	8PSK	1800	1600	4800	48	5	0	830000
V.27ter ALT	FWD	QPSK	1800	1200	2400	48	2	0	830000
V.29	N/A	16QAM(V.29)	1700	2400	9600	96	6	0	800021
V.29 ALT A	N/A	8QAM	1700	2400	7200	96	5	0	800021
V.29 ALT B	N/A	QPSK	1700	2400	4800	96	2	0	800021

NOTE: The following demodulation protocols are only provided in the WJ-954X/FLX option. They are not provided for the WJ-954X/FLX-1.

V.32	FWD	32QAM	1800	2400	9600	96	3	1	800021
V.32	REV	32QAM	1800	2400	9600	96	3	1	840001
V.32 ALT	FWD	16QAM	1800	2400	9600	96	1	0	800021
V.32 ALT	REV	16QAM	1800	2400	9600	96	1	0	840001
V.33	N/A	128QAM	1800	2400	14400	96	3	1	800021
V.33 ALT	N/A	64QAM	1800	2400	12000	96	3	1	800021

where:

CHAN	=	Forward/Reverse Channel (Forward = Originate)
MOD (CONST)	=	Constellation
FREQ	=	Carrier Frequency in Hz
BAUD	=	Baud Rate (Symbols per second)
BPS	=	Data Rate in Bits per Second
EQU	=	Number of Equalizer Taps
DD	=	Differential Decoder Alternative
CD	=	Convolutional Decoder (0 = OFF)
DRND	=	Derandomizer Taps

Courtesy of http://BlackRadios.terryo.org

As shown in **Table D-4**, parameters that are automatically updated in VFT(FSK) demodulation type protocols are channel assignment (CHAN), modulation type (MOD), baud rate (BAUD), mark frequency (MARK), space frequency (SPACE), and data rate in bits per second rate (BPS).

Table D-4. VFT(FSK) Demodulation Protocols and Parameters

PROTOCOL	MOD	CHAN	FIRST FREQ	SPACING	BAUD	DEV	BPS
R.35	FSK	24	420	120	50	30	50
R.35 ALT	FSK	24	420	120	75	30	75
R.35bis	FSK	12	480	240	50	60	50
R.37	FSK	12	480	240	100	60	100
R.37 ALT	FSK	12	480	240	150	60	150
R.38A	FSK	6	600	480	200	120	200
R.38B	FSK	8	540	360	200	90	200
R.39	FSK	20	420	120	50	30	50
R.39 ALT 1	FSK	20	420	120	75	30	75
R.39 ALT 2	FSK	15	425	170	100	40	100

For VFT modulations, demodulator parameters can be computed as follows:

MOD = Modulation Type
CHAN = Number of Channels in the system
MARK = FIRST FREQ + ((CHAN-1) SPACING) - DEV
SPACE = FIRST FREQ + ((CHAN-1) SPACING) + DEV
BAUD = Baud Rate (Symbols per second)
DEV = Frequency Deviation
BPS = Data Rate in Bits Per Second (= Baud Rate)

Table D-5 lists the parameters that are automatically updated when the protocol is changed to VFT(TDM). For the family of V.27 protocols, there is some additional descrambling used which is not implied in the table. This descrambling is in accordance with the CCITT spec.

Courtesy of http://BlackRadios.terryo.org

Table D-5. VFT(TDM) Demodulation Protocols and Parameters

PROTOCOL	CHAN	MOD (CONST)	FREQ	BAUD	BPS*	EQU	DD	CD	DRND
V.26A - R.101A	N/A	QPSK	1800	1200	2400	48	2	0	800000
V.26A - R.101B	N/A	QPSK	1800	1200	2400	48	2	0	800000
V.26B - R.101A	N/A	PI/4QPSK	1800	1200	2400	48	4	0	800000
V.26B - R.101B	N/A	PI/4QPSK	1800	1200	2400	48	4	0	800000
V.26bis - R.101A	N/A	PI/4QPSK	1800	1200	2400	48	4	0	800000
V.26bis - R.101B	N/A	PI/4QPSK	1800	1200	2400	48	4	0	800000
V.26ter - R.101A	N/A	QPSK	1800	1200	2400	48	2	0	800000
V.26ter - R.101B	N/A	QPSK	1800	1200	2400	48	2	0	800000
V.27bisALT - R.101A	N/A	QPSK	1800	1200	2400	48	2	0	830000
V.27bisALT - R.101B	N/A	QPSK	1800	1200	2400	48	2	0	830000
V.27terALT - R.101A	N/A	QPSK	1800	1200	2400	48	2	0	830000
V.27terALT - R.101B	N/A	QPSK	1800	1200	2400	48	2	0	830000
V.29 - R.101A	N/A	16QAM(V.29)	1700	2400	9600	96	6	0	800021
V.29 - R.101B	N/A	16QAM(V.29)	1700	2400	9600	96	6	0	800021
V.29ALTA - R.101A	N/A	8QAM	1700	2400	7200	96	5	0	800021
V.29ALTA - R.101B	N/A	8QAM	1700	2400	7200	96	5	0	800021
V.29ALTB - R.101A	N/A	QPSK	1700	2400	4800	96	2	0	800021
V.29ALTB - R.101B	N/A	QPSK	1700	2400	4800	96	2	0	800021

where:

CHAN	=	Forward/Reverse Channel (Forward = Originate)
MOD (CONST)	=	Constellation
FREQ	=	Carrier Frequency in Hz
BAUD	=	Baud Rate (Symbols per second)
BPS	=	Data Rate in Bits per Second
EQU	=	Number of Equalizer Taps
DD	=	Differential Decoder Alternative
CD	=	Convolutional Decoder (0 = OFF)
DRND	=	Derandomizer Taps

***Note:** When the bps is greater than 2400, a sub-channel (selectable from the front panel) is demultiplexed from the data stream. The sub-channel has a data rate of 2400 bps.

When in the VFT(TDM) demodulation type, the user must specify the baud rate and channel number of the desired TDM channel. See **Table J** under **Table D-7** in **section D.5.3.1** for details. There is also information about demultiplexing higher bps data streams (e.g., in a 9600 bps V.29 signal, one of four possible 2400 bps subchannels A, B, C, or D can be applied to the R.101 de-commutator).

Courtesy of http://BlackRadios.terryo.org

Table D-6 lists the parameters that are automatically updated when the protocol is changed to the FAX demodulation type.

Table D-6. FAX Demodulation Protocols and Parameters

PROTOCOL	CHAN	MOD (CONST)	FREQ	BAUD	BPS	EQU	DD	CD	DRND
GROUP 3 (AUTO)	------	See Note Below	-------						
GROUP 3 (9600)	N/A	16QAM(V.29)	1700	2400	9600	24	6	0	800021
GROUP 3 (7200)	N/A	8QAM	1700	2400	7200	24	5	0	800021
GROUP 3 (4800)	N/A	8PSK	1800	1600	4800	24	5	0	830000
GROUP 3 (2400)	N/A	QPSK	1800	1200	2400	12	2	0	830000

where:

CHAN = Forward/Reverse Channel (Forward = Originate)
MOD (CONST) = Constellation (see **Figure D-15**)
FREQ = Carrier Frequency in Hz
BAUD = Baud Rate (Symbols per second)
BPS = Data Rate in Bits per Second
EQU = Number of Equalizer Taps
DD = Differential Decoder Alternative
CD = Convolutional Decoder (0 = OFF)
DRND = Derandomizer Taps

Note: In Group 3 (AUTO) one of the other four sets of parameters will automatically be used based upon what is detected by the decoding of T.30 data. This is the FAX fall back mode.

Table D-7 lists the ASCII-7 output generated and routed to the RS-232 output port when the protocols associated with the SIGNALLING demodulation type are selected. When a signal is detected within the Q.23/Q.35 protocol, an ASCII-7 data stream consisting of the signal type, a timestamp, and the signal status is genrated. For example, the detection of a ringing tone at system time 69.575 seconds for a duration of 0.904 seconds produces the data below:

RINGING 00069.575 ON RINGING 00070.479 OFF

Courtesy of http://BlackRadios.terryo.org

Table D-7. SIGNALLING Demodulation Protocols and ASCII Output

PROTOCOL	SIGNAL	ASCII OUTPUT
Q.23 (DTMF)	'1'	1 ttttt.ttt ON 1 ttttt.ttt OFF
	'2'	2 ttttt.ttt ON 2 ttttt.ttt OFF
	'3'	3 ttttt.ttt ON 3 ttttt.ttt OFF
	'4'	4 ttttt.ttt ON 4 ttttt.ttt OFF
	'5'	5 ttttt.ttt ON 5 ttttt.ttt OFF
	'6'	6 ttttt.ttt ON 6 ttttt.ttt OFF
	'7'	7 ttttt.ttt ON 7 ttttt.ttt OFF
	'8'	8 ttttt.ttt ON 8 ttttt.ttt OFF
	'9'	9 ttttt.ttt ON 9 ttttt.ttt OFF
	'0'	0 ttttt.ttt ON 0 ttttt.ttt OFF
	'*'	* ttttt.ttt ON * ttttt.ttt OFF
	'#'	# ttttt.ttt ON # ttttt.ttt OFF
	'A'	A ttttt.ttt ON A ttttt.ttt OFF
	'B'	B ttttt.ttt ON B ttttt.ttt OFF
	'C'	C ttttt.ttt ON C ttttt.ttt OFF
	'D'	D ttttt.ttt ON D ttttt.ttt OFF
Q.35	Dial tone	DIAL TONE ttttt.ttt ON DIAL TONE ttttt.ttt OFF
	Ringing Tone	RINGING ttttt.ttt ON RINGING ttttt.ttt OFF
	Busy/Congestion Tone	BUSY ttttt.ttt ON BUSY ttttt.ttt OFF
	Recording Call Warning	RECD WARN ttttt.ttt ON RECD WARN ttttt.ttt OFF
	Special Information	SPCL INFO ttttt.ttt ON SPCL INFO ttttt.ttt OFF
	Payphone Recognition	PAYPHONE ttttt.ttt ON PAYPHONE ttttt.ttt OFF
	Call Waiting Tone	CALL WAIT ttttt.ttt ON CALL WAIT ttttt.ttt OFF
	Caller Waiting Tone	CLLR WAIT ttttt.ttt ON CLLR WAIT ttttt.ttt OFF

where:

ttttt.ttt = System time in Seconds (Resets to 00000.000 when the SIGNALLING Demodulation Type is selected)

D.5.1.2.5 **Selecting the Received Character Decoding Format**

The character decoding format is displayed in the CHAR field (see **Figure D-11**). One of seven character decoding formats may be selected.

In the ASCII-8, ASCII-7, BAUDOT-US, BAUDOT-ITA2, or EBCDIC format modes, the flexible demodulator's internal character decoder will interpret the received bit stream based on the selected decoder format and route the data to the RS-232 output port as ASCII data.

In the BINARY format mode, no conversion takes place and the received bit stream is routed to the RS-232 output port as 8-bit asynchronous data words, framed by the appropriate start, stop, and parity bits (**paragraph D.5.1.3.1**). In the SYNCHRONOUS format mode, no conversion takes place and the received bit stream is routed to the RS-232 output port as a real time bit stream with no framing.

Courtesy of http://BlackRadios.terryo.org

To change the character decoding format, move the cursor to the CHAR: field and use the EDIT knob until the desired format is displayed. The new format is automatically selected as the field is changed.

The character decoding format is not selectable for the SIGNALLING demodulation type. Data is automatically formatted as ASCII-7 and routed to the RS-232 output port with bit 8 forced to zero (uneditable).

D.5.1.2.6 Selecting the Received Character Parity

The parity for the character decoding format is displayed in the PARITY: field (see **Figure D-11**). Parity selection is dependent on the character decoding format. For ASCII-8 and ASCII-7 character decoding formats, parity can be set to NONE, EVEN, or ODD. Parity does not apply to other character decoding formats and N/A will be displayed in the PARITY field.

To change the parity for ASCII-7 or ASCII-8 character decoding formats, move the cursor to the PARITY field and use the EDIT knob until the desired selection is displayed. Parity is automatically updated as the field is changed.

D.5.1.2.7 Selecting the Received Bit Polarity

The received bit polarity is displayed in the POL field. Entries can be either NORM (normal) or INV (inverted).

Selecting normal polarity causes the received bit stream to be sent to the flexible demodulator's character decoder without alteration. Selecting inverted polarity causes a logical inversion of the bit stream before it is sent to the character decoder. For example:

```
Received Bit Stream:    ...  1011000101110  .....
     Normal Polarity:   ...  1011000101110  .....
   Inverted Polarity:   ...  0100111010001  .....
```

The availability of the polarity selection is particularly useful when monitoring FSK signals and the sense of the mark/space tones is not previously known. For example if the text displayed on the external equipment is scrambled, changing the polarity may make it more readable.

To change the received bit polarity, move the cursor to the POL field and use the EDIT knob until the desired selection is displayed. The received bit polarity is automatically updated as the field is changed.

D.5.1.2.8 Selecting the Analog Outputs

The DISPLAY field in the Flexible Demodulator Configuration display controls the state of the analog outputs. Either of two display states may be selected: ON or OFF. When ON is selected, the analog outputs are available on pins 9 and 10 of the rear panel FLEX connector. These outputs can be connected to a two-channel oscilloscope for eye diagram and constellation display generation. When OFF is selected, the analog outputs are disabled.

Courtesy of http://BlackRadios.terryo.org

When ON is selected, the types of signals provided on the analog outputs are dependent on the demodulator type selected (see **paragraph D.5.1.2.3**). For MODEM(FSK) and VFT(FSK) demodulation types, the analog outputs provide signals for eye diagram generation. For MODEM(QAM), VFT(TDM), and FAX demodulation types, the analog outputs provide signals for constellation display generation. When multiple flexible demodulators are installed, the analog outputs at the rear panel are provided by the currently selected flexible demodulator only.

To change the display mode, move the cursor to the DISPLAY field and use the EDIT knob until the desired mode is displayed. The display mode is automatically updated as the field is changed.

When the SIGNALLING demodulation type is selected, no analog outputs are generated. Therefore, the display mode is not selectable for the SIGNALLING demodulation type.

D.5.1.3 Configuring the RS-232 and Analog Outputs

Page two of the Flexible Demodulator Configuration display allows the operator to configure certain parameters of the RS-232 and analog outputs. Page two is accessed by placing the cursor at the MORE field in page one of the Flexible Demodulator Configuration display (see **Figure D-11**) and pressing the CURSOR knob or the ENTER key. **Figure D-12** is an example of page two of the Flexible Demodulator Configuration display.

```
OPT SLOT: 2        FLEXIBLE DEMOD                V1.00
- - - - - - -     RS-232 Serial Output     - - - - - - -
BAUD:  9.6K,         8 BITS,      PARITY:  EVEN
BIT 8:  0
- - - - - - - -     Analog Outputs     - - - - - - - -
RECONST FILTER:  IN          LIMITER:  OUT

OPER:  EXIT
```

(A) Display Format Used for BINARY, ASCII, BAUDOT, and EBCDIC Character Decoding Formats

```
OPT SLOT: 2        FLEXIBLE DEMOD                V1.00
- - - - - - -     RS-232 Serial Output     - - - - - - -
                   SYNCHRONOUS

- - - - - - - -     Analog Outputs     - - - - - - - -
RECONST FILTER:  IN          LIMITER:  OUT

OPER:  EXIT
```

(B) Display Format Used for SYNCHRONOUS Character Decoding Format

Figure D-12. Page Two of the Flexible Demodulator Configuration Display

Courtesy of http://BlackRadios.terryo.org

The top line of the display shows the option slot of the current selected flexible demodulator (OPT SLOT: 2), the name of the option (FLEXIBLE DEMODULATOR), and the version of software loaded in the option (V1.00). The remainder of the display is divided into two sections. The top section contains RS-232 output parameters while the bottom section contains analog output parameters. Refer to **paragraph D.5.1.3.1** for details on configuring RS-232 output parameters and to **paragraph D.5.1.3.2** for details on configuring analog output parameters.

To return to page one of the Flexible Demodulator Configuration display, move the cursor to the EXIT field and press the CURSOR knob or the ENTER key.

D.5.1.3.1 Configuring RS-232 Output Parameters

The editable RS-232 parameters contained on the top section of page two of the Flexible Demodulator Configuration display are baud rate (BAUD), parity (PARITY), and the status of bit 8 if seven-bit ASCII data is transmitted (see **Figure D-12(A)**). ASCII data is always transmitted except when the character decoder is set to BINARY or SYNCHRONOUS. The 8 BITS field, which cannot be changed, indicates the number of output bits. (Note: it is important to remember the difference between the received bit stream being demodulated from the incoming signal and the transmitted bit stream sent to external equipment. The parameters described above control the characteristics of the transmitted bit stream.)

The baud rate can be either 9.6K or 19.2K. Parity can be NONE, ODD, or EVEN, and the status of bit 8 can be either 0 or 1. To change one of the RS-232 output parameters, move the cursor to the appropriate field and use the EDIT knob until the desired value is displayed. The RS-232 output parameters are automatically updated as the fields are changed.

When the SIGNALLING demodulation type is selected, the format of the output data is automatically selected as ASCII-7 with bit 8 forced zero. Therefore, only the BAUD and PARITY output parameters are editable for the SIGNALLING demodulation type.

When the SYNCHRONOUS character format is selected, real time bit streams are transmitted with no framing. Therefore, no RS-232 output parameters are editable for the SYNCHRONOUS character format (see **Figure D-12(B)**).

D.5.1.3.2 Configuring Analog Output Parameters

The bottom section of page two of the Flexible Demodulator Configuration display shows the status of the analog reconstruction filter and the analog limiter (see **Figure D-12**). Both the RECONST FILTER (analog reconstruction filter) and LIMITER (analog limiter) fields are editable for all demodulation types except SIGNALLING, where N/A is displayed in both fields.

The analog reconstruction filter can be set to either IN or OUT. When set to IN, the analog data output is filtered to remove image frequencies that result from the reconstruction process. This provides for a more suitable output for eye diagram generation. Therefore, when viewing eye diagrams the analog reconstruction filter should be set to IN.

Courtesy of http://BlackRadios.terryo.org

Conversely, when constellation diagrams are displayed, the analog reconstruction filter should be set to OUT because the filtering process will distort the constellation. (Note: the state of the reconstruction filter is automatically set to the state most appropriate to the display type.)

The analog limiter can be set to IN or OUT. When IN is selected, the video from the FM discriminator is rectified and conditioned to RS-232 voltage levels. This signal is then routed directly to the RS-232 port on the rear panel FLEX connector, bypassing the character decoder. It should be noted, however, that when the limiter is set to IN, the character decoding parameters and the RS-232 output parameters are meaningless. Therefore the external equipment should be configured to communicate at the baud rate of the incoming data signal.

To select the limiter, move the cursor to the LIMITER field and use the EDIT knob to display IN. The limiter is automatically selected when the field is changed. When SYNCHRONOUS character decoding is used with MODEM (FSK), VFT (FSK), or custom OOK demodulation types, the limiter is automatically set to IN and becomes uneditable.

D.5.1.4 Custom Demodulator Configuration

User-defined, custom demodulators can be set up within certain restrictions to meet the requirements of non-standard MODEM protocols. Up to five custom demodulator setups can be entered and saved in memory. The Custom Demodulator Configuration display is used to enter the parameters. This display is accessed by moving the cursor to the CUSTOM field in the Flexible Demodulator Configuration display (see **Figure D-10**) and pressing the CURSOR knob or the ENTER key. Three formats are used for this display, depending on the demodulator type: FSK, QAM, and OOK.

Figure D-13 is an example of a Custom Demodulator Configuration display for FSK type demodulators.

As shown in **Figure D-13**, the top line of the Custom Demodulator Configuration display shows the option slot number that the currently selected flexible demodulator is installed in (OPT SLOT: 2), the name of the option (FLEXIBLE DEMODULATOR), and the version of the software loaded in the option (V1.00). These three parameters are displayed in fields that cannot be altered by the operator.

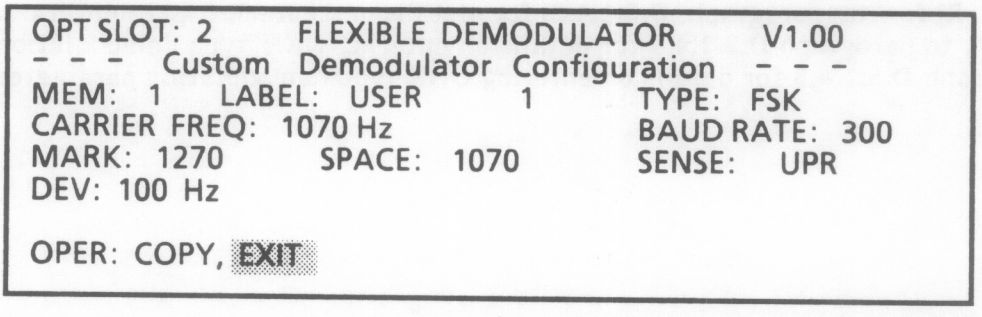

Figure D-13. Example of the Custom Demodulator Configuration Display (FSK Type)

Courtesy of http://BlackRadios.terryo.org

Upon entry into the Custom Demodulator Configuration display, the cursor is placed at the EXIT field. Pressing the CURSOR knob or the ENTER key causes the Option Configuration menu to be redisplayed.

The following paragraphs provide more details on entering arbitrary parameters for a custom demodulator.

D.5.1.4.1 Assigning an Identifier to the Custom Demodulator Setup

The MEM and LABEL fields in the Custom Demodulator Configuration display are used to assign identifiers to the custom demodulator setup.

The MEM field is used to select the storage location for the setup parameters. The data in this field can be any number from 1 to 5. When the MEM number is entered, all fields in the display are automatically updated with the parameters assigned to that memory location. When entering the memory location, the parameters should be reviewed to determine if the data should be retained. Entering new data in the display causes the previous data to be overwritten.

The LABEL field allows the operator to assign an alphabetic label to the Custom Demodulator setup. This enables the operator to easily identify the Custom Demodulator when selecting the PROTOCOL field in the Flexible Demodulator Configuration display (see **paragraph D.5.1.2**).

The EDIT knob is used to enter the label characters. Each character is entered separately at the location of the cursor. Rotating the EDIT knob scrolls through the alphabet, numbers 0 thru 9, and a space character.

D.5.1.4.2 Entering the Demodulation Type

The TYPE field in the Custom Demodulator Configuration display is used to enter the demodulator type for the custom setup (see **Figure D-13**). The type can be FSK, QAM, or OOK. To change the demodulator type, move the cursor to the TYPE field and use the EDIT knob until the desired type is displayed.

Refer to **paragraph D.5.1.4.3** for details on entering parameters for FSK type demodulation, to **paragraph D.5.1.4.4** for details on entering QAM type demodulation parameters, and to paragraph **D.5.1.4.5** for details on entering OOK type demodulation parameters.

Courtesy of http://BlackRadios.terryo.org

D.5.1.4.3 Entering Custom FSK Demodulator Parameters

The following paragraphs provide details on entering parameters for a custom FSK demodulator.

D.5.1.4.3.1 *Entering the Carrier Frequency*

The CARRIER FREQ field in the Custom Demodulator Configuration display (**Figure D-12**) is used to enter the center frequency of the FSK demodulator. The entry, in Hz, can be any value from 200 Hz to 3800 Hz in 5 Hz steps. To change the frequency, move the cursor to the CARRIER FREQ field and use the EDIT knob or numeric keys. When entered via the numeric keypad, the entry is rounded to the nearest 5 Hz.

D.5.1.4.3.2 *Entering the Baud Rate*

The BAUD RATE field in the Custom Demodulator Configuration display (**Figure D-13**) is used to enter the baud rate of the incoming data. The baud rate can be any value from 1 to 1200 Hz in 1 Hz steps. To change the baud rate, move the cursor to the BAUD RATE field and use the EDIT knob or numeric entry keys.

D.5.1.4.3.3 *Entering the Mark Frequency Sense*

The SENSE field in the Custom Demodulator Configuration display (**Figure D-13**) is used to enter the mark frequency sense as either upper (UPR) or lower (LWR).

The sense parameter (SENSE), carrier frequency parameter (CARRIER FREQ), and FM deviation parameter (DEV) entries determine the space and mark frequencies. The MARK and SPACE fields are noneditable and will contain values as determined by the following formulas:

Mark Freq. in Hz (MARK) = CARRIER FREQ + DEV x SENSE

Space Freq. in Hz (SPACE) = CARRIER FREQ - DEV x SENSE

(where SENSE = 1 for UPR or -1 for LWR)

To change the mark frequency sense, move the cursor to the SENSE field and use the EDIT knob to select UPR or LWR, as desired.

D.5.1.4.3.4 *Entering the FM Deviation*

The DEV field in the Custom Demodulator Configuration display (**Figure D-13**) is used to enter the FM deviation around the carrier frequency. The deviation, can be any value from 10 Hz to 1200 Hz in 5 Hz steps. To change the FM deviation, move the cursor to the DEV field and use the EDIT knob or the numeric entry keys. When entered via the numeric keypad, the entry is rounded to the nearest 5 Hz.

Courtesy of http://BlackRadios.terryo.org

D.5.1.4.3.5 ***Copying Parameters from a Standard FSK Demodulator***

The operator has the capability to copy the characteristic parameters from a standard FSK demodulator while in the FSK formatted Custom Demodulator Configuration display. This may be useful for creating demodulators with nonstandard protocols that have similar characteristics to standard protocols.

To copy parameters, move the cursor to the COPY field on the bottom line of the display. Pressing the CURSOR knob or the ENTER key causes the bottom line of the display to read "COPY FROM FSK DEMOD: XXXX", where XXXX is one of the standard FSK demodulator parameters. The EDIT knob is used to scroll through the FSK protocols listed in **Table D-2.**

When the desired protocol is displayed, pressing the CURSOR knob or ENTER key causes the protocol to be selected. All applicable fields in the Custom Demodulator Configuration display are automatically updated with values associated with the selected protocol. These values can be further edited if desired.

D.5.1.4.4 **Entering Custom QAM Demodulator Parameters**

Selecting QAM in the TYPE field in the Custom Demodulator Configuration display causes the display to be formatted as that shown in **Figure D-14.** The following paragraphs provide details on entering parameters in this display.

```
OPT SLOT: 2      FLEXIBLE DEMODULATOR      V1.00
- - -  Custom Demodulator Configuration  - - -
TAG: 1    LABEL: USER      1      TYPE: QAM
CARRIER FREQ: 1200 Hz          BAUD RATE:  600
CONST: 16QAM (V.29)          EQUALIZER TAPS:  48
DIF DCDR: ALT 1               CNV DCDR: OFF
DRND: 1000 0100 0000 0000 0000 0001
OPER: COPY, EXIT
```

Figure D-14. Example of the Custom Demodulator Configuration Display (QAM Type)

D.5.1.4.4.1 ***Entering the Carrier Frequency***

The CARRIER FREQ field in the Custom Demodulator Configuration display **(Figure D-14)** is used to enter the carrier frequency. The carrier frequency can be any value from 200 Hz to 3800 Hz in 10 Hz steps. To change the frequency, move the cursor to the CARRIER FREQ and use the EDIT knob or numeric entry keys.

D.5.1.4.4.2 ***Entering the Baud Rate***

The BAUD RATE field in the Custom Demodulator Configuration display **(Figure D-14)** is used to enter the baud rate of the incoming data. Using the EDIT knob scrolls through the following available baud rates: 300, 600, 1200, 1600, or 2400 bps.

Courtesy of http://BlackRadios.terryo.org

D.5.1.4.4.3 ***Entering the Signal Space Constellation***

The CONST field in the Custom Demodulator Configuration display (see **Figure D-14**) is used to select the signal space constellation that is used during the demodulation process. Eight predefined constellations are available: QPSK, 8PSK, 8QAM, 16QAM, 16QAM(V.29), 32QAM, 64QAM, and 128QAM. These constellations are illustrated in **Figure D-15.** The symbol-to-bit mappings of each constellation are fixed as displayed and cannot be changed.

To change the signal space constellation, move the cursor to the CONST field and use the EDIT knob to select the desired constellation. The new constellation is automatically selected as the field is changed.

D.5.1.4.4.4 ***Entering the Number of Equalizer Taps***

The EQUALIZER TAPS field in the Custom Demodulator Configuration display (**Figure D-14**) is used to select the number of taps in the variable length adapter equalizer. Equalizer lengths of 24, 48, or 96 taps can be selected. To select the equalizer length, move the cursor to the EQUALIZER TAPS field and use the edit knob until the desired number is displayed. The length is automatically updated as the field is changed. The equalizer can also be turned OFF. In general, setting the equalizer to OFF will quicken signal acquisition but degrade the quality of the signal space constellation. The equalizer should be activated for higher order QAMs.

D.5.1.4.4.5 ***Entering the Differential Decoder Alternative***

To eliminate the requirement for absolute carrier phase recovery in QAM systems, a technique known as differential phase decoding is used. Using this method, the phase of each symbol is transmitted relative to the phase of the preceding symbol. There are seven differential encoding alternatives available with the Flexible Demodulator option; Alternative 0 (ALT 0) thru Alternative 6 (ALT 6).

Each differential encoder alternative has two characteristics: the number of input bits and the number of output bits. The length of the table is dependent on the number of input bits. To interpret the tables, consider them as look-up tables with the index as the previous and current symbol bits and the element as the differentially encoded outputs. For example, Alternative 1 has two input bits so the input index is derived as the concatentation of the previous two bits and the current two bits as shown below.

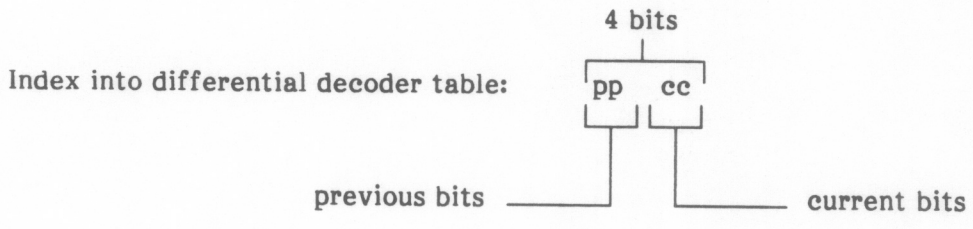

Figure D-16 shows the number of input and output bits for each Alternative and their corresponding tables. To change the Alternative, move the cursor to the DIF DCDR field and use the EDIT knob to display ALT 0, ALT 1, ALT 2, ALT 3, ALT 4, ALT 5, or ALT 6 as desired.

Courtesy of http://BlackRadios.terryo.org

THIS PAGE INTENTIONALLY LEFT BLANK

Courtesy of http://BlackRadios.terryo.org

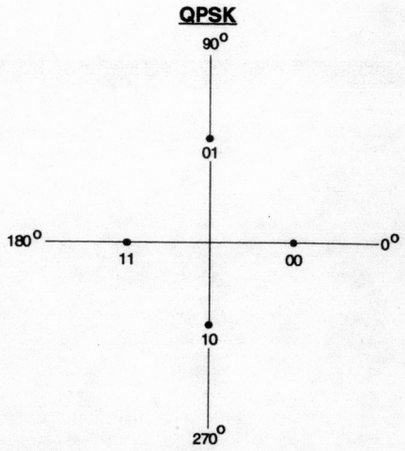

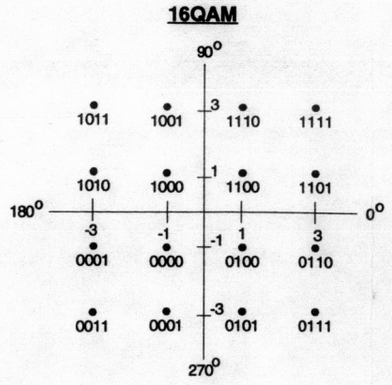

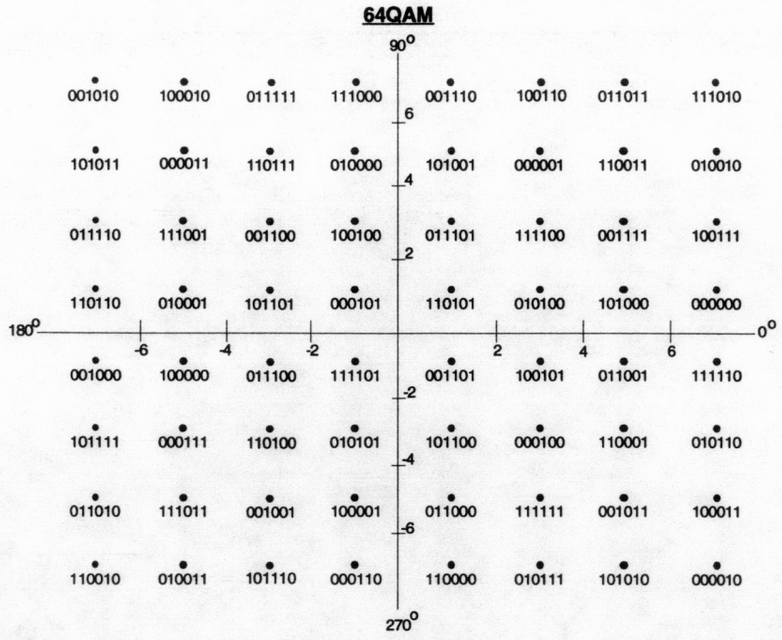

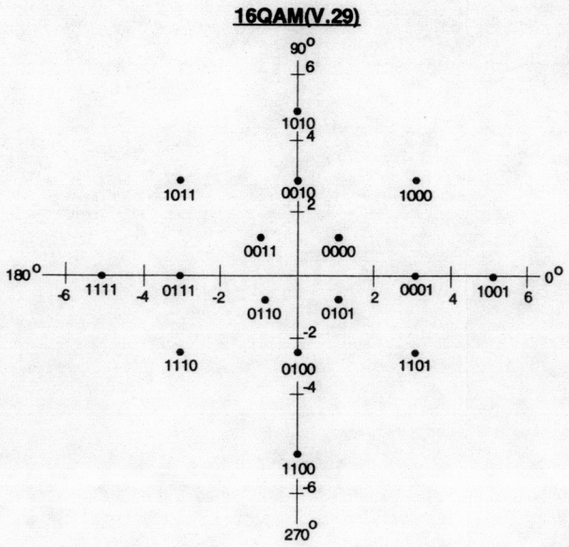

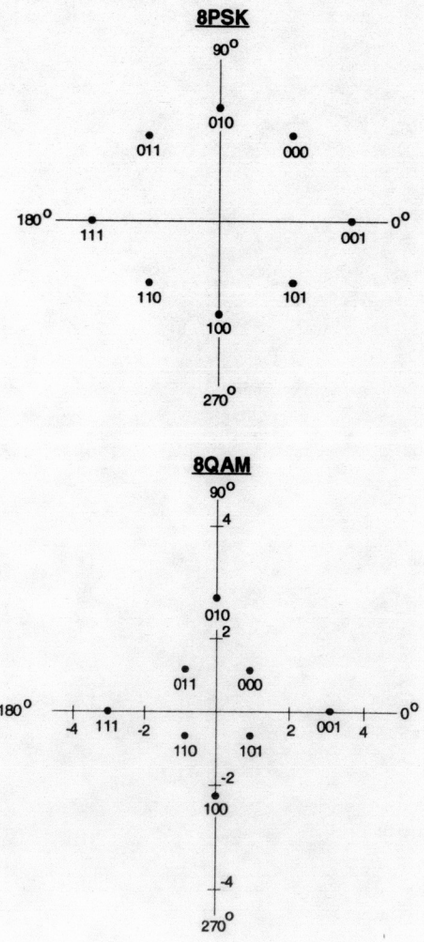

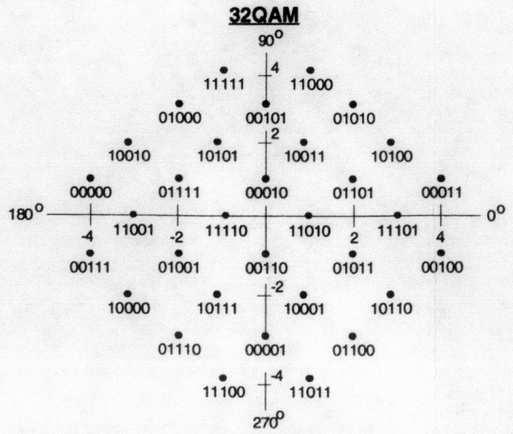

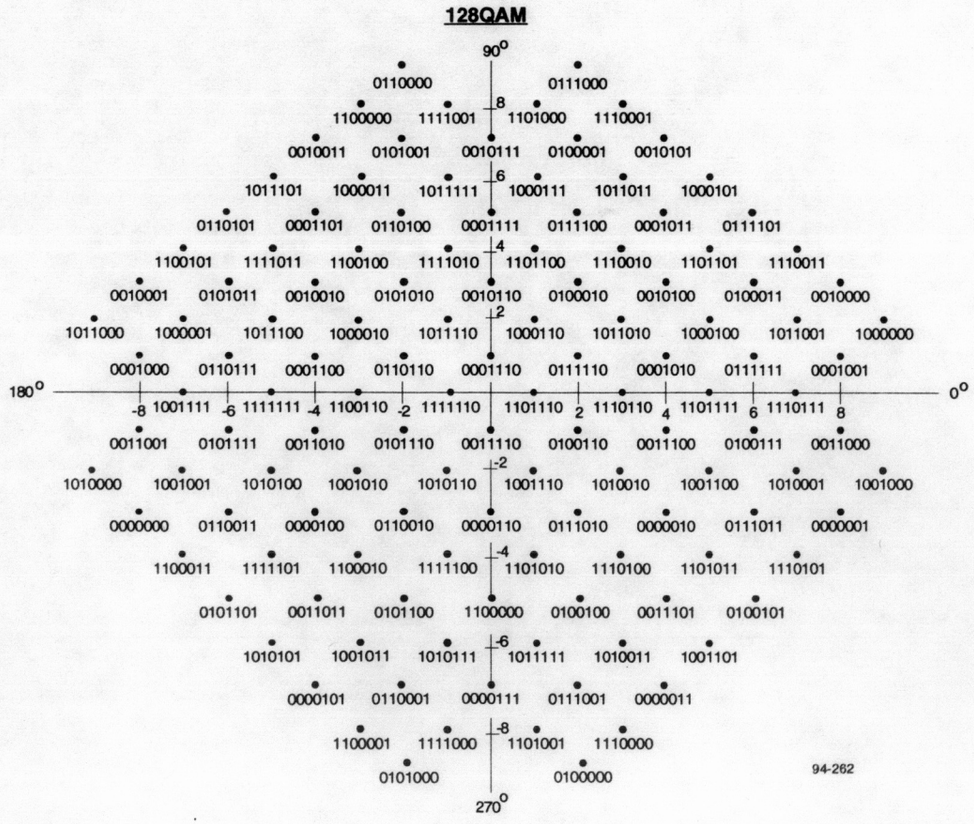

Figure D-15. Predefined Constellations

Courtesy of http://BlackRadios.terryo.org

ALTERNATIVE 0

Input Bits: 2 Output Bits: 1

Table: 0, 0, 1, 1, 1, 1, 0, 0, 0, 0, 1, 1, 1, 1, 0, 0

ALTERNATIVE 1

Input Bits: 2 Output Bits: 2

Table: 01, 00, 11, 10, 01, 10, 00, 00, 10, 01, 11, 10, 11, 00, 01

ALTERNATIVE 2

Input Bits: 2 Output Bits: 2

Table: 00, 01, 10, 11, 10, 00, 11, 01, 01, 11, 00, 10, 11, 10, 01, 00

ALTERNATIVE 3

Input Bits: 2 Output Bits: 2

Table: 00, 01, 10, 11, 01, 00, 11, 10, 11, 10, 00, 01, 10, 11, 01, 00

ALTERNATIVE 4

Input Bits: 3 Output Bits: 2

Table: 00, 10, 00, 00, 11, 00, 00, 01, 00, 00, 00, 01, 00, 10, 11, 00,
10, 00, 00, 00, 00, 11, 01, 00, 00, 11, 10, 00, 01, 00, 00, 00,
01, 00, 00, 11, 00, 00, 10, 00, 00, 00, 01, 00, 10, 00, 00, 11,
00, 01, 11, 00, 00, 00, 00, 10, 11, 00, 00, 10, 00, 01, 00, 00

ALTERNATIVE 5

Input Bits: 3 Output Bits: 3

Table: 001, 101, 000, 010, 110, 100, 111, 011, 000, 001, 010, 011, 100, 101, 110, 111,
101, 100, 001, 000, 111, 110, 011, 010, 100, 110, 101, 001, 011, 111, 010, 000,
011, 010, 111, 110, 001, 000, 101, 100, 010, 000, 011, 111, 101, 001, 100, 110,
111, 011, 110, 100, 000, 010, 001, 101, 110, 111, 100, 101, 010, 011, 000, 001

ALTERNATIVE 6

Input Bits: 4 Output Bits: 4

Table: 0001, 0101, 0000, 0010, 0110, 0100, 0111, 0011, 1001, 1101, 1000, 1010, 1110, 1100, 1111, 1011,
0000, 0001, 0010, 0011, 0100, 0101, 0110, 0111, 1000, 1001, 1010, 1011, 1100, 1101, 1110, 1111,
0101, 0100, 0001, 0000, 0111, 0110, 0011, 0010, 1101, 1100, 1001, 1000, 1111, 1110, 1011, 1010,
0100, 0110, 0101, 0001, 0011, 0111, 0010, 0000, 1100, 1110, 1101, 1001, 1011, 1111, 1010, 1000,
0011, 0010, 0111, 0110, 0001, 0000, 0101, 0100, 1011, 1010, 1111, 1110, 1001, 1000, 1101, 1100,
0111, 0011, 0110, 0100, 0000, 0010, 0001, 0101, 1111, 1011, 1110, 1100, 1000, 1010, 1001, 1101,
0110, 0111, 0100, 0101, 0010, 0011, 0000, 0001, 1110, 1111, 1100, 1101, 1010, 1011, 1000, 1001,
0001, 0101, 0000, 0010, 0110, 0100, 0111, 0011, 1001, 1101, 1000, 1010, 1110, 1100, 1111, 1011,
0000, 0001, 0010, 0011, 0100, 0101, 0110, 0111, 1000, 1001, 1010, 1011, 1100, 1101, 1110, 1111,
0101, 0100, 0001, 0000, 0111, 0110, 0011, 0010, 1101, 1100, 1001, 1000, 1111, 1110, 1011, 1010,
0100, 0110, 0101, 0001, 0011, 0111, 0010, 0000, 1100, 1110, 1101, 1001, 1011, 1111, 1010, 1000,
0011, 0010, 0111, 0110, 0001, 0000, 0101, 0100, 1011, 1010, 1111, 1110, 1001, 1000, 1101, 1100,
0010, 0000, 0011, 0111, 0101, 0001, 0100, 0110, 1010, 1000, 1011, 1111, 1101, 1001, 1100, 1110,
0111, 0011, 0110, 0100, 0000, 0010, 0001, 0101, 1111, 1011, 1110, 1100, 1000, 1010, 1001, 1101,
0110, 0111, 0100, 0101, 0010, 0011, 0000, 0001, 1110, 1111, 1100, 1101, 1010, 1001, 1000, 1001

94-261

Figure D-16. Differential Decoder Alternatives

Courtesy of http://BlackRadios.terryo.org

D.5.1.4.4.6 ***Enabling or Disabling the Convolutional Decoder***

CCITT Recommendations for V.32 and V.33 protocols include a convolutional decoder to enhance error performance. **Figure D-17** is a block diagram of the convolutional decoder.

The CNV DCDR field in the Custom Demodulator Configuration display (**Figure D-14**) is used for enabling or disabling the decoder. To enable the decoder, move the cursor to the CNV DCDR field and use the EDIT knob to display ON. To disable the decoder, use the EDIT knob to display OFF.

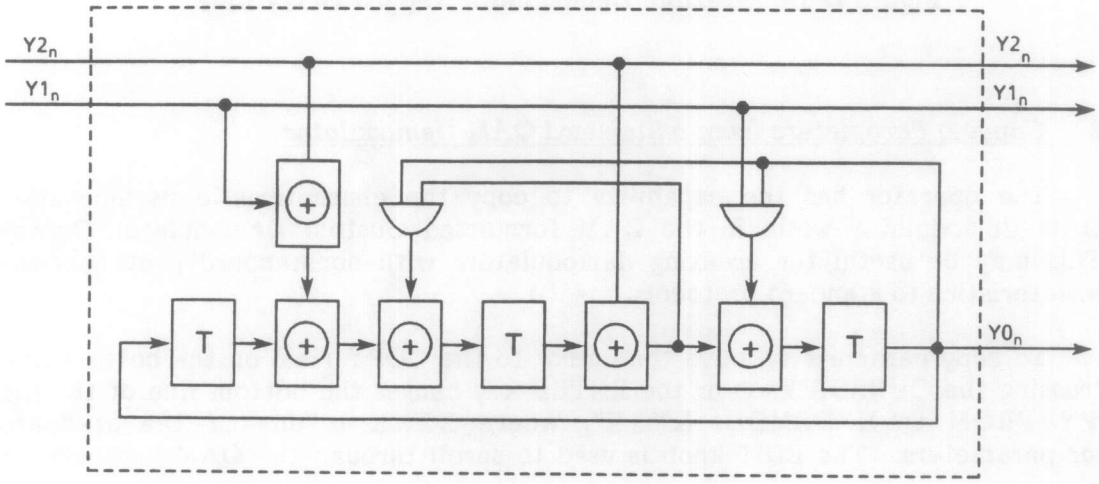

Figure D-17. Convolutional Decoder Block Diagram

D.5.1.4.4.7 ***Entering Derandomizer Taps***

To eliminate data dependencies in the symbol timing recovery circuit, a data randomizer/derandomizer pair is typically included in QAM systems. The derandomizer portion is implemented in the Flexible Demodulator option as a tapped delay line (see **Figure D-18**). Each of the 24 taps (T0 thru T23) are independently controllable to provide the capability for an arbitrary derandomizer configuration.

To connect a delay tap to the output data stream, set the corresponding bit in the DRND: field in the Custom Demodulator Configuration display (**Figure D-14**) to a 1. As shown in **Figure D-14**, the DRND field contains 24 bits, divided into six groups of four bits each. Reading the bits in the field from left to right represents taps T0 thru T23 respectively. The bits are edited in groups of four by moving the cursor to the desired group, then using the 0 and 1 numeric entry keys to enter the desired tap setting. After the group is edited, press the ENTER key. Move the cursor to the next group and perform the same procedure, and so on.

Courtesy of http://BlackRadios.terryo.org

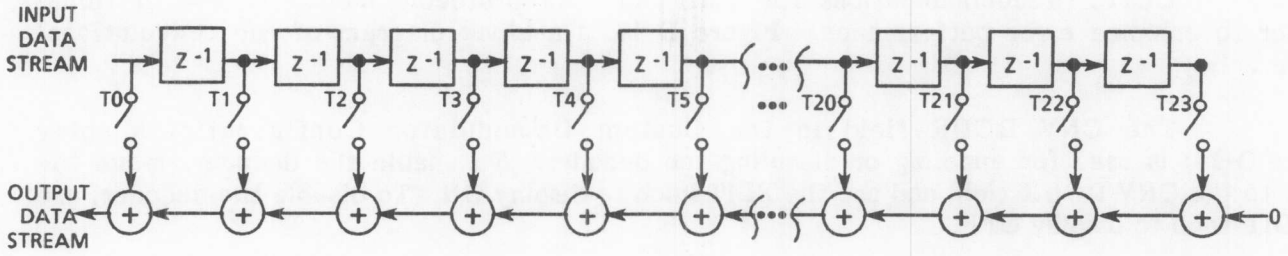

Figure D-18. Flexible Demodulator Tapped Delay Line

D.5.1.4.4.8 ***Copying Parameters from a Standard QAM Demodulator***

The operator has the capability to copy the characteristic parameters from a standard QAM demodulator while in the QAM formatted Custom Demodulator Configuration display. This may be useful for creating demodulators with nonstandard protocols that have similar characteristics to standard protocols.

To copy parameters, move the cursor to the COPY field on the bottom line of the display. Pressing the CURSOR knob or the ENTER key causes the bottom line of the display to read "COPY FROM QAM DEMOD: XXXX", where XXXX is one of the standard QAM demodulator parameters. The EDIT knob is used to scroll through the QAM protocols listed in **Table D-3.**

When the desired protocol is displayed, pressing the CURSOR knob or ENTER key causes the protocol to be selected. All applicable fields in the Custom Demodulator Configuration display are automatically updated with values associated with the selected protocol. These values can be further edited if desired.

D.5.1.4.5 **Entering Custom OOK Demodulator Parameters**

Selecting OOK in the TYPE field in the Custom Demodulator Configuration display causes the display to be formatted as that shown in **Figure D-19.** The following paragraphs provide details on entering parameters in this display.

D.5.1.4.5.1 ***Entering the Carrier Frequency***

The CARRIER FREQ field in the Custom Demodulator Configuration display **(Figure D-19)** is used to enter the carrier frequency. The carrier frequency can be any value from 200 Hz to 3800 Hz in 5 Hz steps. To change the frequency, move the cursor to the CARRIER FREQ field and use the EDIT knob or numeric entry keys.

Courtesy of http://BlackRadios.terryo.org

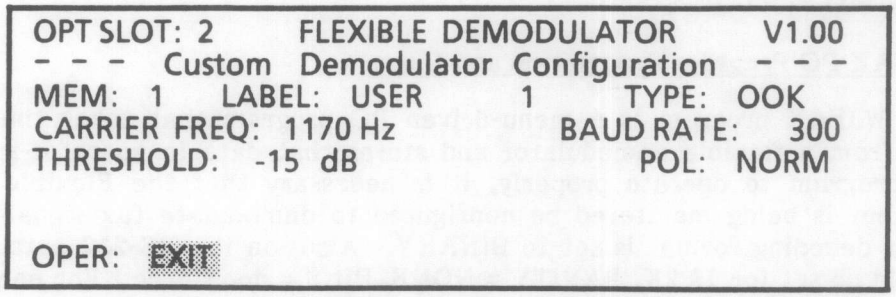

Figure D-19. Example of the Custom Demodulator Configuration Display (OOK Type)

D.5.1.4.5.2 ***Entering the Baud Rate***

The BAUD RATE field in the Custom Demodulator Configuration display (**Figure D-19**) is used to enter the baud rate of the incoming data. The baud rate can be any value from 0 to 1200 Hz in 1 Hz steps. To change the baud rate, move the cursor to the BAUD RATE field and use the EDIT knob or numeric entry keys.

D.5.1.4.5.3 ***Entering the Signal Threshold Level***

The THRESHOLD field in the Custom Demodulator Configuration display (**Figure D-19**) is used to enter the threshold level for incoming CW signals. The threshold level can be any value from -40 to 0 dB in 1 dB steps. To change the threshold level, move the cursor to the THRESHOLD field and use the EDIT knob or numeric entry keys.

D.5.2 USING THE WJ-954X/FLX PC SOFTWARE PROGRAMS TO DISPLAY FAX AND VFT DATA

Provided with the Flexible Demodulator option is a floppy disc that contains WJ-954X/FLX Software PC Programs (WJ P/N 841896) that can be used to display received character transmissions. Two programs are provided: one program called WJFAX is used to display FAX data; the second program called WJVFT is used to display VFT data. The following is a list of hardware required to operate the programs:

- WJ-954X Digital FDM Demultiplexer
- WJ-954X/FLX Flexible Demodulator Option
- IBM-Compatible PC-386 Computer
- VGA Monitor
- HP LaserJet Printer (optional)

Courtesy of http://BlackRadios.terryo.org

The RS-232 port of the PC should be connected to the RS-232 TXDx output of the flexible demodulator (refer to **paragraph D.4.3.2**). The following paragraphs provide more details on the WJFAX and WJVFT PC programs.

D.5.2.1 WJFAX PC Program Description and Usage

The WJFAX program is a menu-driven PC program that takes the demodulated binary FAX data from a flexible demodulator and stores that data in operator-specified files. For the WJFAX program to operate properly, it is necessary that the Flexible Demodulator whose RS-232 output is being monitored be configured to demodulate fax signals and that its received character decoding format is set to BINARY. Also, on the RS-232 output screen, the BAUD RATE should be set for 19.2K, PARITY = NONE, Bit 8 = don't care. For each page of the FAX data file, the program performs one or two dimensional decoding on a line-by-line basis according to the Group 3 Facsimile Standard. Decoded FAX pages are stored in the working directory with operator-assigned file names. These saved FAX pages may be displayed on a VGA monitor. Hard copies of the pages may be obtained by using an HP LaserJet printer.

The WJFAX program is a menu-driven PC program which can be easily controlled by either a keyboard or a combination of a mouse and a keyboard. **Figure D-20** shows the WJFAX Main Display. The command box, located in the upper right-hand corner of the VGA monitor, contains all of the available commands. Each command may be executed by either clicking the left mouse button while the mouse is placed on the desired field, or, by pressing the letter key associated with the desired command. The control data box, located in the lower right-hand corner of the VGA monitor, contains the following information:

Calling #:	Transmitter's fax number
Called #:	Receiver's fax number
Bit Rate:	Data Transmission Rate
Dimension:	Coding scheme dimension (1 or 2)
Password:	Additional security information
Subaddress:	Additional routing information

Control data is displayed on the WJFAX Main Display and the WJFAX Receive Data Display only.

D.5.2.1.1 Running the WJFAX Program

The WJFAX program may be copied to the PC hard drive for operation. Once installed on the hard drive, type WJFAX at the DOS prompt and press enter to run the WJFAX program. Running the WJFAX program from the hard drive provides faster program execution.

To run the program from a floppy drive, insert the supplied disk into the selected floppy drive, select that drive, type WJFAX at the DOS prompt, and press enter to run the WJFAX program. The VGA monitor displays the WJFAX Main Display shown in **Figure D-20**. At this time, there is no displayed FAX page. For information on displaying a FAX page, refer to **paragraph D.5.2.1.3**.

D.5.2.1.2 Saving FAX Data

The WJFAX program saves FAX data from a selected Flexible Demodulator. The desired Flexible Demodulator's RS-232 output must be connected to the PC's RS-232 COM1 port. For information on selecting a desired Flexible Demodulator's RS-232 output refer to **paragraph D.5.1.3**.

Courtesy of http://BlackRadios.terryo.org

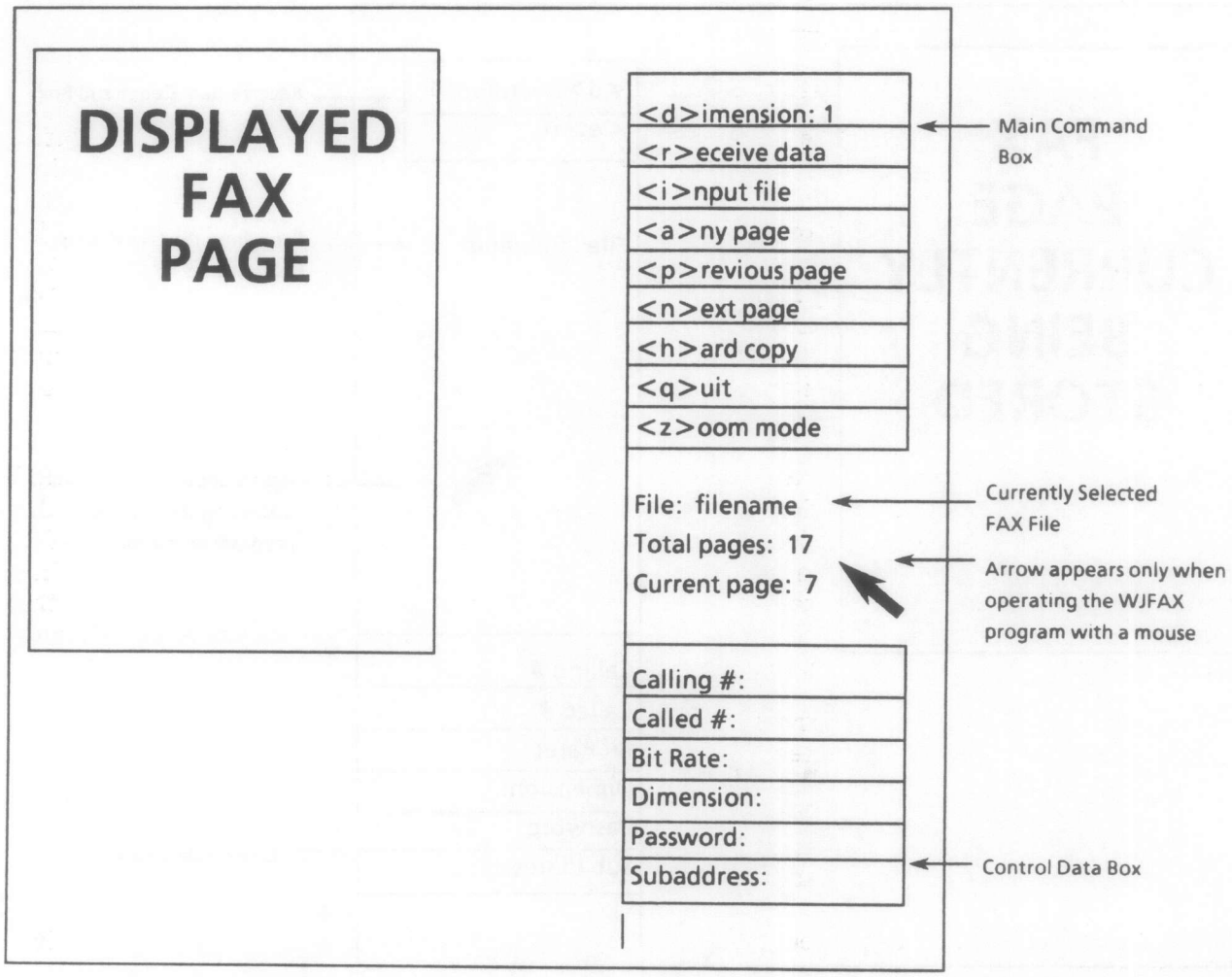

Figure D-20. Example of the WJFAX Main Display

To save the incoming FAX data, select the "<r>eceive data" field from the Main Command box (shown in **Figure D-20**) with the mouse, or by pressing the "R" key on the keyboard. This causes the "Data file:" prompt to appear in the upper left-hand corner of the display prompting the user to create a DOS file for storing the incoming FAX data. Enter the desired drive, directory, and file name. File names may have up to eight characters and a three-character extension. If the operator enters only a filename, the FAX data is stored in the current operating directory. Once the file name is selected, press the enter key. For example entering "C:\fax\filename" tells the WJFAX program to save the FAX data on the C: drive, in the fax directory, as the file named filename. This stores the FAX data and causes the WJFAX Receive Data Display to appear (**Figure D-21**). The FAX data is presented in the display as it is stored.

Courtesy of http://BlackRadios.terryo.org

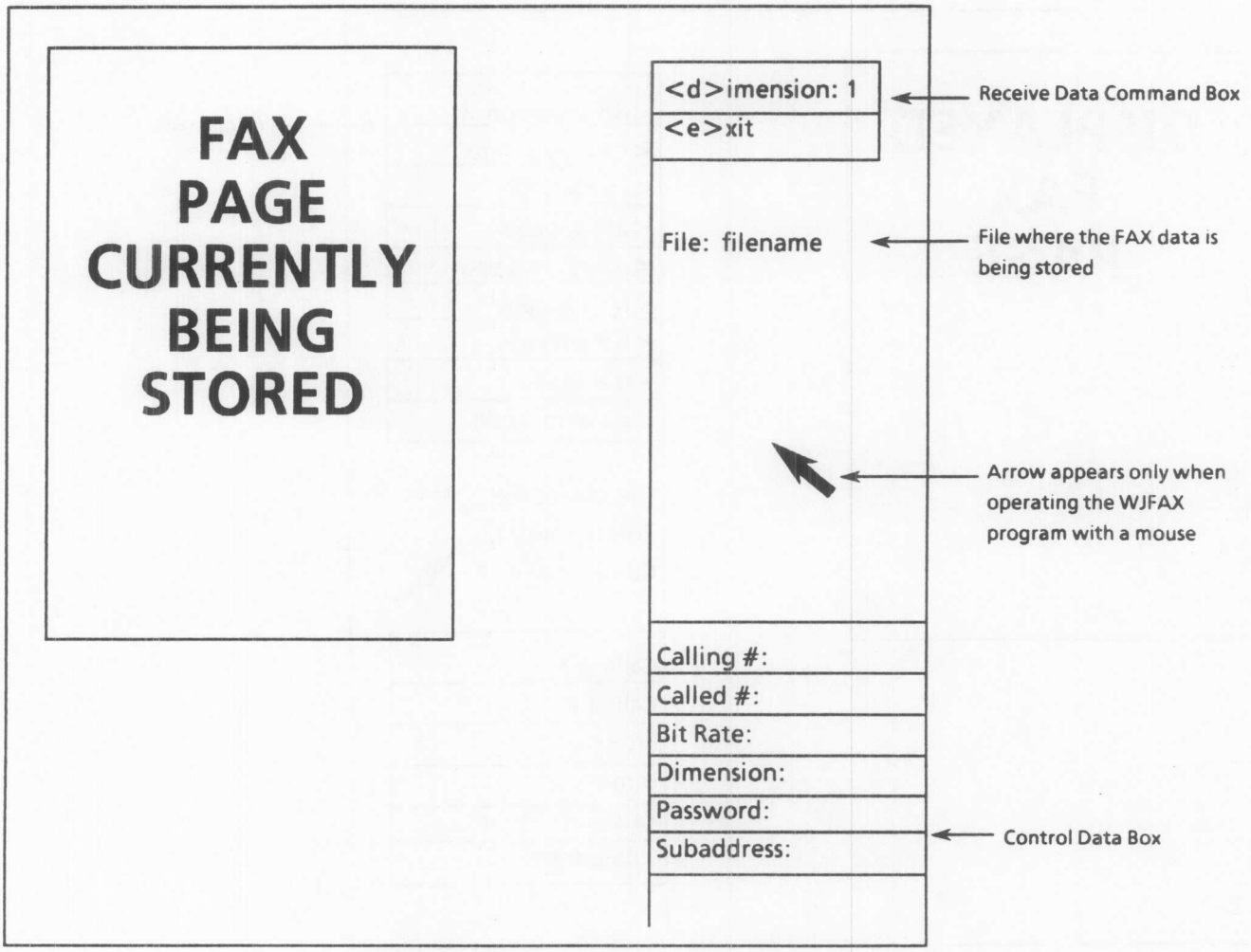

Figure D-21. Example of the WJFAX Receive Data Display

When saving FAX data, two commands are available, the <d>imension command and the <e>xit command. The <d>imension command allows the operator to select either one- or two-dimensional decoding as the type of FAX data decoding scheme used by the WJFAX program. The dimension that provides the correctly displayed FAX page should be selected. To select the desired dimensional decoding scheme, select the "<d>imension" field from the WJFAX Get FAX Display with the mouse, or press the "D" key on the keyboard. The selected dimension toggles between 1 and 2 each time the dimension field is selected. The <e>xit command allows the operator to stop saving FAX data and return to the WJFAX Main Display. To exit to the WJFAX Main Display, select the "<e>xit" field from the WJFAX Get FAX Data Display using the mouse, or press the "E" key on the keyboard.

Courtesy of http://BlackRadios.terryo.org

D.5.2.1.3 Displaying a Saved FAX

To display a saved FAX, select the "<i>nput file" field from the WJFAX Main Display (**Figure D-20**) using the mouse, or press the "I" key on the keyboard. This causes the "Data file:" prompt to appear, prompting the operator to enter the desired file name. Once the file name is entered, press the Enter key. The WJFAX program loads the selected file. Once the file is loaded, the file name and the total number of pages contained in that file appear below the Main Command box.

The <d>imension command allows the operator to select either one- or two-dimensional decoding as the type of FAX data decoding scheme used by the WJFAX program. The operator should select the dimension that provides the best displayed FAX page. To select the dimensional decoding, select the "<d>imension" field from the WJFAX Main Display with the mouse, or press the "D" key on the keyboard. The selected dimension toggles between 1 and 2 each time the field is selected.

To display a selected FAX page, select the "<a>ny page" field from the WJFAX Main Display with the mouse, or press the "A" key on the keyboard. The selected page is displayed on the VGA monitor. Other pages of the selected FAX file may be viewed by repeating the above procedure or by using the "<p>revious page" or "<n>ext page" command fields.

If no page is displayed after selection, change the dimensional decoding selection, and reselect the desired page. The page should be displayed correctly.

D.5.2.1.4 Zooming in a Displayed FAX Page Using the Keyboard

The WJFAX program allows the operator to zoom in on a desired portion of the FAX to see greater detail in a selected area of the FAX page. To zoom in on a desired portion of the displayed FAX page, select the "<z>oom mode" field from the Main Command box in the WJFAX Main display (**Figure D-20**) by pressing the "Z" key on the keyboard. The WJFAX Zoom Display shown in **Figure D-22** appears and the Zoom Command box becomes available. The Zoom Command box contains all of the associated zoom commands. The Zoom Area box appears in the upper left-hand corner of the displayed FAX page. The zoom area box contains the area that is to be expanded (zoomed) for greater detail.

To select the area to be "zoomed", move the Zoom Area box to the desired location using the left, right, up, and down arrow keys. To horizontally expand the Zoom Area box, press the **End** key. To horizontally compress the Zoom Area box, press the **Home** key. To vertically expand the Zoom Area box, press the **Page Down** key. To vertically compress the Zoom Area box, press the **Page Up** key.

Courtesy of http://BlackRadios.terryo.org

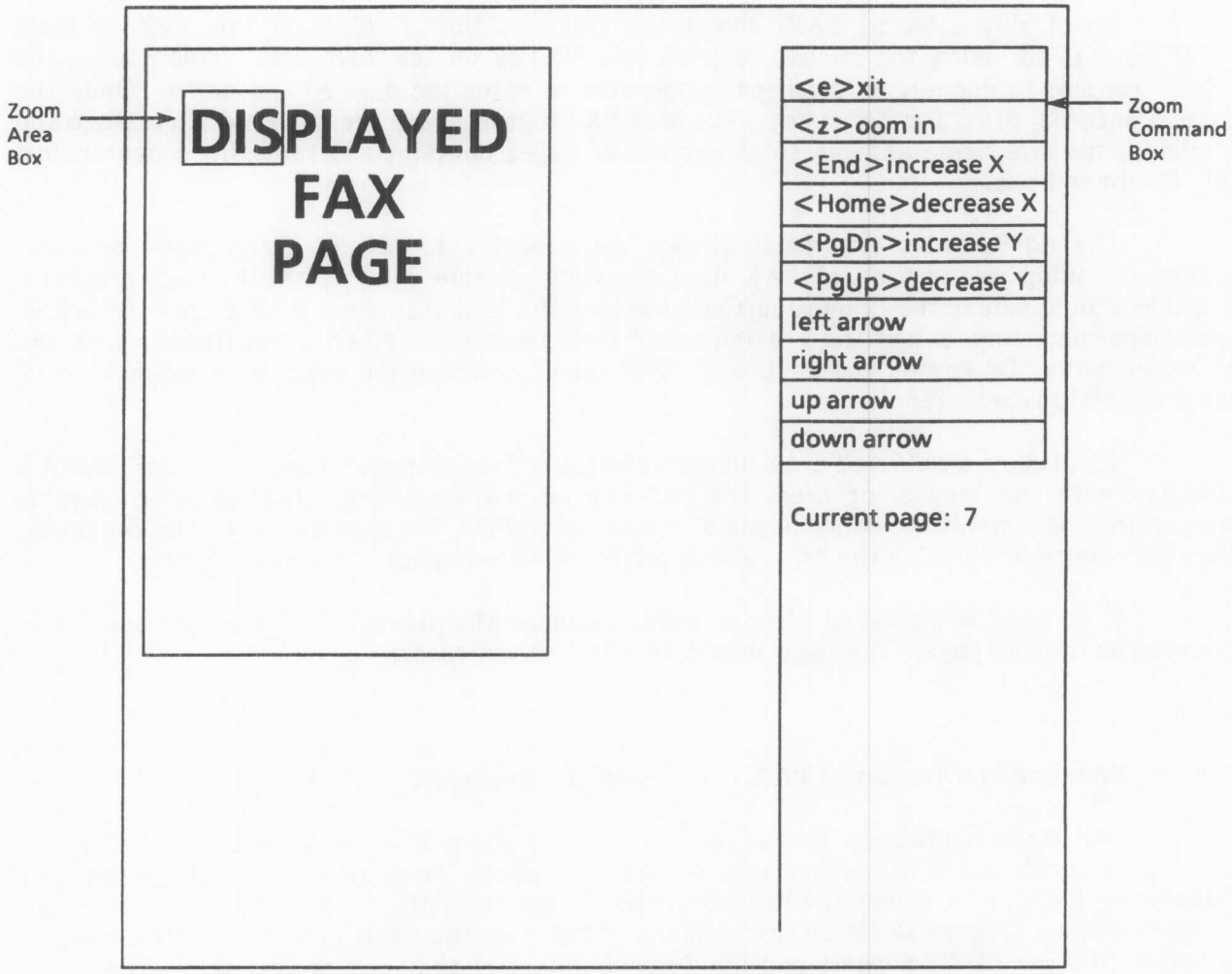

Figure D-22. Example of the WJFAX Zoom Display When Using the Keyboard

Once the Zoom Area box has been sized and placed as desired, press the "Z" key to expand (zoom) that area. The WJFAX program expands the zoom area, and the Zoom Command box changes to allow the operator to move around within the expanded FAX page. **Figure D-23** shows the WJFAX Zoom Display when zoomed into a selected area. Pressing the left, right, up, and down arrow keys moves the expanded display in the chosen direction. Pressing the "Z" key returns the display to the original zoom display shown in **Figure D-22.**

To exit from the WJFAX Zoom Display and return to the WJFAX Main Display, press the "E" key while in the unexpanded WJFAX Zoom Display.

Courtesy of http://BlackRadios.terryo.org

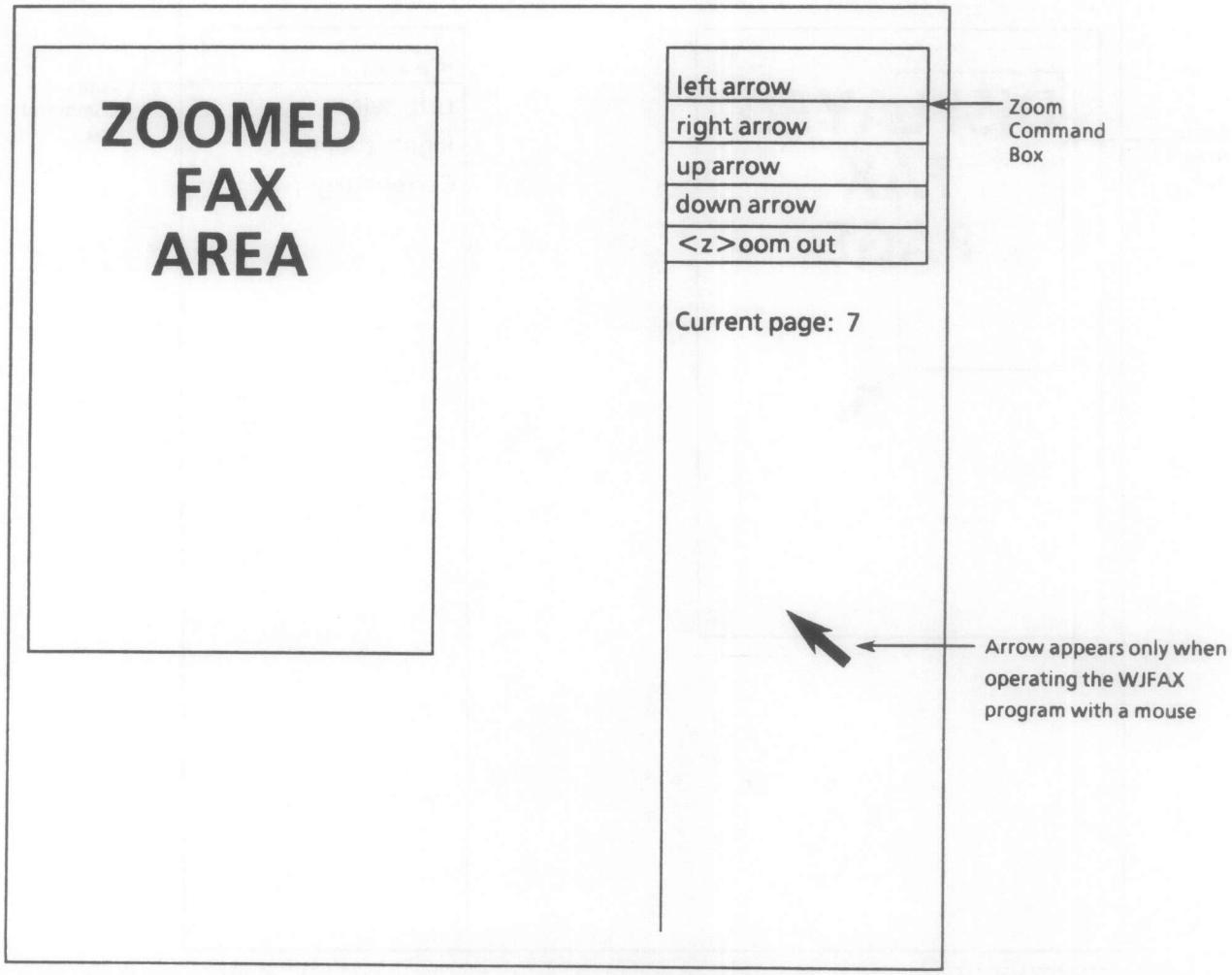

Figure D-23. Example of the WJFAX Zoom Display When Zoomed into a Selected Area.

D.5.2.1.5 Zooming in a Displayed FAX Page Using a Mouse

The WJFAX program allows the operator to zoom in on a desired portion of the displayed FAX page. To zoom in on a desired portion of the displayed FAX page using a mouse, select the "<z>oom mode" field from the WJFAX Main Display (**Figure D-20**). The WJFAX Zoom Display shown in **Figure D-24** appears, and the Zoom Command box becomes available.

To select the area to be expanded (the zoom area), place the mouse in the upper left-hand corner of the desired area, click the left mouse button, move the mouse to the lower right-hand corner of the desired area, and press the right mouse button. The WJFAX program expands the selected area to fill the area that previously displayed the entire FAX page. **Figure D-22** shows an example of the WJFAX Zoom Display when zoomed into a selected area. Selecting the left, right, up, and down arrow key fields moves the expanded display in the selected direction. Selecting the "<z>oom out" field returns the display to the unexpanded WJFAX Zoom Display shown in **Figure D-24.**

Courtesy of http://BlackRadios.terryo.org

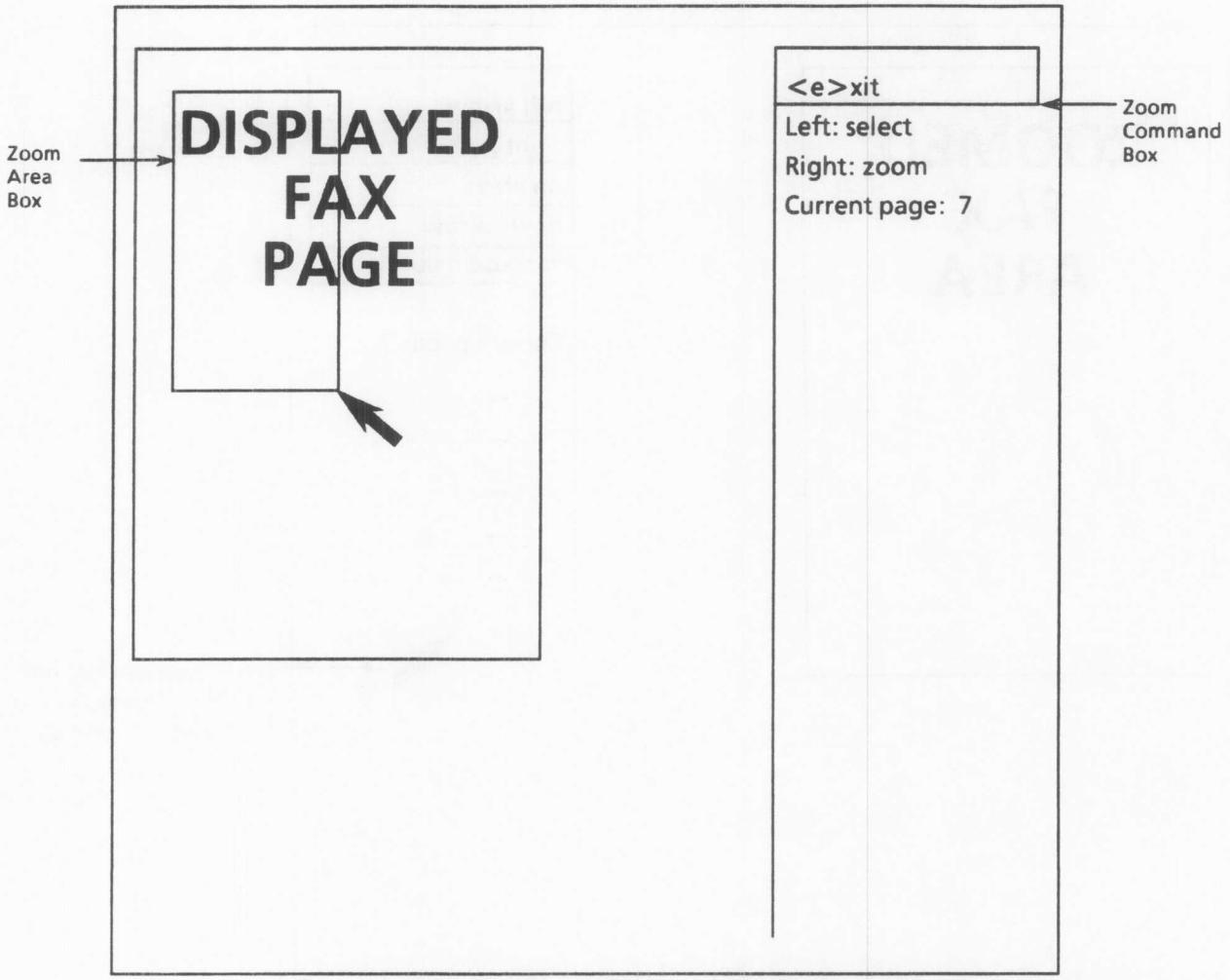

Figure D-24. Example of the WJFAX Zoom Display When Using the Mouse

To exit from the WJFAX Zoom Display and return to the WJFAX Main Display, select the "<e>xit" field from the Zoom Command box with the mouse or press the "E" key on the keyboard while in the unexpanded WJFAX Zoom Display.

D.5.2.1.6 Printing a Displayed FAX Page

The WJFAX program allows the operator to print a displayed FAX page on an HP LaserJet printer. To print a displayed FAX page, select and display the page as described in **paragraph D.5.2.1.3.** Then select the "<h>hard copy" field from the Main Command box with the mouse, or depress the "h" key on the keyboard. This causes the display to change to the WJFAX Print Display shown in **Figure D-25** with the print command box available. Using the Print Command box, the operator can select the resolution in dots-per-inch (dpi) of the printed FAX page. The following resolutions are offered:

75 dpi,
100 dpi,
150 dpi, and
300 dpi.

Courtesy of http://BlackRadios.terryo.org

The default resolution is 100 dpi. To choose a different resolution, select the "<d>pi" field from the Print Command box with the mouse, or depress the "D" key on the keyboard. Continue selecting the field until the desired resolution value is displayed.

Only the 100 dpi selection provides a full page 8 1/2" x 11" output when printing with an HP LaserJet printer. Selections of 150 and 300 dpi provide printed outputs that are smaller than 8 1/2" x 11". the 75 dpi selection provides a printed output that is larger than 8 1/2"x 11". Selecting the "<c>ancel" field from the Print Command box with the mouse, or depressing the "C" key on the keyboard cancels the printing operation and returns the WJFAX Main Display.

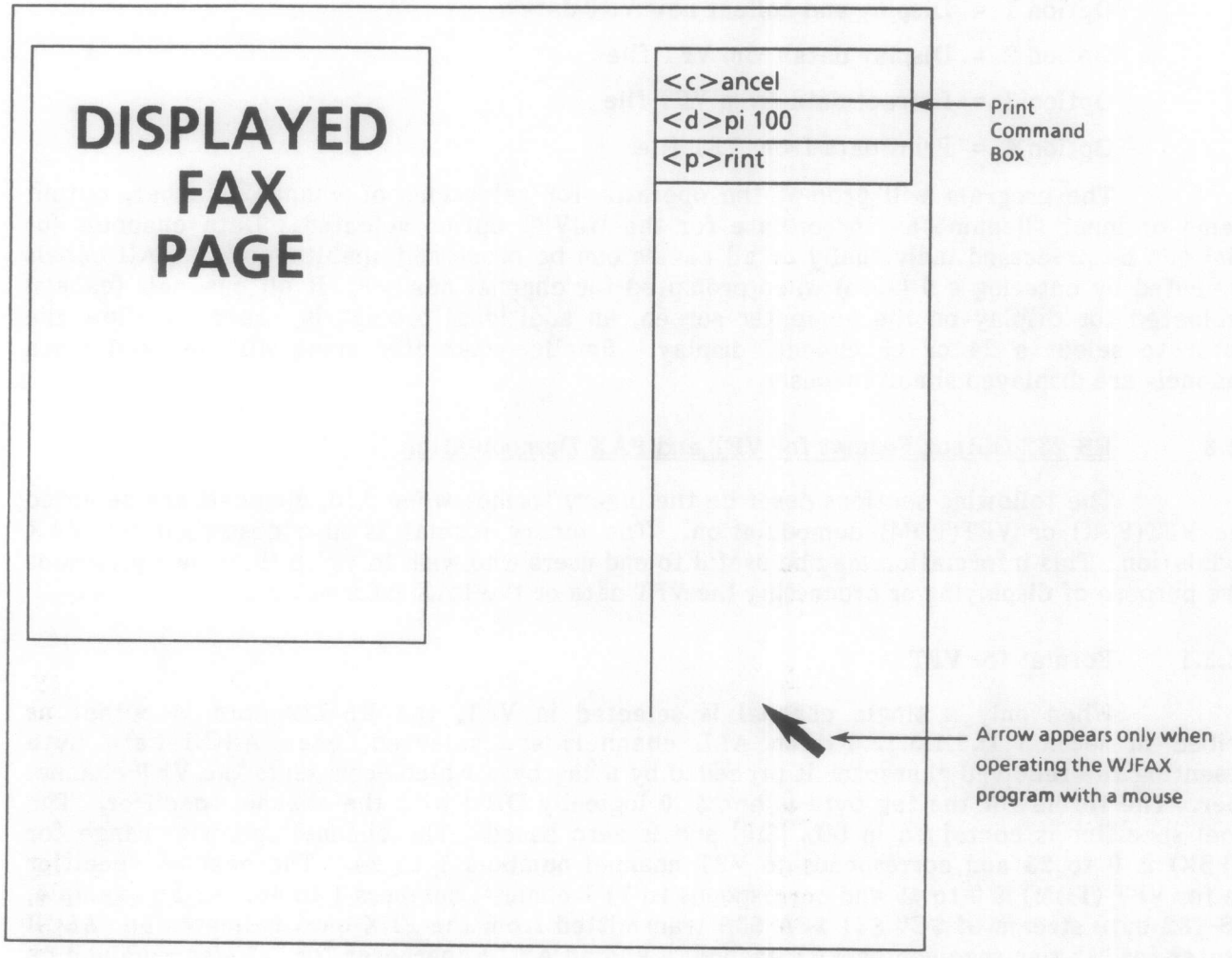

Figure D-25. Example of the WJFAX Print Display

Courtesy of http://BlackRadios.terryo.org

D.5.2.2 WJVFT PC Program Description and Usage

The WJVFT PC program takes the demodulated VFT and MODEM data from the flexible demodulator and stores the data into a specified file. The program can simultaneously display up to 46 VFT channels. Use this program to display and store data from all or one VFT channel or from a MODEM.

When using WJVFT, make sure the RS-232 output screen has the BAUD RATE=19.2K, PARITY=NONE and Bit 8=0.

When running this program, enter the program and one of the following options (i.e. WJVFT 0):

Option 0 = Display new VFT data

Option 1 = Display and collect new VFT data

Option 2 = Display data from VFT file

Option 3 = Extract data from VFT file

Option 4 = Print data from VFT file

The program will prompt the operator for selections of channel number, output filename or input filename as appropriate for the WJVFT option selected. Data channels (or canals) can be processed individually or all canals can be processed simultaneously. All canals are selected by entering a 0 (zero) when prompted for channel number. If all channels (canals) are selected for display on the computer screen, an additional prompt is issued to allow the operator to select a 24 or 46 channel display. Smaller character sizes will be used when 46 channels are displayed simultaneously.

D.5.2.3 RS-232 Output Format for VFT and FAX Demodulation

The following sections describe the binary format when ALL channels are selected in the VFT(FSK) or VFT(TDM) demodulation. The binary format is also described for FAX demodulation. This information may be useful to end users who wish to write their own programs for the purpose of displaying or processing the VFT data or the FAX information.

D.5.2.3.1 Format for VFT

When only a single channel is selected in VFT, the RS-232 data is output as described in section D.5.1.3.1. When ALL channels are selected, each ASCII data byte representing the received character is preceded by a tag byte which represents the VFT channel number. The format of the tag byte is hex $C0 logically OR'd with the channel specifier. The channel specifier is contained in bits [5:0] and is zero based. The channel specifier range for VFT(FSK) is 0 to 23 and corresponds to VFT channel numbers 1 to 24. The channel specifier range for VFT (TDM) is 0 to 45 and corresponds to VFT channel numbers 1 to 46. As an example, an RS-232 byte stream of $C7 $31 $EA $6B transmitted from the FLX card indicates an ASCII character for "1" was received on VFT channel 8 and an ASCII character for "k" was received on VFT channel 43. Note that each data byte and each tag byte is framed by the typical RS-232 start and stop bits and may include the optional parity bit.

IMPORTANT NOTE: When ALL channels are selected, the character decoder **cannot** be set to binary and the bit-8 field on the RS-232 output screen **must** be set for 0. Violations on either of these two accounts may generate data bytes that look like tag bytes. The BAUD RATE and PARITY on the RS-232 output screen must be set to be compatible with the receiving PC or other equipment.

Courtesy of http://BlackRadios.terryo.org

D.5.2.3.2 **Format for FAX**

The RS-232 output from the FAX demodulation is comprised of two types of data. They are the image data (defined by CCITT T.4 rec.) and the control modem data (defined by CCITT T.30 rec.). The data is in raw binary form (as received) and is transmitted according to the settings on the RS-232 output screen. Each group of 8 raw bits is framed by the typical RS-232 start and stop bits and may include the optional parity bit.

IMPORTANT NOTE: On the RS-232 output screen, the BAUD RATE **must** be set to 19.2K to accommodate the potentially higher data rates associated with FAX transmissions. The PARITY field must be set to be compatible with the receiving PC or equipment. The bit-8 field is irrelevant since it is not used when the character decoding format is binary (the character decoding format is automatically set to binary when FAX demodulation is selected).

The two types of data (image data and control data) are distinguished by two unique four-byte delimiting sequences. A four-byte delimiting sequence of $7E $7E $7E $7E indicates that all following data is T.30 control data. This will be true until a four-byte delimiting sequence of $7E $7E $7E $35 is received which indicates that all following data will be T.4 image data. The two delimiting sequences act as a "toggle switch" indicating how the ensuing data should be interpreted.

Some key ideas concerning the T.4 and T.30 output data follow. Refer to the CCITT recommendations T.30 and T.4 as required.

1. Per CCITT, each time a T.30 transmission is initiated by either the receiving or transmitting FAX station, a preamble which consists of repeated flag sequences (hex $7E) is transmitted for approximately one second. At the end of the preamble, transmission of one or more HDLC frames occurs. Each HDLC frame starts with one or more flag fields (hex $7E). The critical idea relating to all of this is that **the T.30 data which is transmitted by the FLX card does not include the preamble and does not include the beginning flag fields of the first HDLC frame following the preamble.** In other words, after the four-byte T.30 delimiting sequence is transmitted, the first actual T.30 data to be transmitted would be the "address" field in the first HDLC frame. All ensuing T.30 data is transmitted. T.30 data transmission willl stop when the T.30 FSK modulation signal is detected as being turned off.

2. The four-byte T.4 delimiting sequence is transmitted **each time** the T.4 modulation training sequence is detected as being complete. There is one exception to this which is explained in the next paragraph.

   Per CCITT, a T.4 modulation training sequence is sent by the transmitting FAX station to the receiving FAX station and is used by the receiving FAX station for conditioning its symbol timing, carrier recovery, and equalizer circuits. This training sequence is sent prior to sending a 1.5 second non-image training check (TCF) and also prior to sending the actual image data. The FLX card's FAX algorithm is smart enough to detect when the non-image training check (TCF) is being sent and **will not** transmit the four-byte delimiting sequence prior to it. It **will** transmit the delimiting sequence prior to the actual image data. T.4 image data will stop being sent when the T.4 modulation is detected as being turned off.

Courtesy of http://BlackRadios.terryo.org

Note that the TCF data (all 0's or corrupted 0's if the transmission line is degraded enough) will still be sent out and will be interpreted as T.30 data since the T.4 delimiter was not sent. This is not a problem since the 0's do not look like any legitimate T.30 sequence. Even noise corrupted zeros will have a vanishingly small probability of looking like legitimate T.30 data.

3. All T.4 and T.30 data is transmitted out of the FLX card in the same time order that it was received. When programming a piece of external equipment to interpret the data stream, pay attention to the MSB/LSB orientation of the equipment's RS-232 receive shift register. A demodulated T.30 bit pattern of 10110001 (the left bit is the earliest in time) will result in a FLX card transmission of the same 10110001 where the left bit is transmitted first. The receiving equipment's RS-232 shift register will receive the byte as hex $B1 if the earliest received bit in time ends up in the MSB of the shift register. Conversely, if the earliest received bit in time ends up in the LSB of the shift register, the byte will be received as hex $8D. Obviously, these details must be considered when programming external equipment to parse the T.4 and T.30 data streams for specific bit patterns.

D.5.3 REMOTE OPERATIONS

Table D-8 lists the commands and queries used for remote control of the WJ-954X/FLX Flexible Demodulator. Command arguments are accepted as forgiving numeric representation (nrf); response formats are provided as numeric response integers (nr1). See **paragraph 2.6.2** in the WJ-954X Installation and Operation Manual for further details on numeric data representation.

D.5.3.1 Selecting the WJ-954X/FLX Option for Control

To select a Flexible Demodulator, use the OPS command and argument to select option slots 2, 3, or 4. This command must always precede, on the same program line, any /FLX option command intended for slots 2, 3, or 4. If a slot number is not specified on the program line, the WJ-954X directs the command to the option in slot 1. Each remote command on the program line should be delimited with a semicolon. Before selecting the option, it can first be determined in which of the four option slots the Flexible Demodulator option is located (*OPT?). Then send the OPS command with an argument of 2, 3, or 4 (as determined by option slot location) followed by a semicolon and the rest of the program line. Subsequent to processing a command line, the WJ-954X would return to its control of slot 1. See the main manual for more information on the *OPT? query.

Table D-8. Remote Commands for the WJ-954X/FLX Option

Command	Response	Description
OPS nrf		Select the option slot number containing the Flexible Demodulator to be controlled.
OPS?	OPS nr1	Request the current selected option slot number. Response example: OPS 2 Reset value: 1

Courtesy of http://BlackRadios.terryo.org

Table D-8. Remote Commands for the WJ-954X/FLX Option (Continued)

Command	Response	Description
ASG 1,nrf,nrf		Select the frame number (first nrf) and demodulator number (second nrf) to input to the flexible demodulator. Frame range: 0 to 8 Demodulator range: 0 to 24 (0 turns off the flexible demodulator.)
ASG 1?	ASG 1,nr1,nr1	Request the frame (first nr1) and the demodulator (second nr1) connected to the flexible demodulator. Response example: ASG 1,7,11
FDM nrf		Select the flexible demodulator operating mode (see **paragraphs D.5.1.2.2** and **D.5.1.2.3** for discussions). nrf Mode 0 Off 1 Test 2 MODEM (FSK) 3 MODEM (QAM) 4 VFT (FSK) 5 FAX 6 Reserved 7 VFT (TDM) 8 SIGNALLING 9-31 Not Used 32 User
FDM?	FDM nr1	Request the current flexible demodulator operating mode. Response example: FDM 4 Reset value: 0
FDP nrf		Set the demodulator protocol where nrf is a number defining the protocol for the selected operating mode. The values of nrf are dependent upon the current operating mode (FDM command). The following **Tables A** thru **G** provide details on the parameters entered with the FDP command for MODEM (FSK), MODEM (QAM), VFT (FSK), VFT (TDM), FAX, User, and SIGNALLING operating modes.

Courtesy of http://BlackRadios.terryo.org

Table D-8. Remote Commands for the WJ-954X/FLX Option (Continued)

Command	Response	Description
FDP nrf (continued)		

Table A. FDP Command Valid Protocols for MODEM (FSK) Operating Mode

Modem	nrf
B103(FWD)	0
B103(REV)	1
B113(FWD)	2
B113(REV)	3
B202C	4
V.21(FWD)	5
V.21(REV)	6
V.23(FWD)	7
V.23(REV)	8
V.23 ALT(FWD)	9
V.23 ALT (REV)	10

Table B. FDP Command Valid Protocols for MODEM (QAM) Operating Mode

Modem	nrf	
B201B	0	
B208A	1	
B212A (FWD)	2	
B212A (REV)	3	
V.22 (FWD)	4	
V.22 (REV)	5	
V.22 ALT (FWD)	6	
V.22 ALT (REV)	7	
V.22bis (FWD)	8	
V.22bis (REV)	9	
V.26A	10	
V.26B	11	
V.26bis	12	
V.27	13	
V.29	14	
V.29 ALT A	15	
V.29 ALT B	16	
V.32 (FWD)	17	These protocols are NOT available for the WJ-954X/FLX-1 option.
V.32 (REV)	18	
V.32 ALT (FWD)	19	
V.32 ALT (REV)	20	
V.33	21	
V.33 ALT	22	

Courtesy of http://BlackRadios.terryo.org

Table D-8. Remote Commands for the WJ-954X/FLX Option (Continued)

Command	Response	Description
FDP nrf (continued)		

Table B. FDP Command Valid Protocols for MODEM (QAM) Operating Mode (Continued)

Modem	nrf
V.26bis ALT	23
V.26ter	24
V.26ter ALT	25
V.27bis	26
V.27bis ALT	27
V.27ter	28
V.27ter ALT	29

Table C. FDP Command Valid Protocols for VFT (FSK) Operating Mode

VFT (FSK) Protocol	nrf
Reserved	0
Reserved	1
R.35	2
R.35 ALT	3
R.35bis	4
R.37	5
R.37 ALT	6
R.38A	7
R.38B	8
R.39	9
R.39 ALT 1	10
R.39 ALT 2	11

Table D. FDP Command Bit Mapping for FAX Operating Mode

FAX Protocol	nrf
Group 3 - AUTO	0
Group 3 - 9600	1
Group 3 - 7200	2
Group 3 - 4800	3
Group 3 - 2400	4

Courtesy of http://BlackRadios.terryo.org

Table D-8. Remote Commands for the WJ-954X/FLX Option (Continued)

Command	Response	Description
FDP nrf (continued)		

Table E. FDP Command Valid Protocols for User Operating Mode

User Protocol	nrf
User 1	0
User 2	1
User 3	2
User 4	3
User 5	4

Table F. FDP Command Valid Protocols for VFT (TDM) Operating Mode

VFT (TDM) Protocol	nrf
V.26A R.101A	0
V.26A R.101B	1
V.26B R.101A	2
V.26B R.101B	3
V.26bis R.101A	4
V.26bis R.101B	5
V.26ter R.101A	6
V.26ter R.101B	7
V.27bis ALT R.101A	8
V.27bis ALT R.101B	9
V.27ter ALT R.101A	10
V.27ter ALT R.101B	11
V.29 R.101A	12
V.29 R.101B	13
V.29 ALT A R.101A	14
V.29 ALT A R.101B	15
V.29 ALT B R.101A	16
V..29 ALT B R.101B	17

Table G. FDP Command Valid Protocols for SIGNALLING Operating Mode

SIGNALLING Protocol	nrf
Q.23	0
Q.35	1
Q.23/Q.35	2

Courtesy of http://BlackRadios.terryo.org

Table D-8. Remote Commands for the WJ-954X/FLX Option (Continued)

Command	Response	Description
FDP?	FDP nr1	Request the current selected demodulator protocol. (See **Tables A** thru **G**).
FDC nrf		Set the received character decoding format parameters. See **Table H** for bit mapping of nrf.

Table H. FDC Command Character Decoding Format

Bits [02,01,00] = Character Type. (Refer to **paragraph D.5.1.2.5**)
- 000 = ASCII-7
- 001 = ASCII-8
- 010 = BAUDOT-US
- 011 = EBCDIC
- 100 = BINARY
- 101 = BAUDOT - ITA2
- 110 = SYNCHRONOUS
- 111 = Reserved

Bit [03] = Parity. (Refer to **paragraph D.5.1.2.6**)
- 0 = None
- 1 = On

Bit [04] = Parity Type. (Refer to **paragraph D.5.1.2.6**)
- 0 = Even
- 1 = Odd

Bit [05] = Bit Polarity. (Refer to **paragraph D.5.1.2.7**)
- 0 = Normal
- 1 = Inverted

FDC?	FDC nr1	Request the current selected decoding parameters (see **Table H**).
FDD nrf		Set the display mode. This command enables or disables the analog outputs of the flexible demodulator by setting nrf as follows: **nrf** **Display Mode** 0 Off 1 On
FDD?	FDD nr1	Request the current selected display mode. Response example: FDD 1 Reset value: 0

Courtesy of http://BlackRadios.terryo.org

Table D-8. Remote Commands for the WJ-954X/FLX Option (Continued)

Command	Response	Description
FDO nrf		Set the output characteristics of the flexible demodulator. See **Table** I for bit mapping of nrf.

Table I. FDO Command Output Characteristics Format

Bits [01,00] = Output Baud Rate. (Refer to **paragraph D.5.1.3.1**)
- 00 = 9600
- 01 = 19200
- 10 = Reserved
- 11 = Reserved

Bit [02] = Output Parity. (Refer to **paragraph D.5.1.3.1**)
- 0 = Off
- 1 = On

Bit [03] = Output Parity Type. (Refer to **paragraph D.5.1.3.1**)
- 0 = Even
- 1 = Odd

Bit [04] = State of bit 8 when 7-bit ASCII data is output. (Refer to **paragraph D.5.1.3.1**)
- 0 = 0
- 1 = 1

Bit [05] = Reconstruction Filter. (Refer to **paragraph D.5.1.3.2**)
- 0 = Out
- 1 = In

Bit [06] = Limiter. (Refer to **paragraph D.5.1.3.2**)
- 0 = Out
- 1 = In

FDO ?	FDO nr1	Request the current selected flexible demodulator output characteristics (see **Table** I).

Courtesy of http://BlackRadios.terryo.org

Table D-8. Remote Commands for the WJ-954X/FLX Option (Continued)

Command	Response	Description
FDT nrf		Set the VFT channel mode for the current VFT protocol. The nrf is a bit-mapped value from 1 to X, where the range of nrf (X) is determined by the current selected VFT protocol. **Tables J and K** list the number of channels available and the nrf range for each VFT protocol.

Table J. VFT (FSK) Protocols Channel Selections

VFT (FSK) Protocol	Number of Channels	nrf range (See Note)
R.35	24	1 to 24
R.35 ALT	24	1 to 24
R.35bis	12	1 to 12
R.37	12	1 to 12
R.37 ALT	12	1 to 12
R.38A	6	1 to 6
R.38B	8	1 to 8
R.39	20	1 to 20
R.39 ALT 1	20	1 to 20
R.39 ALT 2	15	1 to 15

Note: Entering a "25" in the nrf range for a VFT (FSK) protocol causes all channels to be output simultaneously.

Courtesy of http://BlackRadios.terryo.org

Table D-8. Remote Commands for the WJ-954X/FLX Option (Continued)

Command	Response	Description
FDT nrf (Continued)		

Table K. VFT (TDM) Protocols Channel Selections

VFT (TDM) Protocol	Number of Channels	nrf Bits [05-00] range (See Note)
R.101A (50 baud)	46	1-46
R.101A (75 baud)	22	1, 2, 5, 6, 9 ,10, 13, 14, 17, 18, 21, 22 25, 26, 29, 30, 33, 34, 37, 38, 41, 42
R.101B (50 baud)	46	1-46
R.101B (75 baud)	30	1-15, 17-31
R.101B (100 baud)	22	1-7, 9-23
R.101B (150 baud)	15	1-15
R.101B (200 baud)	10	1-7, 9-11
R.101B (300 baud)	7	1-7

Note: Entering a "47" in the nrf (Bits [05-00]) range for a VFT (TDM) protocol causes all channels to be output simultaneously.

For V.29, V.29 ALT A and V.29 ALT B, it is necessary to select the desired "Demux". The Demux selection defines which 2400 bps subset of these higher rate modem signals is to be applied to the R.101 demultiplex. The Demux selection is made by setting Bits [07, 06] of nrf. For protocols other than V.29, V.29 ALT A, and V.29 ALT B, Bits [07.06] of nrf must be set to 00.

Protocol	Demux	Bits [07, 06]
V.29	A	00
V.29	B	01
V.29	C	10
V.29	D	11
V.29 ALT A	A	00
V.29 ALT A	B	01
V.29 ALT A	C	10
V.29 ALT B	A	00
V.29 ALT B	B	01

Courtesy of http://BlackRadios.terryo.org

Table D-8. Remote Commands for the WJ-954X/FLX Option (Continued)

Command	Response	Description
FDT?	FDT nr1	Request the current selected VFT channel number selected. Response example: FDT 16 Reset value: 1
FDB nrf		Set the current VFT TDM baud rate according to: Rate — nrf 50 baud — 50 75 baud — 75 100 baud — 100 150 baud — 150 200 baud — 200 300 baud — 300
FDB?	FDB nr1	Request the current VFT TDM baud rate. Response example: FDB 75
FDU nrf,nrf, nrf, nrf		Set parameters for a user-defined custom protocol. This command allows building custom parameters settings that can be stored and later invoked as if it were a standard protocol. The first nrf selects the User protocol to be defined. Valid entries are 0-4 for User-defined protocols 1-5. The second nrf selects the type of custom setup as follows: 2nd nrf — Custom Type 0 — FSK 1 — QAM* 2 — OOK * /FLX option only, not available with /FLX-1.

Courtesy of http://BlackRadios.terryo.org

Table D-8. Remote Commands for the WJ-954X/FLX Option (Continued)

Command	Response	Description
FDU (Continued)		The third and fourth nrf arguments are used to enter parameters for the selected type. Refer to **Table L** for FSK custom parameters, to **Table M** for QAM custom parameters, and use **Table N** for OOK custom parameters.

Table L. FDU Bit Mapping for an FSK Type Custom Setup

3rd nrf = Mark and Space frequency definitions (refer to **paragraph D.5.1.4.3.3**)

Bits [09-00] = Carrier Frequency ÷ 5. Range 40-760.
Bits [17-10] = Deviation Frequency ÷ 5. Range 2-244.
Bit [18] = Sense (0 = lower, 1 = upper)

4th nrf = Baud Rate (refer to **paragraph D.5.1.4.3.2**)

Bits [10-00] = Baud Rate in Hz. Range 0-1200.

Table M. FDU Bit Mapping for a QAM Type Custom Setup

3rd nrf = Set the QAM Configuration

Bits [08-00] = Carrier Frequency ÷ 10. Range 0-400.
(Refer to **paragraph D.5.1.4.4.1.**)
Bits [11-09] = Baud rate (refer to **paragraph D.5.1.4.4.2.**)

000 = Reserved
001 = 600 Hz
010 = 1200 Hz
011 = 1600 Hz
100 = 2400 Hz
101 = Reserved
110 = Reserved
111 = Reserved

Courtesy of http://BlackRadios.terryo.org

Table D-8. Remote Commands for the WJ-954X/FLX Option (Continued)

Command	Response	Description

Table M. FDU Bit Mapping for a QAM Type Custom Setup (Continued)

3rd nrf = Set the QAM Configuration (Continued)

Bits [13,12] = Equalizer Length (refer to **paragraph D.5.1.4.4.4**).
- 00 = 24 Taps
- 01 = 48 Taps
- 10 = 96 Taps
- 11 = Off

Bits [17-14] = Constellation (refer to **paragraph D.5.1.4.4.3**).
- 0001 = QPSK
- 0010 = 8PSK
- 0011 = 8QAM
- 0100 = 16QAM
- 0101 = 16QAM(V.29)
- 0110 = 32QAM
- 0111 = 64QAM
- 1000 = 128 QAM
- 1001 = PI/4QPSK
- 1010 = Reserved
- 1011 = Reserved
- 1100 = Reserved
- 1101 = Reserved
- 1110 = Reserved
- 1111 = Reserved

Bits [20-18] = Differential Decoder Alternative (refer to **paragraph D.5.1.4.4.5**).
- 000 = ALT 0
- 001 = ALT 1
- 010 = ALT 2
- 011 = ALT 3
- 100 = ALT 4
- 101 = ALT 5
- 110 = ALT 6
- 111 = Reserved

Bit [21] = Convolutional Decoder (refer to **paragraph D.5.1.4.4.6**).
- 0 = off
- 1 = on

Courtesy of http://BlackRadios.terryo.org

Table D-8. Remote Commands for the WJ-954X/FLX Option (Continued)

Command	Response	Description

Table M. FDU Bit Mapping for a QAM Type Custom Setup (Continued)

3rd nrf = Set the QAM Configuration (Continued)

Bit [22] = Redundant Bit. Setting this bit allows the user to configure a modem that would normally use redundancy for error correction to be operated in a non-error correcting mode. This bit tells the demodulator that the bit normally used for error checking should be discarded.

0 = keep all bits
1 = discard the MSB

4th nrf = Set the Derandomizer Taps. Each of the 24 bits represent one tap in the delay line (refer to **paragraph D.5.1.4.4.7**). The mapping from the bits in the 4th nrf to the corresponding derandomizer taps are as follows:

Bit [23] = Tap 23 (T23)
Bit [22] = Tap 22 (T22)
Bit [21] = Tap 21 (T21)
. .
. .
. .
Bit [01] = Tap 1 (T1)
Bit [00] = Tap 0 (T0)

Table N. FDU Bit Mapping for an OOK Type Custom Setup

3rd nrf = OOK Configuration

Bits [09-00] = Carrier Frequency ÷ 5. Range 40-760. (Refer to **paragraph D.5.1.4.5.2.**)
Bits [20-10] = Baud Rate in Hz. Range 1-1200. (Refer to **paragraph D.5.1.4.5.1.**)

4th nrf = Threshold Level value in dB from -40 to 0. (refer to **paragraph D.5.1.4.5.3**).

Courtesy of http://BlackRadios.terryo.org

Table D-8. Remote Commands for the WJ-954X/FLX Option (Continued)

Command	Response	Description
FDU nrf?	FDU nr1,nr1,nr1	Request the current parameters of the user-defined custom protocol (see Tables L, M, and N). The argument in the command selects the user-defined protocol. Valid entries are 0-4 for user-defined protocols 1-5. The 3 arguments in the response correspond to the 2nd, 3rd and 4th arguments issued in the FDU command as defined above.
FDV?	FDV nr2	Request the current software version installed in the flexible demodulator. Response Example: FDV 1.00 Reset: 0.00

D.6 REFERENCE DESIGNATION PREFIX

The use of partial reference designations are used on the equipment and on the manual illustrations. This partial reference designation consists of the component type letter(s) and the identifying component number. The complete reference designation may be obtained by placing the proper prefix before the partial reference designation. Reference designation prefixes are included on the drawings and illustrations in the figure titles (in parenthesis).

D.7 LIST OF MANUFACTURERS

The manufacturers listed below are supply sources used for obtaining certain parts in this option, and are not listed in the base manual. All other manufacturers not listed below can be found in the base manual.

Mfr. Code	Name and Address	Mfr. Code	Name and Address
61873	Omnetics Connector Corp. 7260 Commerce Circle East Minneapolis, MN 55432	8Z573	JS Terminal Corporation 1380 Brummel Avenue Elk Grove Village, IL 60007

Courtesy of http://BlackRadios.terryo.org

D.8 PARTS LIST

The following parts lists contain all the electrical components used in this option, along with mechanical parts which may be subject to unusual wear or damage. For a comprehensive listing of all parts and a list of manufacturers, refer also to the base manual. When ordering replacement parts from the Watkins-Johnson Company, specify the unit type, the serial number, and the option configuration. Also include the reference designation and the description of each item ordered. The list of manufacturers, provided in **paragraph D.7** and the manufacturer's part number, provided in **paragraph D.9**, are supplied as a guide to aide the user of the equipment while in the field. The parts listed may not necessarily be identical with the parts installed in the unit. The parts listed in **paragraph D.9** will provide for satisfactory unit operation.

Replacement parts may be obtained from any manufacturer provided that the physical characteristics and electrical parameters of the replacement item are compatible with the original part. In the case where components are defined by a military or industrial specification, a vendor which can provide the necessary component is suggested as a convenience to the user.

NOTE

As improvements in semiconductors are made, it is the policy of Watkins-Johnson to incorporate them in proprietary products. As a result, some transistors, diodes and integrated circuits which are installed in the unit may not agree with the parts lists or schematic diagrams of this manual. However, substitution of the semiconductor devices listed in this manual may be substituted with satisfactory results.

Courtesy of http://BlackRadios.terryo.org

D.9 WJ-954X/FLX,/FLX-1 FLEXIBLE DEMODULATOR OPTION

REF DESIG	DESCRIPTION	QTY PER ASSY	MANUFACTURER'S PART NO.	MFR. CODE	RECM VENDOR
	Revision B1				
FLX-A1	WJ-954X/FLX Flexible Demodulator PC Assembly	1	796927-1	14632	
	OR				
FLX-A1	WJ-954XX/FLX-1 Flexible Demodulator PC Assembly	1	796927-4	14632	
FLX-W1	Cable Assembly	1	382650-1	14632	
FLX-W2	Cable Assembly, Flexible Demodulator, External	1	482295-1	14632	
1	Cable Assembly, Jumper	1	282770-1	14632	
2	Program, Software, WJ-954X/FLX	1	841896	14632	
	Options				
1	Cable Assembly, RS-232 to TTL	1	383345-1	14632	

Courtesy of http://BlackRadios.terryo.org

D.9.1 TYPE 796927-1 (/FLX), 796927-4 (/FLX-1) FLEXIBLE DEMODULATOR PC ASSEMBLY

REF DESIG	DESCRIPTION	QTY PER ASSY	MANUFACTURER'S PART NO.	MFR. CODE	RECM VENDOR
	Revision B1				
C1	Capacitor, Ceramic: .033 µF, 10%, 50 V	37	841415-022	14632	
C2	Same as C1				
C3	Same as C1				
C4	Capacitor, Tantalum: 1.0 µF, 20%, 16 V	10	841293-04	14632	
C5	Same as C1				
C6	Same as C1				
C7	Same as C4				
C8 Thru C11	Same as C1				
C12	Capacitor, Ceramic: 47 pF, 5%, 50 V	4	N2-63057	14632	
C13 Thru C15	Same as C4				
C16	Same as C1				
C17	Same as C1				
C18	Same as C12				
C19 Thru C21	Same as C1				
C22	Capacitor, Ceramic: .1 µF, 10%, 50 VDC	3	841250-25	14632	
C23	Same as C1				
C24	Capacitor, Ceramic: 22 pF, 5%, 50 V	1	841415-003	14632	
C25	Same as C1				
C26	Same as C1				
C27 Thru C30	Same as C4				
C31	Same as C22				
C32 Thru C38	Same as C1				
C39	Same as C22				
C40 Thru C42	Same as C1				
C43	Same as C4				
C44	Capacitor, Ceramic: 470 pF, 5%, 50 V	2	841415-011	14632	
C45	Capacitor, Tantalum: 6.8 µF, 20%, 6.3 V	2	841293-14	14632	
C46	Same as C44				
C47	Same as C1				
C48	Same as C12				
C49 Thru C54	Same as C1				

Courtesy of http://BlackRadios.terryo.org

REF DESIG	DESCRIPTION	QTY PER ASSY	MANUFACTURER'S PART NO.	MFR. CODE	RECM VENDOR
C55	Same as C45				
C56	Same as C1				
C57	Same as C1				
C58	Same as C12				
C59	Same as C1				
J1	Connector, Microminiature Pin, 18 Pin	1	PS2-18-CB-A1217	61873	
J2	Connector, Header, PC MT	1	68705-103	22526	
J3	Connector, Header, PC MT	4	68705-102	22526	
J4	Same as J3				
J5	Same as J3				
P3	Connector, Plug, 11 Pin	1	11PS-JE	8Z573	
R1	Resistor, Fixed: 1.0 kΩ, 5%, .1 W	6	841414-073	14632	
R2	Resistor, Fixed: 10 kΩ, 5%, .1 W	2	841414-097	14632	
R3	Resistor, Fixed: 100 kΩ, 5%, .1 W	41	841414-121	14632	
R4 Thru R17	Same as R3				
R18	Same as R2				
R19 Thru R21	Same as R1				
R22	Same as R3				
R23	Same as R3				
R24	Resistor, Fixed: 680 kΩ, 5%, .1 W	1	841414-141	14632	
R25	Same as R3				
R26	Same as R3				
R27	Same as R1				
R28	Same as R3				
R29	Same as R3				
R30	Not Used				
R31	Not Used				
R32	Same as R3				
R33	Resistor, Fixed: 1.0 MΩ, 5%, .1 W	5	841414-145	14632	
R34	Same as R33				
R35 Thru R43	Same as R3				
R44	Not Used				
R45	Same as R3				
R46	Same as R33				
R47	Same as R33				
R48	Not Used				
R49	Same as R3				

Courtesy of http://BlackRadios.terryo.org

REF DESIG	DESCRIPTION	QTY PER ASSY	MANUFACTURER'S PART NO.	MFR. CODE	RECM VENDOR
R50	Not Used				
R51	Not Used				
R52 Thru R56	Same as R3				
R57	Resistor, Fixed: 68 kΩ, 5%, .1 W	1	841414-117	14632	
R58	Resistor, Fixed: 470 kΩ, 5%, .1 W	1	841414-137	14632	
R59	Resistor, Fixed: 82 kΩ, 5%, .1 W	1	841414-119	14632	
R60	Same as R33				
R61	Not Used				
R62	Same as R3				
R63	Same as R1				
R64	Resistor, Fixed: 1.5 kΩ, 5%, .1 W	1	841414-077	14632	
R65	Same as R3				
R66	Same as R3				
TP1	Connector, Terminal, PC MT	2	929805-01-07-15	67129	
TP2	Same as TP1				
TP3	Same as J3				
U1	Integrated Circuit, Line Driver and Receiver Monolithic	1	SN75155D	01295	
U2	Integrated Circuit, Analog Switch	2	DG413DY	17856	
U3	Same as U2				
U4	Integrated Circuit, CMOS, Dual 4-Bit Binary Ripple Counter	1	74HC393 SO14	34371	
U5	Integrated Circuit, SRAM: 8K X 8 SRAM CMOS	3	MT5C6408DJ-25	6Y440	
U6	Same as U5				
U7	Integrated Circuit, Digital Signal Processor, 27 MHz	1	XSP56001FE27	04713	
U8	Amplifier, Dual OP AMP	2	MC34002D	04713	
U9	Integrated Circuit, 16-Bit Audio D/A Converter	2	AD1856R	24355	
U10	Same as U8				
U11	Integrated Circuit, Quad D-Type Flip-Flop	2	74HC173 SO16	04713	
U12	Integrated Circuit, 32 kΩ, CMOS Dual Port RAM	1	IDT7143L55J	61772	
U13	Same as U5				
U14	Same as U11				
U15	Integrated Circuit, SRAM 32K X 8 SRAM	3	MT5C2568DJ-25	6Y440	
U16	Same as U15				
U17	Same as U15				
U18	Same as U9				
U19	Integrated Circuit, Switched Capacitor Filter	1	XR-1016D	52063	
U20	Integrated Circuit, EPROM, Programmed, 9548/FLX	1	841741	14632	
	OR				
U20	Integrated Circuit, EPROM, Programmed, 9548/FLX-1	1	841843	14632	
U21	Integrated Circuit, Dual 1 of 4 Decoder/Demultiplexer	2	74AC139 SO16	34371	
U22	Integrated Circuit, Dual 4-Input NAND Gate	1	74HC20 SO14	02735	
U23	Integrated Circuit, Dual D Flip-Flop	2	74HC74 SO14	04713	
U24	Integrated Circuit, Hex Buffer/Line Driver	1	74HC365 SO16	07029	

Courtesy of http://BlackRadios.terryo.org

REF DESIG	DESCRIPTION	QTY PER ASSY	MANUFACTURER'S PART NO.	MFR. CODE	RECM VENDOR
U25	Same as U23				
U26	Integrated Circuit, Quad Buffer, Line Driver	1	74HC125 SO14	34371	
U27	Integrated Circuit, Quad 2-Input AND Gate	1	74HC08 SO14	02735	
U28	Integrated Circuit, 8 Bit Magnitude Comparator	1	74HC688 SOL20	02735	
U29	Same as U21				
U30	Integrated Circuit, CMOS Hex Inverter	1	74HC14 SO14	02735	
XU20	Socket, Integrated Circuit, 16 Pos., Single Row	1	SL-116-G-11	55322	
Y1	Oscillator, Quartz Crystal: 25.8048 MHz	1	FPX-SM-25.8048 MHz	61429	

Courtesy of http://BlackRadios.terryo.org

THIS PAGE INTENTIONALLY LEFT BLANK

Courtesy of http://BlackRadios.terryo.org

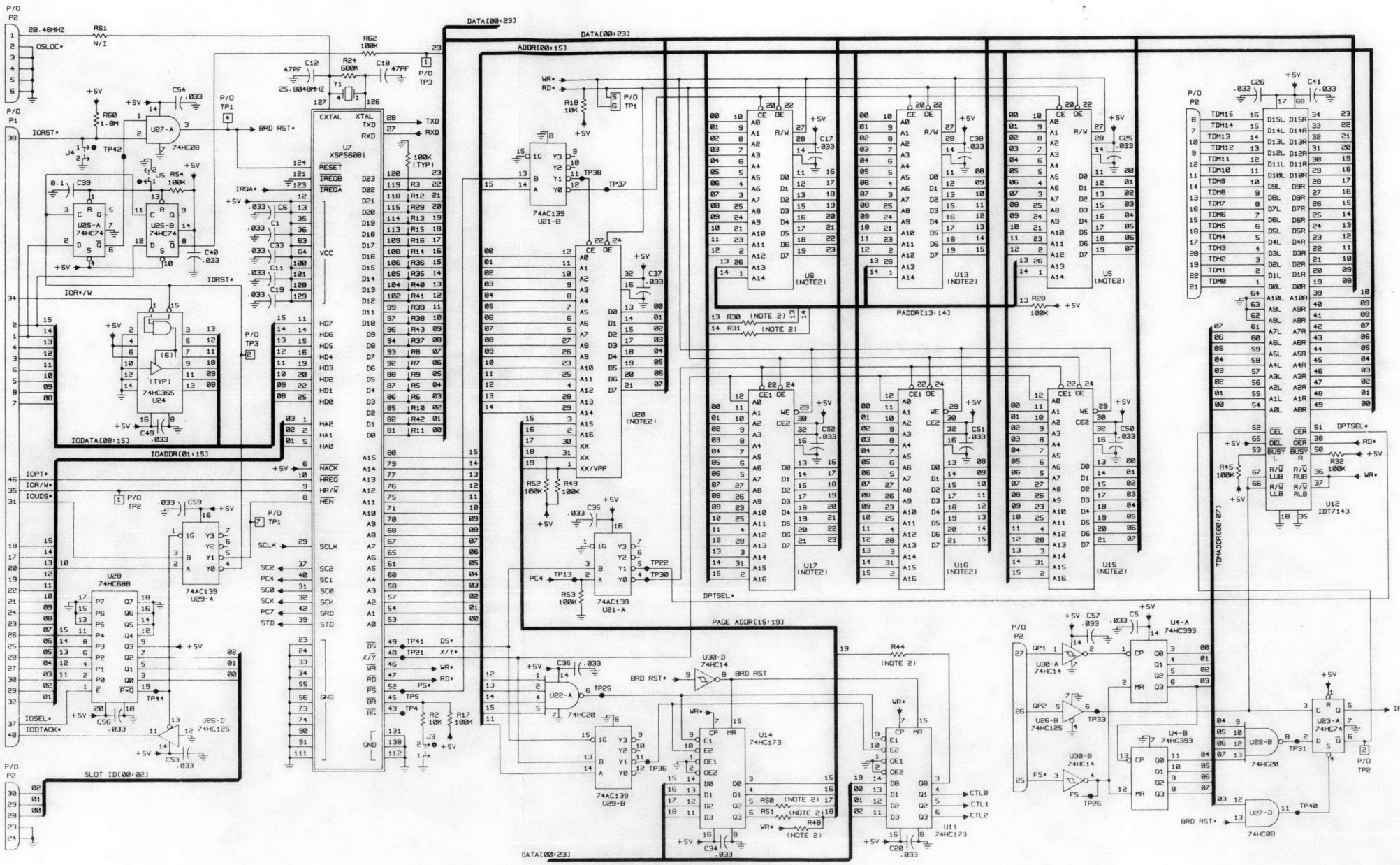

Figure D-26. Type 796927-1, Flex Demod/Activity Monitor Assembly Schematic Diagram 581142 (Sheet 1 of 2) (B)

Courtesy of http://BlackRadios.terryo.org

TES:

1. SWITCHES ARE SHOWN WITH A LOGIC '1' CONTROL INPUT.
2. IT IS POSSIBLE TO USE VARIOUS DENSITY MEMORY CHIPS FOR U5,U6,U13,U15, U16,U17,& U28. THE FOLLOWING LISTS EACH ASSY DASH NO.(TYPE), IT'S MEMORY CONFIGURATION, PART NO. AND WHICH 0-OHM RESISTORS MUST BE INSTALLED.

FUNCTION	TYPE	U28(EPROM)			U5,6,13(SRAM)**		U15,16,17(SRAM)***		0-OHM JUMPERS*					
		SCD NO.	PART NO.	ORG.	PART NO.	ORG.	PART NO.	ORG.	R30	R31	R44	R48	R58	R51
FLEXIBLE DEMOD	796927-1	841741	27C010	128K X 8	MT5C6408	8K X 8	MT5C2568	32K X 8	N	N	N	N	N	N
ACTIVITY MONITOR, LEVEL 1	796927-2	841793	27C010	128K X 8	MT5C6408	8K X 8	MT5C2568	32K X 8	N	N	N	N	N	N
ACTIVITY MONITOR, LEVEL 2	796927-3	841794	27C010	128K X 8	MT5C6408	8K X 8	MT5C2568	32K X 8	N	N	N	N	N	N

* I- 0-OHM JUMPER INSTALLED. N= NOT INSTALLED

** A 28-PIN 32K X 8 SRAM IS SHOWN ON THE SCHEMATIC. WHEN A 28-PIN 8K X 8 SRAM IS INSTALLED. PIN 26 IS CE2 (VS.A13) AND PIN1 IS NC (VS.A14)

*** A 32-PIN 128K X 8 SRAM IS SHOWN ON THE SCHEMATIC. WHEN A 28-PIN 32K X 8 SRAM IS INSTALLED. PINS 1 THRU 28 CORRESPOND TO PINS 3 THRU 30 ON THE 32-PIN DEVICE.

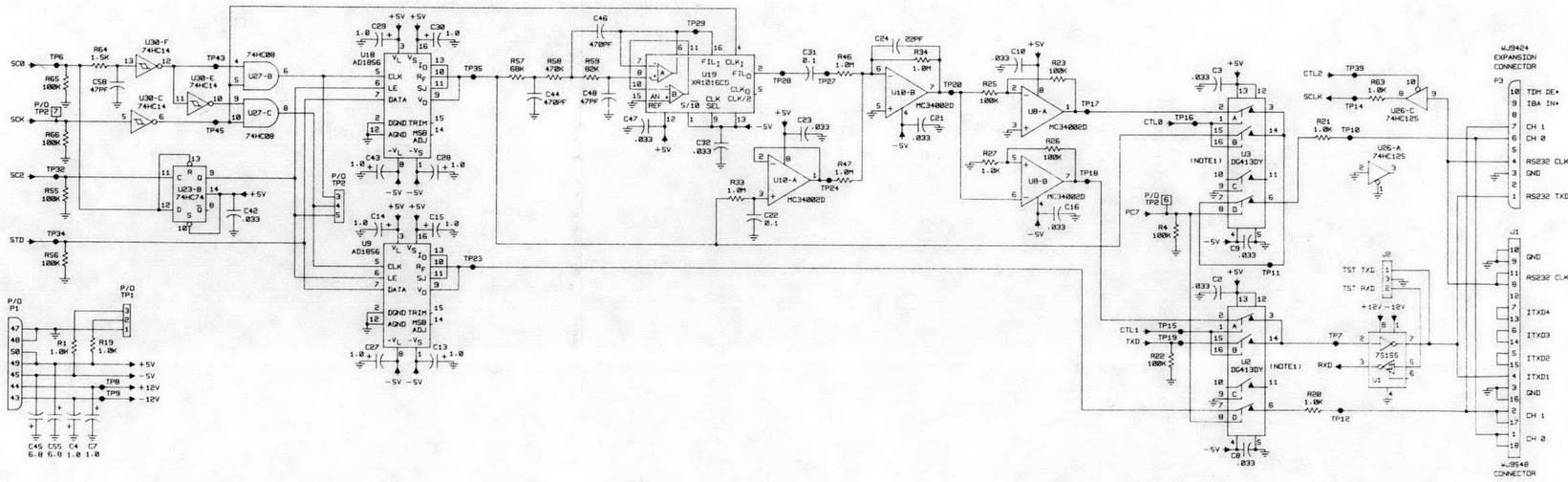

Figure D-26. Type 796927-1, Flex Demod/Activity Monitor Assembly Schematic Diagram 581142 (Sheet 2 of 2) (B)

Courtesy of http://BlackRadios.terryo.org

APPENDIX E

WJ-954X/ACT2 ACTIVITY MONITOR OPTION

NOTE

This Appendix describes all WJ-954X/ACT2 options through software version 2.01. All operational differences that exist between software versions 1.XX and 2.01 are clearly identified herein. The primary difference is that version 1.XX is implemented on PC assembly 796845-2 while version 2.01 is implemented on PC assembly 796927-3. For completeness, parts lists and schematics for both PC assemblies are included in this document. Refer to **Table 1-2** in the WJ-954X Instruction Manual for additional software compatibility information.

Copyright © Watkins-Johnson Company 1992
All Rights Reserved

WATKINS-JOHNSON COMPANY
700 QUINCE ORCHARD ROAD
GAITHERSBURG, MARYLAND 20878-1794

November 1994

Courtesy of http://BlackRadios.terryo.org

WARNING

This equipment utilizes voltages which are potentially dangerous and may be fatal if contacted. Exercise extreme caution when working with the equipment with any protective cover removed.

PROPRIETARY STATEMENT

This document and subject matter disclosed herein are proprietary items to which Watkins-Johnson Company retains the exclusive right of dissemination, reproduction, manufacture and sale.

This document is provided to the individual or using organization for their use alone in the direct support of the associated equipment unless permission for further disclosure is expressly granted in writing.

Courtesy of http://BlackRadios.terryo.org

TABLE OF CONTENTS

APPENDIX E

Paragraph		Page
E.1	Description	E-1
E.2	Operation	E-1
E.2.1	Local Operation	E-1
E.2.1.1	Selecting the WJ-954X/ACT2 Option for Local Control	E-1
E.2.2	Remote Operations	E-3
E.2.2.1	Selecting the WJ-954X/ACT2 Option for Remote Control	E-4
E.2.2.2	Selecting Demodulators for Activity Monitor Channels	E-4
E.2.2.3	Requesting the Activity Type of an Activity Monitor Channel	E-5
E.3	Reference Designation Prefix	E-5
E.4	List of Manufacturers	E-5
E.5	Parts List	E-5
E.6	Type WJ-954X/ACT2 Activity Monitor Option (Level 2)	E-7
E.6.1	Type 796845-2 Activity Monitor PC Assembly (Ver 1.XX)	E-8
E.6.2	Type 796927-3 Flex Demod/Activity Monitor PC Assembly (Ver 2.01)	E-10

LIST OF TABLES

Table		Page
E-1	Remote Commands for the WJ-954X/ACT2 Option	E-3

LIST OF ILLUSTRATIONS

Figure		Page
E-1	Main Menu Display	E-1
E-2	Selecting the WJ-954X/ACT2 Option for Control	E-2
E-3	Activity Monitor Display	E-2
E-4	Selecting a Demodulator for an Activity Monitor Channel	E-3
E-5	Type 796845-2 Activity Monitor Schematic Diagram 580985 (Ver 1.01)	E-15
E-6	Type 796927-3 Flex Demod/Activity Monitor Schematic Diagram 581142 (Ver 2.01)	E-17

Courtesy of http://BlackRadios.terryo.org

APPENDIX E

WJ-954X/ACT2 ACTIVITY MONITOR OPTION

Courtesy of http://BlackRadios.terryo.org

APPENDIX E

WJ-954X/ACT2 ACTIVITY MONITOR OPTION

E.1 DESCRIPTION

The WJ-954X/ACT2 Activity Monitor option provides a signal classification capability for the WJ-9548 Digital FDM Demultiplexer, the WJ-9543 Channel-Group Demultiplexer, and other members of the WJ-954X-series. Voice grade signals can be categorized as voice, signaling tones, phase-shift keyed (PSK) data, frequency-shift keyed (FSK) data, or no activity.

The output of twelve selected demodulators are simultaneously monitored for signal classification, which can then be monitored by a local operator via the Demultiplexer's front panel display or remotely via the status register and a IEEE-488 Interface.

The WJ-954X/ACT2 option consists of an Activity Monitor PC Assembly (WJ P/N 796845-2 for software version 1.XX or WJ P/N 796927-3 for software version 2.01) which plugs into one of the vacant option slots in the Demultiplexer's chassis.

E.2 OPERATION

The outputs of twelve demodulators can be selected at one time for signal classification. The demodulator outputs can be selected locally via the Demultiplexer's front panel or remotely via an IEEE-488 Interface bus. See **paragraph E.2.1** for Local operations and **paragraph E.2.2** for Remote operations.

E.2.1 LOCAL OPERATION

E.2.1.1 Selecting the WJ-954X/ACT2 Option for Local Control

Before a demodulator output can be selected for signal classification, the Activity Monitor option must first be selected for configuration changes. To select the WJ-954X/ACT2 option, first select the OPTION CONFIGURATION menu item in the Main Menu (see **Figure E-1**) by moving the cursor to it and pressing the cursor knob or ENTER key.

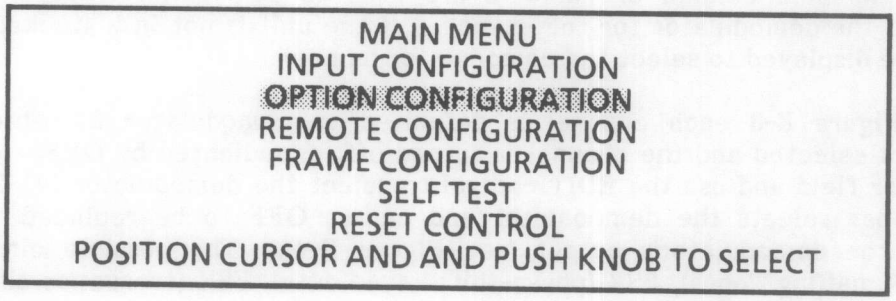

Figure E-1. Main Menu Display

Courtesy of http://BlackRadios.terryo.org

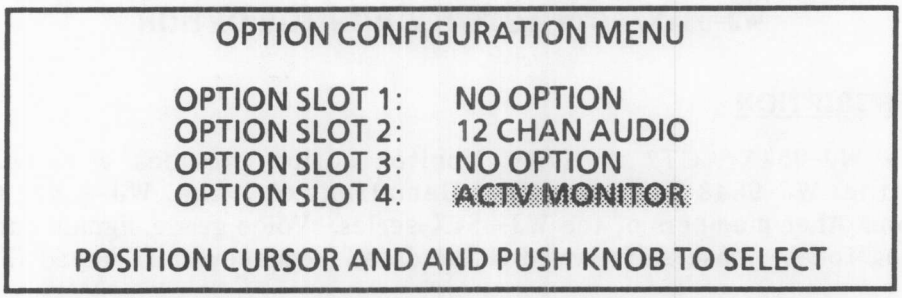

Figure E-2. Selecting the WJ-954X/ACT2 Option for Control

The Option Configuration Menu is displayed showing the Activity Monitor option and its option slot location in the Demultiplexer (see **Figure E-2**). Move the cursor to the ACTV MONITOR menu item and push the CURSOR knob or ENTER key to select the option and to display the Activity Monitor display (**Figure E-3**).

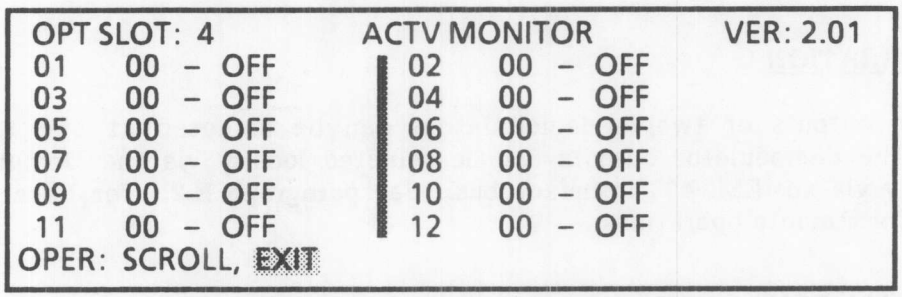

Figure E-3. Activity Monitor Display

The OPT SLOT field in the upper left of the display indicates the option slot number into which the selected Activity Monitor PC assembly is installed. The VER field in the upper right of the display indicates the software version of the installed Activity Monitor option. For versions below 2.00, the VER field is not displayed.

The left-hand column of numbers on the display indicates the activity monitor channel. The right-hand column of numbers are used to select the frame (if in a stacked configuration) and the demodulator for the channel. If the unit is not in a stacked configuration, only two digits are displayed to select the demodulator number.

In **Figure E-3** each channel is defaulted to demodulator 00 which indicates a demodulator is not selected and the channel is turned off, as indicated by OFF. Move the cursor to the demodulator field and use the EDIT control to select the demodulator (01-24). Entering a demodulator number selects the demodulator and causes OFF to be replaced with the signal classification of the demodulator's output (see **Figure E-4**). The possible classifications are VOICE, TONES (Signalling Tones), PSK (phase-shift keyed data), FSK (frequency-shift keyed data), and NO ACTV (no signal activity).

Once the demodulator selections for activity monitor channels are made, move the cursor to the EXIT field and push the CURSOR control to return the display to the Option Configuration Menu.

Courtesy of http://BlackRadios.terryo.org

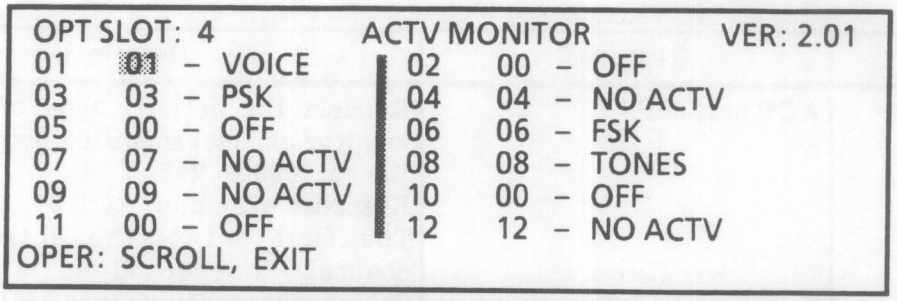

Figure E-4. Selecting a Demodulator for an Activity Monitor Channel

E.2.2 REMOTE OPERATIONS

Table E-1 lists the commands and queries used for remote control of the WJ-954X/ACT2 option. Command arguments are accepted as forgiving numeric representation (nrf); response formats are provided as numeric response integers (nr1). See **paragraph 2.6.2** in the WJ-954X Instruction Manual for further details on numeric data representation.

Table E-1. Remote Commands for the WJ-954X/ACT2 Option

Command	Response	Description
OPS nrf		Select the option slot number for configuration changes. See **paragraph E.2.2.1.** Range: 1 to 4
OPS?	OPS nr1	Request the current selected option slot number. Response example: OPS 2 Reset value: 1
ASG nrf,nrf,nrf		Set the channel number (first argument), the frame number (second argument), and the demodulator number (third argument). The selected or specified demodulator within the selected or specified frame provides the output to the selected or specified activity monitor channel. Channel range: 1 to 12 Frame range: 0 to 8 Demodulator range: 0 to 24 (0 turns off the audio channel)
ASG nrf?	ASG nr1,nr1,nr1	Request the frame (second response) and the demodulator (third response) for the audio channel specified by nrf (first response). Response example: ASG 12,0,02

Courtesy of http://BlackRadios.terryo.org

Table E-1. Remote Commands for the WJ-954X/ACT2 Option (Continued)

Command	Response	Description
ACT nrf?	ACT nr1, nr1	Request the activity type of the activity monitor channel specified by nrf. Range: 000 to 255 Response example: ACT 01, 001 The first nr1 is the activity monitor channel. The second nr1 is a bit mapped value representing the activity type as follows: Bit — Description 0 — Voice type of activity 1 — Not Used 2 — Signalling tones activity 3 — Frequency-shift keyed data 4 — Phase-shift keyed data 5-15 — Not Used A returned value of zero (no bits set) indicates No Activity on the demodulator output being monitored.

E.2.2.1 **Selecting the WJ-954X/ACT2 Option for Remote Control**

Before demodulator outputs can be selected for signal classification, the Activity Monitor option must first be selected for configuration changes. The OPS command and argument is used to select the option slots 1, 2, 3, or 4. This command must always precede, on the same program line, any /ACT2 option command intended for slots 2, 3, or 4. If a slot number is not specified on the program line, the Demultiplexer directs the command to the option in slot 1. Each remote command on the program line should be delimited with a semicolon. Before selecting the option, it can first be determined in which of the four option slots the Flexible Demodulator option is located (*OPT?). Then send the OPS command with an argument of 1, 2, 3, or 4 (as determined by option slot location) followed by a semicolon and the rest of the program line. Subsequent to processing a command line, the Demultiplexer would return to its control of slot 1. See the main manual for more information on the *OPT? query.

E.2.2.2 **Selecting Demodulators for Activity Monitor Channels**

The ASG command and three arguments are used to select a demodulator to provide the output for one of the twelve activity monitor channels. The first argument is used to select the channel from 1 to 12. The second argument is used to select the frame number for which the demodulator is located. If the unit is in a stacked configuration, the argument can be any number from 1 to 8. If the unit is a stand-alone, 0 is to be entered for the frame number. The third argument is used to select the demodulator number, from 1 to 24. An activity monitor channel can be turned off by sending 00 in the demodulator argument.

The ASG nrf? query can be used to determine the currently selected demodulator for an activity monitor channel (nrf is the channel number from 1 to 12). The response to this query consists of three arguments. The first argument is the channel number requested, the second is the frame number (0-8) where the demodulator is located, and the third argument is the demodulator number (00 to 24).

Courtesy of http://BlackRadios.terryo.org

The signal classification for the output of a demodulator can be requested by reading the contents of the WJ-9548's Activity Summary Register. Refer to **paragraph 2.6.9.3** in the WJ-954X Instruction Manual for details on reading the contents of this register.

E.2.2.3 Requesting the Activity Type of an Activity Monitor Channel

The Current activity type contained in an activity monitor channel is requested with the ACT nrf? query, where nrf is the activity monitor channel number. When the ACT nrf? query is sent, the unit responds with the activity monitor channel number and the type of activity. Activity type response is a bit mapped value of sixteen bits, as listed in **Table E-1** for the ACT nrf? query.

E.3 REFERENCE DESIGNATION PREFIX

The use of partial reference designations are used on the equipment and on the manual illustrations. This partial reference designation consists of the component type letter(s) and the identifying component number. The complete reference designation may be obtained by placing the proper prefix before the partial reference designation. Reference designation prefixes are included on the drawings and illustrations in the figure titles (in parenthesis).

E.4 LIST OF MANUFACTURERS

The manufacturers listed below are supply sources used for obtaining certain parts in this option, and are not listed in the base manual. All other manufacturers not listed below can be found in the base manual.

Mfr. Code	Name and Address	Mfr. Code	Name and Address
61873	Omnetics Connector Corp. 7260 Commerce Circle East Minneapolis, MN 55432	8Z573	JS Terminal Corporation 1380 Brummel Avenue Elk Grove Village, IL 60007

E.5 PARTS LIST

The following parts lists contain all the electrical components used in this option, along with mechanical parts which may be subject to unusual wear or damage. For a comprehensive listing of all parts and a list of manufacturers, refer also to the base manual. When ordering replacement parts from the Watkins-Johnson Company, specify the unit type, the serial number, software release number, the option configuration, and any applicable option software version numbers. Also include the reference designation and the description of each item ordered. The list of manufacturers, provided in **paragraph E.4** and the base manual, and the manufacturer's part number, provided in **paragraph E.6**, are supplied as a guide to aid the user of the equipment while in the field. The parts listed may not necessarily be identical with the parts installed in the unit. The parts listed in **paragraph E.6** will provide for satisfactory unit operation.

Courtesy of http://BlackRadios.terryo.org

Replacement parts may be obtained from any manufacturer provided that the physical characteristics and electrical parameters of the replacement item are compatible with the original part. In the case where components are defined by a military or industrial specification, a vendor which can provide the necessary component is suggested as a convenience to the user.

Parts lists and schematics are provided in the following pages for two distinct printed circuit assemblies: type 796845-2 and type 796927-3. Either of the two is required to provide the Activity Monitor function. Type 796845-2 is used for Activity Monitor software version 1.XX while type 796927-3 is used for version 2.01.

NOTE

As improvements in semiconductors are made, it is the policy of Watkins-Johnson to incorporate them in proprietary products. As a result, some transistors, diodes and integrated circuits which are installed in the unit may not agree with the parts list or schematic diagrams in this manual. However, substitution of the semiconductor devices listed in this manual may be substituted with satisfactory results.

Courtesy of http://BlackRadios.terryo.org

E.6 TYPE WJ-954X/ACT2 ACTIVITY MONITOR OPTION (LEVEL 2)

REF DESIG	DESCRIPTION	QTY PER ASSY	MANUFACTURER'S PART NO.	MFR. CODE	RECM VENDOR
	Revision A				
A1	Activity Monitor PC Assembly	1	796845-2 (VER 1.XX)	14632	
	or				
A1	Activity Monitor PC Assembly	1	796927-3 (VER 2.01)	14632	

Courtesy of http://BlackRadios.terryo.org

E.6.1 TYPE 796845-2 ACTIVITY MONITOR PC ASSEMBLY (VER 1.XX)

REF DESIG	DESCRIPTION	QTY PER ASSY	MANUFACTURER'S PART NO.	MFR. CODE	RECM VENDOR
	Revision A				
C1	Capacitor, Ceramic: .033 µF, 10%, 50 V	28	841415-022	14632	
C2 Thru C18	Same as C1				
C19	Capacitor, Tantalum: 2.2 µF, 20%, 20 V	2	841293-09	14632	
C20	Same as C1				
C21	Same as C19				
C22	Same as C1				
C23	Capacitor, Tantalum: 6.8 µF, 20%, 6.3 V	1	841293-14	14632	
C24 Thru C30	Same as C1				
C31	Not Used				
C32	Not Used				
C33	Same as C1				
J1	Connector, Receptacle 3 Pin	1	68016-103	22526	
R1	Resistor, Fixed: 100 kΩ, 5%, .1 W	29	841414-121	14632	
R2 Thru R26	Same as R1				
R27	Not Used				
R28	Resistor, Fixed: 22Ω, 5%, .1 W	1	841414-033	14632	
R29	Resistor, Fixed: 1.0 kΩ, 5%, .1 W	1	841414-073	14632	
R30	Resistor, Fixed: 10 kΩ, 5%, 1/10 W	1	841414-097	14632	
R31	Same as R1				
R32	Same as R1				
TP1	Connector, Terminal, 10 Position	1	929805-01-10-15	53387	
TP2	Connector, Terminal, 7 Position	2	929805-01-07-15	67129	
TP3	Same as TP2				
U1	Integrated Circuit, Dual D-Type Flip-Flop	2	74HC74 SO14	04713	
U2	Same as U1				
U3	Integrated Circuit, SRAM	3	MT5C2568DJ-35	6Y440	
U4	Integrated Circuit, EPROM, Programmed	1	841584	14632	
U5	Integrated Circuit, Line Driver	1	SN75155D	01295	
U6	Integrated Circuit, Quad 2-Input OR	1	74HC32 SO14	02735	
U7	Integrated Circuit, Quad Buffer/Line Driver	1	74HC125 SO14	34371	
U8	Integrated Circuit, Quad Buffer/Line Driver	1	841683	14632	
U9	Integrated Circuit, Hex Inverter	1	74AC04 SO14	04713	
U10	Same as U3				
U11	Integrated Circuit, Quad 2-Input AND	1	74AC08 S014	04713	
U12	Integrated Circuit, Quad 2-Input OR	1	74AC32 S014	34371	
U13	Same as U3				

Courtesy of http://BlackRadios.terryo.org

REF DESIG	DESCRIPTION	QTY PER ASSY	MANUFACTURER'S PART NO.	MFR. CODE	RECM VENDOR
U14	Integrated Circuit, RAM	1	IDT7143L70J	61772	
U15	Integrated Circuit, Digital Signal Processor	1	XSP56001ZL20	04713	
U16	Integrated Circuit, Hex Buffer	1	74HC365 S016	02735	
U17	Integrated Circuit, Magnitude Comparator	1	74HC85 S016	02735	
U18	Integrated Circuit, Binary Counter	1	74HC590 S016	01295	
U19	Integrated Circuit, 8-Input NAND	1	74HC30 S014	02735	
XU4	Socket, Receptacle PC MT	2	SL-114-G-11	55342	
XU15	Socket, DSP	1	LCC-100P-DSPLL-TG	04713	

Courtesy of http://BlackRadios.terryo.org

E.6.2 TYPE 796927-3 ACTIVITY MONITOR PC ASSEMBLY (VER 2.01)

REF DESIG	DESCRIPTION	QTY PER ASSY	MANUFACTURER'S PART NO.	MFR. CODE	RECM VENDOR
	Revision A				
C1	Capacitor, Ceramic: .033 µF, 10%, 50 V	37	841415-022	14632	
C2	Same as C1				
C3	Same as C1				
C4	Capacitor, Tantalum: 1.0 µF, 20%, 16 V	10	841293-04	14632	
C5	Same as C1				
C6	Same as C1				
C7	Same as C4				
C8 Thru C11	Same as C1				
C12	Capacitor, Ceramic: 47 pF, 5%, 50 V	4	N2-63057	14632	
C13 Thru C15	Same as C4				
C16	Same as C1				
C17	Same as C1				
C18	Same as C12				
C19 Thru C21	Same as C1				
C22	Capacitor, Ceramic: .1 µF, 10%, 50 VDC	3	841250-25	14632	
C23	Same as C1				
C24	Capacitor, Ceramic: 22 pF, 5%, 50 V	1	841415-003	14632	
C25	Same as C1				
C26	Same as C1				
C27 Thru C30	Same as C4				
C31	Same as C22				
C32 Thru C38	Same as C1				
C39	Same as C22				
C40 Thru C42	Same as C1				
C43	Same as C4				
C44	Capacitor, Ceramic: 470 pF, 5%, 50 V	2	841415-011	14632	
C45	Capacitor, Tantalum: 6.8 µF, 20%, 6.3 V	2	841293-14	14632	
C46	Same as C44				
C47	Same as C1				
C48	Same as C12				
C49 Thru C54	Same as C1				

Courtesy of http://BlackRadios.terryo.org

REF DESIG	DESCRIPTION	QTY PER ASSY	MANUFACTURER'S PART NO.	MFR. CODE	RECM VENDOR
C55	Same as C45				
C56	Same as C1				
C57	Same as C1				
C58	Same as C12				
C59	Same as C1				
J1	Connector, Microminiature Pin, 18 Pin	1	PS2-18-CB-A1217	61873	
J2	Connector, Header, PC MT	1	68705-103	22526	
J3	Connector, Header, PC MT	4	68705-102	22526	
J4	Same as J3				
J5	Same as J3				
P3	Connector, Plug, 11 Pin	1	11PS-JE	8Z573	
R1	Resistor, Fixed: 1.0 kΩ, 5%, .1 W	6	841414-073	14632	
R2	Resistor, Fixed: 10 kΩ, 5%, .1 W	2	841414-097	14632	
R3	Resistor, Fixed: 100 kΩ, 5%, .1 W	41	841414-121	14632	
R4 Thru R17	Same as R3				
R18	Same as R2				
R19 Thru R21	Same as R1				
R22	Same as R3				
R23	Same as R3				
R24	Resistor, Fixed: 680 kΩ, 5%, .1 W	1	841414-141	14632	
R25	Same as R3				
R26	Same as R3				
R27	Same as R1				
R28	Same as R3				
R29	Same as R3				
R30	Not Used				
R31	Not Used				
R32	Same as R3				
R33	Resistor, Fixed: 1.0 MΩ, 5%, .1 W	5	841414-145	14632	
R34	Same as R33				
R35 Thru R43	Same as R3				
R44	Not Used				
R45	Same as R3				
R46	Same as R33				
R47	Same as R33				
R48	Not Used				
R49	Same as R3				

Courtesy of http://BlackRadios.terryo.org

REF DESIG	DESCRIPTION	QTY PER ASSY	MANUFACTURER'S PART NO.	MFR. CODE	RECM VENDOR
R50	Not Used				
R51	Not Used				
R52 Thru R56	Same as R3				
R57	Resistor, Fixed: 68 kΩ, 5%, .1 W	1	841414-117	14632	
R58	Resistor, Fixed: 470 kΩ, 5%, .1 W	1	841414-137	14632	
R59	Resistor, Fixed: 82 kΩ, 5%, .1 W	1	841414-119	14632	
R60	Same as R33				
R61	Not Used				
R62	Same as R3				
R63	Same as R1				
R64	Resistor, Fixed: 1.5 kΩ, 5%, .1 W	1	841414-077	14632	
R65	Same as R3				
R66	Same as R3				
TP1	Connector, Terminal, PC MT	2	929805-01-07-15	67129	
TP2	Same as TP1				
TP3	Same as J3				
U1	Integrated Circuit, Line Driver and Receiver Monolithic	1	SN75155D	01295	
U2	Integrated Circuit, Analog Switch	2	DG413DY	17856	
U3	Same as U2				
U4	Integrated Circuit CMOS, Dual 4-Bit Binary Ripple Counter	1	74HC393 SO14	34371	
U5	Integrated Circuit, SRAM: 8K X 8 SRAM CMOS	3	MT5C6408DJ-25	6Y440	
U6	Same as U5				
U7	Integrated Circuit, Digital Signal Processor, 27 MHz	1	XSP56001FE27	04713	
U8	Amplifier, Dual OP AMP	2	MC34002D	04713	
U9	Integrated Circuit, 16-Bit Audio D/A Converter	2	AD1856R	24355	
U10	Same as U8				
U11	Integrated Circuit, Quad D-Type Flip-Flop	2	74HC173 SO16	04713	
U12	Integrated Circuit, 32 kΩ, CMOS Dual Port RAM	1	IDT7143L55J	61772	
U13	Same as U5				
U14	Same as U11				
U15	Integrated Circuit, SRAM 32K X 8 SRAM	3	MT5C2568DJ-25	6Y440	
U16	Same as U15				
U17	Same as U15				
U18	Same as U9				
U19	Integrated Circuit, Switched Capacitor Filter	1	XR-1016D	52063	
U20	Integrated Circuit, EPROM, Programmed	1	841794	14632	
U21	Integrated Circuit, Dual 1 of 4 Decoder/Demultiplexer	2	74AC139 SO16	34371	
U22	Integrated Circuit, Dual 4-Input NAND Gate	1	74HC20 SO14	02735	
U23	Integrated Circuit, Dual D Flip-Flop	2	74HC74 SO14	04713	
U24	Integrated Circuit, Hex Buffer/Line Driver	1	74HC365 SO16	07029	

Courtesy of http://BlackRadios.terryo.org

REF DESIG	DESCRIPTION	QTY PER ASSY	MANUFACTURER'S PART NO.	MFR. CODE	RECM VENDOR
U25	Same as U23				
U26	Integrated Circuit, Quad Buffer, Line Driver	1	74HC125 SO14	34371	
U27	Integrated Circuit, Quad 2-Input AND Gate	1	74HC08 SO14	02735	
U28	Integrated Circuit, 8 Bit Magnitude Comparator	1	74HC688 SOL20	02735	
U29	Same as U21				
U30	Integrated Circuit, CMOS Hex Inverter	1	74HC14 SO14	02735	
XU20	Socket, IC, 16 Pos., Single Row	1	SL-116-G-11	55322	
Y1	Oscillator, Quartz Crystal: 25.8048 MHz	1	FPX-SM-25.8048 MHz	61429	

Courtesy of http://BlackRadios.terryo.org

NOTES:
1. UNLESS OTHERWISE SPECIFIED:
   A) RESISTANCE IS IN OHMS, ±5%, 1/8W.
   B) CAPACITANCE IS IN μF.
2. * DENOTES COMPONENTS NOT USED.
3. REFER TO TABLE 1 FOR EPROM SCD NUMBER ASSOCIATED WITH U4.

TYPE	EPROM SCD
796845-1	841529
796845-2	841584

Figure E-5. Type 796845-2, Activity Monitor Assembly Schematic Diagram 580985 (Ver 1.XX) (A)

Courtesy of http://BlackRadios.terryo.org

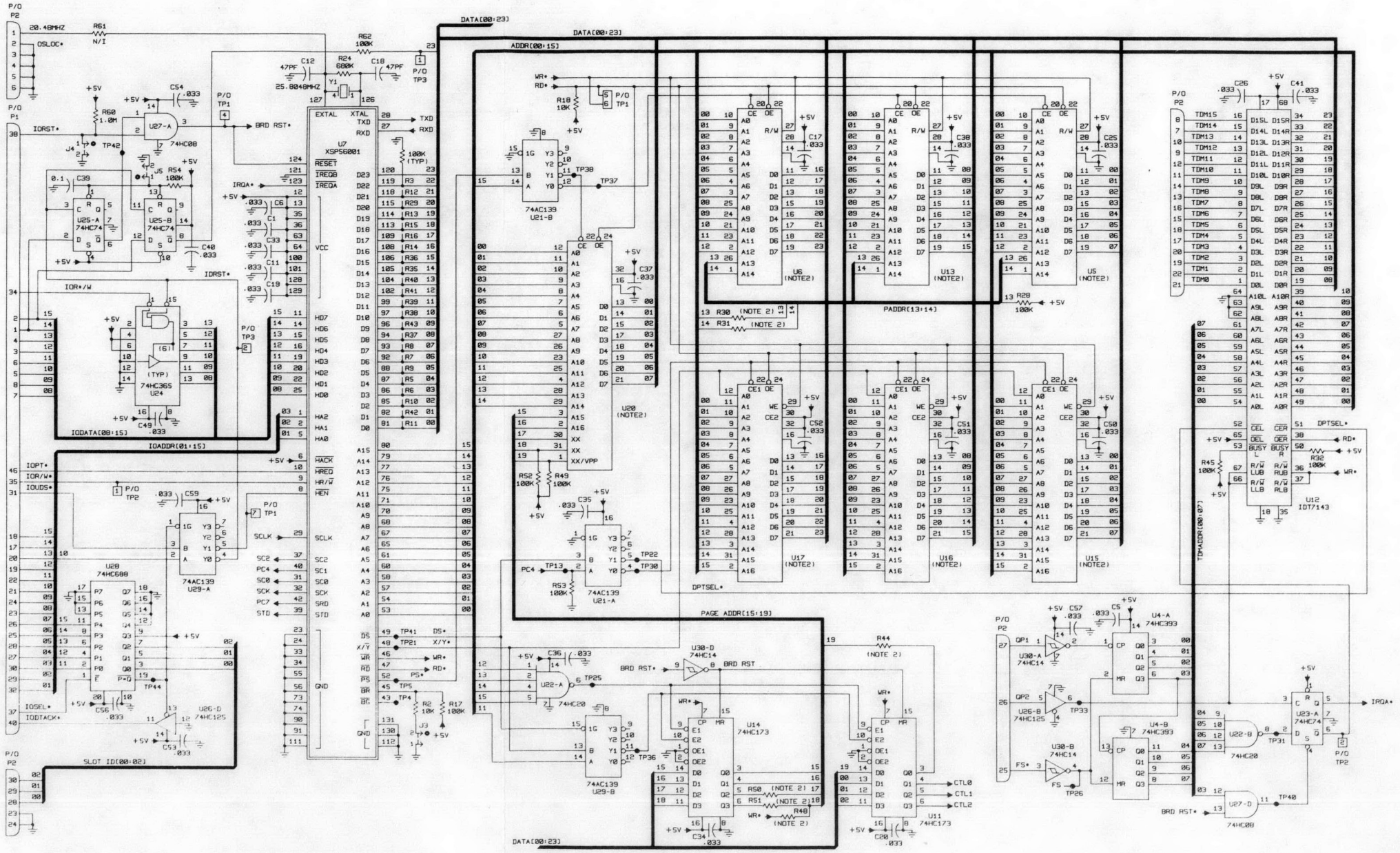

Figure E-6. Type 796927-3, Flex Demod/Activity Monitor Assembly Schematic Diagram 581142 (Ver 2.01) (Sheet 1 of 2) (B)

Courtesy of http://BlackRadios.terryo.org

WN WITH A LOGIC '1' CONTROL INPUT.
O USE VARIOUS DENSITY MEMORY CHIPS FOR U5,U6,U13,U15.
THE FOLLOWING LISTS EACH ASSY DASH NO.(TYPE). IT'S
RATION, PART NO. AND WHICH 0-OHM RESISTORS MUST BE INSTALLED.

N	TYPE	U20(EPROM)			U5.6.13(SRAM)**		U15.16.17(SRAM)***		0-OHM JUMPERS*					
		SCD NO.	PART NO.	ORG.	PART NO.	ORG.	PART NO.	ORG.	R30	R31	R44	R48	R50	R51
EMOD	796927-1	841741	27C010	128K X 8	MTSC6408	8K X 8	MTSC2568	32K X 8	N	N	N	N	N	N
R. LEVEL 1	796927-2	841793	27C010	128K X 8	MTSC6408	8K X 8	MTSC2568	32K X 8	N	N	N	N	N	N
R. LEVEL 2	796927-3	841794	27C010	128K X 8	MTSC6408	8K X 8	MTSC2568	32K X 8	N	N	N	N	N	N

R INSTALLED. N= NOT INSTALLED

8 SRAM IS SHOWN ON THE SCHEMATIC. WHEN A 28-PIN
INSTALLED. PIN 26 IS CE2 (VS.A13) AND PIN1 IS

X 8 SRAM IS SHOWN ON THE SCHEMATIC. WHEN A 28-PIN
S INSTALLED. PINS 1 THRU 28 CORRESPOND TO PINS 3 THRU 30
EVICE.

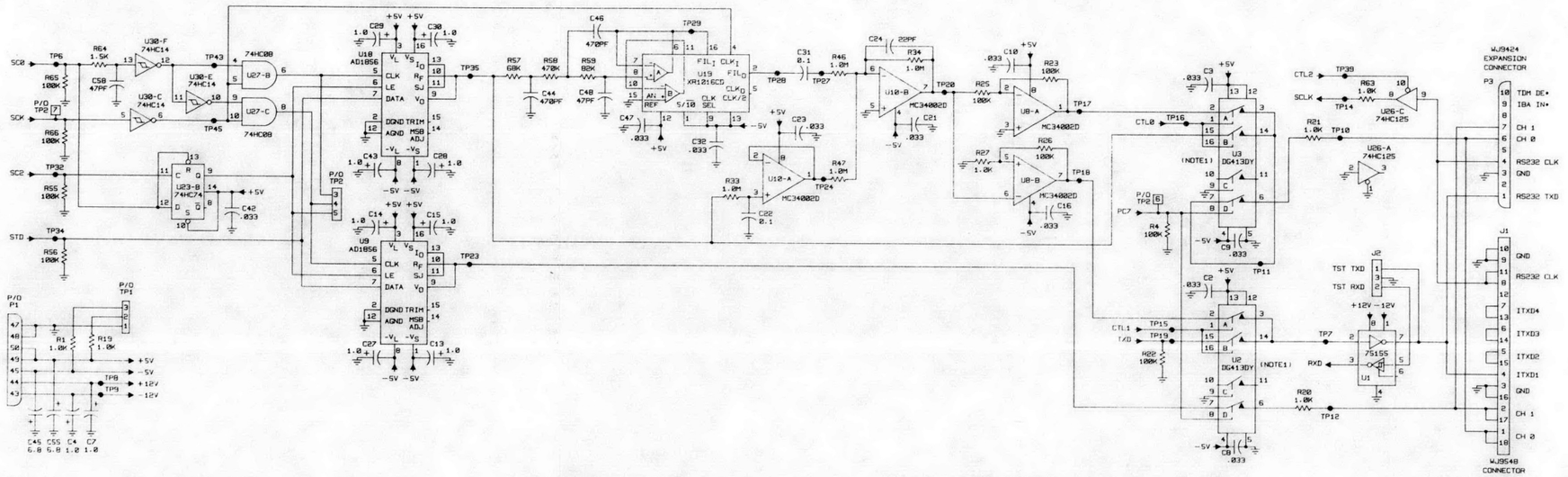

Figure E-6. Type 796927-3, Flex Demod/Activity Monitor Assembly Schematic Diagram 581142 (Ver 2.01) (Sheet 2 of 2) (B)

Courtesy of http://BlackRadios.terryo.org

APPENDIX F

WJ-954X/T1 T1 OUTPUT FORMATTER OPTION

NOTE

For information on software compatibility between this option and the WJ-954X chassis software, refer to **Table 1-2** in the WJ-954X base manual.

Copyright © Watkins-Johnson Company 1994
All Rights Reserved

WATKINS-JOHNSON COMPANY
700 QUINCE ORCHARD ROAD
GAITHERSBURG, MARYLAND 20878-1794

November 1994

Courtesy of http://BlackRadios.terryo.org

WARNING

This equipment utilizes voltages which are potentially dangerous and may be fatal if contacted. Exercise extreme caution when working with the equipment with any protective cover removed.

PROPRIETARY STATEMENT

This document and subject matter disclosed herein are proprietary items to which Watkins-Johnson Company retains the exclusive right of dissemination, reproduction, manufacture and sale.

This document is provided to the individual or using organization for their use alone in the direct support of the associated equipment unless permission for further disclosure is expressly granted in writing.

Courtesy of http://BlackRadios.terryo.org

TABLE OF CONTENTS

APPENDIX F

Paragraph		Page
F.1	Electrical Characteristics	F-1
F.2	Mechanical Characteristics	F-2
F.3	Installation	F-2
F.3.1	Field Installation Procedures for the PC Assembly, the Data Output Cable Assembly (T1-W1), and the Clock Input Cable Assembly (T1-W2)	F-2
F.3.2	Connector Descriptions	F-5
F.3.3	T1 Output Connector (T1 OUT X)	F-6
F.3.4	Optional T1 Clock Input Connector (T1 CLK X)	F-6
F.3.4.1	Using a T1 Data Line Input as an External Clock Source	F-6
F.3.4.2	Using a 772 kHz AC-Coupled Squarewave as an External Clock Source	F-6
F.3.4.3	Using a 772 kHz AC-Coupled Sinewave as an External Clock Source	F-6
F.4	Operation	F-6
F.4.1	Local Operations	F-7
F.4.1.1	Selecting the WJ-954X/T1 Option for Control	F-7
F.4.1.2	Selecting the T1 Output Formatter Operating Mode	F-8
F.4.1.3	Selecting the T1 Line Encoding Format	F-8
F.4.1.4	Selecting the Source of the T1 Transmit Clock	F-8
F.4.1.5	Framing Selection	F-8
F.4.1.6	Entering the T1 Line Length	F-9
F.4.1.7	Selecting a Demodulator for a T1 Formatter Channel	F-9
F.4.1.8	Selecting the Compression Type for a T1 Channel	F-9
F.4.2	Remote Operations	F-10
F.4.2.1	Selecting the WJ-954X/T1 Option for Control	F-12
F.4.2.2	Connecting WJ-954X Demodulators to T1 Channels and Selecting the T1 Channel Compression	F-12
F.4.2.3	Selecting the T1 Output Formatter Operating Mode	F-12
F.4.2.4	Selecting the T1 Line Encoding Format	F-13
F.4.2.5	Selecting the Source of the T1 Transmit Clock	F-13
F.4.2.6	Framing Selection	F-13
F.4.2.7	Entering the T1 Line Length	F-13
F.5	Unit Numbering Method	F-14
F.6	Reference Designation Prefix	F-14
F.7	List of Manufacturers	F-14
F.8	Parts List	F-14
F.9	Type WJ-954X/T1 T1 Output Formatter Option	F-16
F.9.1	Type 796982-1 T1 Formatter PC Assembly	F-17

LIST OF TABLES

Table		Page
F-1		
F-2	Remote Commands for the WJ-954X/T1 Option	F-10

Courtesy of http://BlackRadios.terryo.org

TABLE OF CONTENTS (Continued)

LIST OF ILLUSTRATIONS

Figure		Page
F-1	Field Installation Procedure	F-3
F-2	General Location of the T1 Output Formatter Connectors	F-5
F-3	Main Menu Display	F-7
F-4	Option Configuration Menu	F-7
F-5	T1 Formatter Option Display	F-8
F-6	T1 Formatter Display with Selected Demodulators	F-9
F-7	Type 796982-1, T1 Formatter Assembly, Schematic Diagram 581242	F-21

Courtesy of http://BlackRadios.terryo.org

APPENDIX F

WJ-954X/T1 T1 OUTPUT FORMATTER OPTION

Courtesy of http://BlackRadios.terryo.org

APPENDIX F

WJ-954X/T1 T1 OUTPUT FORMATTER OPTION

F.1 ELECTRICAL CHARACTERISTICS

The WJ-954X/T1 T1 Output Formatter option provides voice-grade data outputs on a standard 1.544 MHz serial T1 line, with a capacity of 24 channels. Each T1 option channel can be directed to carry output data from any demodulator installed in any WJ-954X frame connected in a stacked setup. This option can be used with the WJ-9548 Digital FDM Demultiplexer, the WJ-9543 Channel-Group Demultiplexer, and other members of the WJ-954X-series.

Standard μ255 or Linear compression can be selected on a per channel basis. Framing and T1 line length parameters are also selectable, as well as Binary 8 Zero Suppression (B8ZS) or Alternate Mark Inversion (AMI) line encoding. Three T1 operating modes are available: Normal, TAOS (transmit all ones), and Test. The TAOS and Test modes are used for testing purposes.

The T1 Output Formatter's internal 1.544 MHz clock can be selected to provide the timing for the T1 output transmissions. An accessory cable is provided with this option that can be installed when operation with an external clock is desired. The T1 output transmissions can be synchronized with an external clock by connecting a T1 line, or a 772 kHz ac-coupled sinewave or squarewave to the rear panel clock input connector.

The T1 parameters and demodulator selections can be made locally via the Demultiplexer's front panel controls and displays, or remotely via commands sent from a controller over an IEEE-488 bus.

This option is only compatible with Demultiplexers that are equipped with the Type 796816-3 Control Microprocessor Assembly (A3), the Type 796959-1 Remote Interface Assembly (A43), and Software Release 3.00 or higher. Refer to **Table F-1** for a listing of WJ-9548/T1 T1 Output Formatter option specifications.

Table F-1. WJ-954X/T1 T1 Output Formatter Option Specifications

T1 Output	DSX-1 Cross-Connect compatible; 24 channel capacity, 1.544 Mbps
Line Length	0 to 655 feet
Input/Output Impedance	100 ohms, balanced
Input/Output Connector Type	Triax
Input/Output Overvoltage Protection	1500 Vrms maximum
Line Code	AMI or B8ZS (operator selectable)
Encoding Characteristic	μ255 or Linear (operator selectable on a per-channel basis)
Framing Formats	F4, F12 (D4), F24 (ESF), or F72 (SLC-96) (operator selectable)
Pulse Shape	Compliant with AT&T CB-119
Transmit Clock	Operator selectable internal or external
Internal	Onboard phase-locked 1.544 MHz
External (optional)	Derived from T1 data line input, or from a 772 kHz squarewave or sinewave signal source
Slip Correction	Positive and negative slips corrected on frame boundaries

Courtesy of http://BlackRadios.terryo.org

F.2 MECHANICAL CHARACTERISTICS

The WJ-954X/T1 option consists of a T1 Formatter PC Assembly (WJ P/N 282878-1), a T1-W1 Cable Assembly (WJ P/N 282878-1) and an accessory kit containing a cable marking kit, two female triax-type connectors, and a cable assembly (T1-W2) which can be installed when operation with an external clock input is desired.

The PC assembly can be installed in any vacant option slot in the Demultiplexer's chassis. Cable assembly (T1-W1) includes a triax-type connector that attaches to and protrudes through the rear panel of the unit. The other end of the cable attaches to the PC assembly. A label plate that identifies the T1 output and the slot configuration of the option is installed on the rear panel directly below the option's triax connector.

F.3 INSTALLATION

The WJ-954X/T1 Output Formatter option can be installed at the factory or in the field. For field installation of the option, the existing WJ-954X must be equipped with the Type 796816-3 Control Microprocessor Assembly (A3), the Type 796959-1 Remote Interface Assembly (A43), and Software Release 3.00 or higher. Consult the factory for details on equipment upgrades. **Paragraph F.3.1** provides instructions for installing this option in a compatible WJ-954X in the field.

Cable Assembly T1-W2, which is an accessory item provided for use with an external clock input, is not normally installed at the factory. If operation with an external clock input is desired, the procedures in **paragraph F.3.1** can be used for field installation of Cable Assembly T1-W2.

Paragraph F.3.2 provides descriptions of the rear panel data output connector and the optional clock input connector and their resident signals.

F.3.1 FIELD INSTALLATION PROCEDURES FOR THE PC ASSEMBLY, THE DATA OUTPUT CABLE ASSEMBLY (T1-W1), AND THE CLOCK INPUT CABLE ASSEMBLY (T1-W2)

Perform the following procedures to install the T1 Formatter PC Assembly, the data output cable assembly (T1-W1), and the optional clock input cable assembly (T1-W2).

PC Assembly

1. Loosen 11 retaining screws and remove the top cover from the WJ-954X.

2. Install the T1 Formatter PC Assembly in any vacant option slot (A44 thru A47) in the main chassis (see **Detail A** in **Figure F-1**). A44 is considered option slot #1, A45 is option slot #2, A46 is option slot #3, and A47 is option slot #4.

Cable T1-W1

3. Remove 18 screws and remove the bottom cover from the WJ-954X.

4. Remove the hex nut from the triax connector on the data output cable assembly T1-W1.

Courtesy of http://BlackRadios.terryo.org

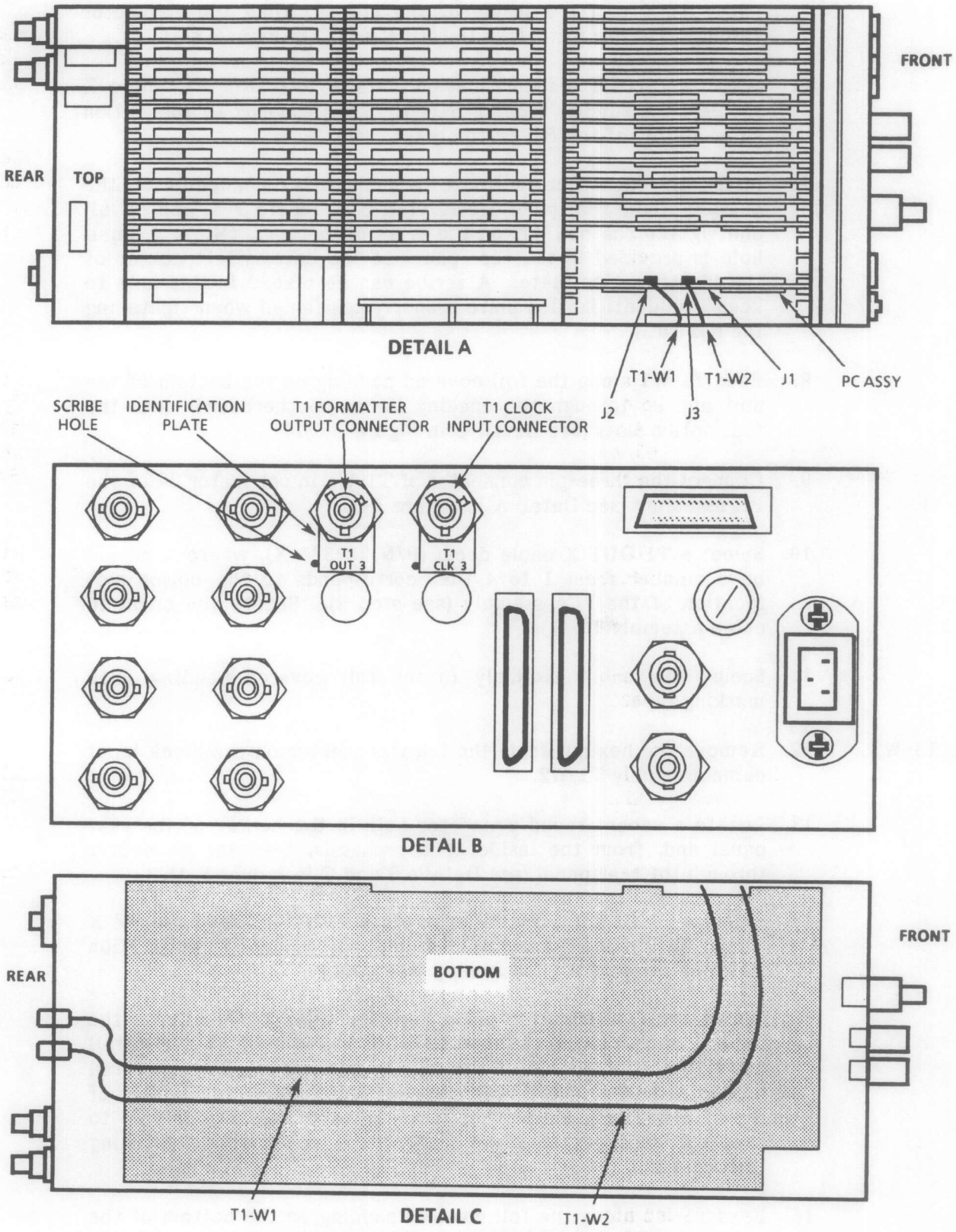

Figure F-1. Field Installation Procedure

Courtesy of http://BlackRadios.terryo.org

5. Locate a vacant round connector hole in the center of the rear panel and, from the inside of the chassis, feed the connector through the rear panel (see Details B and C in **Figure F-1**).

6. Select a T1 OUT X identification plate (P/N 282877-X), where X should be a number from 1 to 4 that corresponds to the option slot location of the PC assembly (see **step 2**).

7. Install the identification plate over the triax connector on the outside of the rear panel (see Detail B in **Figure F-1**) and install and tighten the hex nut on the triax connector. (Note: a small hole is provided in the rear panel at the bottom-left corner of the identification plate. A scribe can be placed in this hole to keep the identification plate properly positioned when tightening the hex nut.)

8. Feed T1-W1 along the foil covered padding on the bottom of the unit and up through the opening in the motherboard, near the four option slots (see Detail C in **Figure F-1**).

9. Connect the three-pin connector of T1-W1 in connector J2 of the PC assembly (see Detail A in **Figure F-1**).

10. Select a T1 OUT X cable decal (P/N 282876-X), where X should be a number from 1 to 4 that corresponds to the option slot location of the PC assembly (see **step 2**). Secure the decal to cable assembly T1-W1.

11. Secure the cable assembly to the foil covered padding with masking tape.

Cable T1-W2

12. Remove the hex nut from the triax connector on the clock input cable assembly T1-W2.

13. Locate a vacant round connector hole in the center of the rear panel and, from the inside of the chassis, feed the connector through the rear panel (see Details B and C in **Figure F-1**).

14. Select a T1 CLK X identification plate (P/N 282880-X), where X should be a number from 1 to 4 that corresponds to the option slot location of the PC assembly (see **step 2**).

15. Install the identification plate over the triax connector on the outside of the rear panel (see Detail B in **Figure F-1**) and install and tighten the hex nut on the triax connector. (Note: a small hole is provided in the rear panel at the bottom-left corner of the identification plate. A scribe can be placed in this hole to keep the identification plate properly positioned when tightening the hex nut.)

16. Feed T1-W2 along the foil covered padding on the bottom of the unit and up through the opening in the motherboard, near the four option slots (see Detail C in **Figure F-1**).

Courtesy of http://BlackRadios.terryo.org

17. Connect the three-pin connector of T1-W2 in connector J3 of the PC assembly (see Detail A in **Figure F-1**).

18. Select a T1 CLK X cable decal (P/N 282879-X), where X should be a number from 1 to 4 that corresponds to the option slot location of the PC assembly (see **step 2**). Secure the decal to cable assembly T1-W2.

19. Secure the cable assembly to the foil covered padding with masking tape.

20. Reinstall the top and bottom covers

F.3.2 CONNECTOR DESCRIPTIONS

Figure F-2 shows one possible version of the locations of the triax-type connectors included with the WJ-954X/T1 option. These connectors can be located in any two of the four holes available in the rear panel that are designated J18 thru J21 (actual location depends on other installed options). One connector provides the T1 data output and is labeled T1 OUT X, where X is a number that corresponds to the slot location of the option (1, 2, 3, or 4). The other connector is optional for an external clock input and is labeled T1 CLK X.

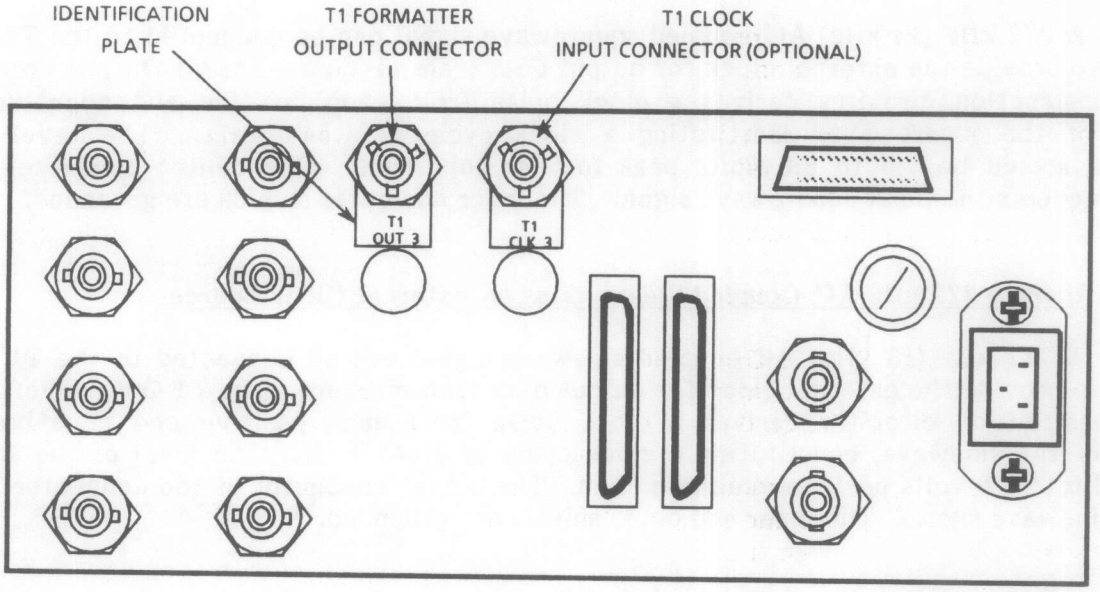

Figure F-2. General Location of the T1 Output Formatter Connectors

Courtesy of http://BlackRadios.terryo.org

F.3.3 T1 OUTPUT CONNECTOR (T1 OUT X)

This male triax-type connector provides the standard 1.544 MHz serial T1 line output. Output impedance is 100 ohms. A mating triax female type connector (Trumpeter P/N PL75-8) is provided as an accessory item with the option for connection to this connector. It is recommended that a Belden 8227 100 ohm cable, or equivalent, be used.

F.3.4 **OPTIONAL T1 CLOCK INPUT CONNECTOR (T1 CLK X)** - This male triax-type connector accepts an external clock input to be used for synchronizing the T1 output transmission. Input impedance is 100 ohms. The clock can be derived from a T1 line connected to this connector or it can be derived from an external 772 kHz AC-coupled squarewave or sinewave signal source. The following paragraphs provide details of these three external clock sources. A mating female triax-type connector (Trumpeter P/N PL75-8) is provided as an accessory item with the option for connection to this connector.

F.3.4.1 Using a T1 Data Line Input as an External Clock Source

A T1 data line input can be connected to the T1 CLK X connector to provide the external clock for output data transmissions. The input data should be either all 1's or B8ZS line encoded in order to ensure an adequate density of 1's. The output transmissions will be at the same rate as the input data. The data on the input is ignored by the T1 Output Formatter option. The center conductor and the inner shield of the connector accepts the differential data input. The outer shield is grounded.

F.3.4.2 Using a 772 kHz AC-Coupled Squarewave as an External Clock Source

A 772 kHz (±3 kHz) AC-coupled squarewave signal can be connected to the T1 CLK X connector to provide the external clock for output data transmissions. The T1 Output Formatter's clock reconstruction circuitry derives a clock pulse from each positive and negative going transition of the squarewave, constituting a clock cycle of 1.544 MHz. The level of the squarewave should be 1.0 to 8.0 volts peak-to-peak minimum. The center conductor of the connector accepts the input squarewave signal. The inner and outer shields are grounded.

F.3.4.3 Using a 772 kHz AC-Coupled Sinewave as an External Clock Source

A 772 kHz (±3 kHz) AC-coupled sinewave signal can be connected to the T1 CLK X connector to provide the external clock for output data transmissions. The T1 Output Formatter's clock reconstruction circuitry derives a clock pulse from each positive and negative going transition of the sinewave, constituting a clock cycle of 1.544 MHz. The level of the sinewave should be 2.0 to 8.0 volts peak-to-peak minimum. The center conductor of the connector accepts the input sinewave signal. The inner and outer shields are grounded.

F.4 OPERATION

The outputs of 24 demodulators can be selected for reconstruction in T1 format, and made available at the option's T1 output connector located on the rear panel of the Demultiplexer. The demodulator outputs can be selected locally via the front panel, or remotely via an IEEE-488 bus. Refer to **paragraph F.4.1** for local operations and **paragraph F.4.2** for remote operations.

Courtesy of http://BlackRadios.terryo.org

F.4.1 LOCAL OPERATIONS

F.4.1.1 Selecting the WJ-954X/T1 Option for Control

Before a demodulator can be selected to provide a T1 formatted output, the T1 Output Formatter option must first be selected for configuration changes. To select the WJ-954X/T1 option, first select the OPTION CONFIGURATION menu item in the Main Menu (see **Figure F-3**).

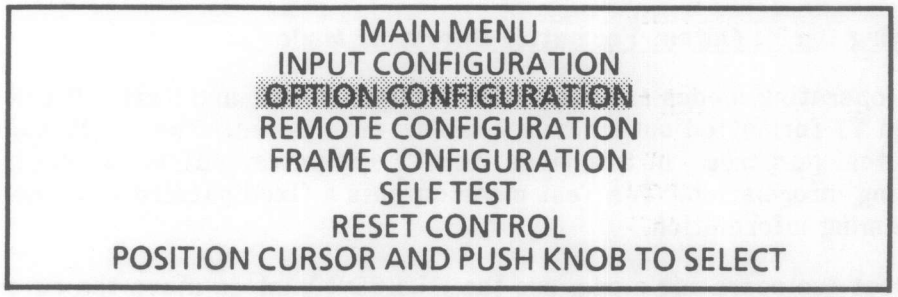

Figure F-3. Main Menu Display

The Option Configuration Menu is displayed showing the T1 Output Formatter option and its option slot location In the Demultiplexer (see **Figure F-4.** Move the cursor to the T1 FORMATTER menu item and push the CURSOR knob or the ENTER key to select the option and to display the T1 Formatter display (**Figure F-5**).

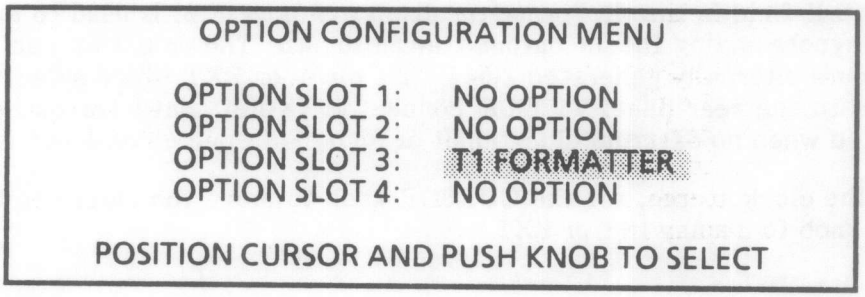

Figure F-4. Option Configuration Menu

Courtesy of http://BlackRadios.terryo.org

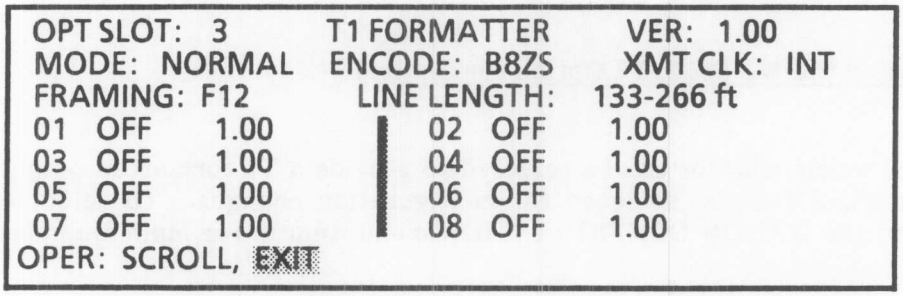

Figure F-5. T1 Formatter Option Display

F.4.1.2 Selecting the T1 Output Formatter Operating Mode

Three operating modes are available: Normal, TAOS, and Test. The Normal operating mode is used when T1 formatted output transmissions are desired. The TAOS mode (Transmit All Ones) is used for test purposes. In this mode, the T1 Formatter outputs a one (1) for each time slot with no framing information. The Test mode outputs a fixed pattern into each time slot (1=1, 2=2, etc.) with framing information.

To select the operating mode, use the CURSOR knob to move the cursor to the MODE field and use the EDIT knob to select the mode (see **Figure F-5**).

F.4.1.3 Selecting the T1 Line Encoding Format

Two types of T1 standard encoding formats are available for the T1 output line: Alternate Mark Inversion (AMI) and Binary 8 Zero Suppression (B8ZS). To select the line encoding format, use the CURSOR knob to move the cursor to the ENCODE field (see **Figure F-5**). Use the EDIT control to select B8ZS or AMI. (**Note:** when AMI line encoding is selected, the possibility exists of outputting a contiguous string of zeros that is greater than 15.)

F.4.1.4 Selecting the Source of the T1 Transmit Clock

The XMT CLK field in the T1 Formatter display (**Figure F-6**) is used to enter the clock source to be used for synchronizing the T1 output transmissions. The selection can be either INT which selects the option's internally generated 1.544 MHz clock or EXT which selects the external clock input connected to the rear panel T1 CLK connector. (**Note:** data transmission slips will occur if EXT is selected when no external clock input or an out-of-spec clock input is connected.)

To select the clock source, use the CURSOR knob to move the cursor to the XMT CLK field and use the edit knob to display INT or EXT

F.4.1.5 Framing Selection

Three T1 standard framing formats are available for selection: 4-Frame Multiframe (referred to as F4), 12-Frame Multiframe (F12), 24-Frame Multiframe (F24), and 72-Frame Multiframe (F72). F12 is identical to D4 framing. F24 is identical to Extended Superframe (ESF) framing. F72 is identical to SLC-96 framing. (**Note:** all framing formats are clear channel, i.e. no signaling capability from the T1 Output Formatter option.)

Courtesy of http://BlackRadios.terryo.org

To select the framing format, use the CURSOR knob to move the cursor to the FRAMING field and use the EDIT control to display F4, F12, F24, or F72.

F.4.1.6 Entering the T1 Line Length

The LINE LENGTH field in the T1 Formatter display is provided to allow the entry of the length of the T1 transmission line. Five lengths are available for selection: 0-133 feet, 133-266 feet, 266-399 feet, 399-533 feet, or 533-655 feet. To enter the desired line length, use the CURSOR knob to move the cursor to the LINE LENGTH field. Use the EDIT control to select 0-133 ft, 133-266 ft, 266-399 ft, 399-533 ft, or 533-655 ft.

F.4.1.7 Selecting a Demodulator for a T1 Formatter Channel

Figure F-5 shows a T1 Formatter Option display with each channel defaulted to 00 indicating a demodulator is not selected and with the T1 channel set to off, as indicated by OFF. If in a stacked configuration, a frame number is also displayed (the 1. in **Figure F-5**). Use the CURSOR knob to move the cursor to the frame and demodulator fields and use the EDIT knob to select the frame (1-8), if required, and the demodulator within the frame (1-24). Entering a demodulator number selects the demodulator and causes OFF to be replaced with DEMOD (see **Figure F-6**). This indicates that a demodulator is providing voice-grade data for the T1 channel. Eight T1 channels can be viewed on the display at one time. To view the remaining channels, use the CURSOR knob to move the cursor to the SCROLL field and use the EDIT control to scroll the display.

F.4.1.8 Selecting the Compression Type for a T1 Channel

Two compression types are available for each T1 channel: Linear or U255. The compression type currently selected is displayed in the field to the right of the selected demodulator number for each T1 channel line (see **Figure F-6**). If no demodulator is selected for a channel (the channel is OFF), the compression field is blank (see **Figure F-5**).

To enter the compression type for a channel with a selected demodulator, use the CURSOR knob to move the cursor to the compression field located to the right of the demodulator number. Use the EDIT knob to display LIN for Linear compression or U255 for μ255 compression.

```
OPT SLOT: 3        T1 FORMATTER      VER: 1.00
MODE: NORMAL   ENCODE: B8ZS      XMT CLK: INT
FRAMING: F12        LINE LENGTH:  133-266 ft
01  DEMOD  1.01 LIN  |  02  DEMOD  1.02 U255
03  DEMOD  1.03 U255 |  04  DEMOD  1.04 LIN
05  OFF    1.00      |  06  DEMOD  1.06 U255
07  DEMOD  1.07 LIN  |  08  OFF    1.00
OPER: SCROLL, EXIT
```

Figure F-6. T1 Formatter Display with Selected Demodulators

Courtesy of http://BlackRadios.terryo.org

F.4.2 REMOTE OPERATIONS

Table F-2 lists the commands and queries used for remote control of the WJ-954X/T1 option. Command arguments are accepted as forgiving numeric representation (nrf); response formats are provided as numeric response integers (nr1). See **paragraph 2.6.2** in the WJ-954X Instruction Manual for further details on numeric data representation.

Table F-2. Remote Commands for the WJ-954X/T1 Option

Command	Response	Description
OPS nrf		Select the option slot number for configuration changes. See **paragraph F.4.2.1.** Range: 1 to 4
OPS?	OPS nr1	Request the current selected option slot number. Response example: OPS 2
ASG nrf,nrf,nrf,nrf		Set the T1 channel number (first nrf), the frame number (second nrf), the demodulator number (third nrf), and the compression type (fourth nrf). The set demodulator within the set frame provides data to the set T1 channel. See paragraph B.4.2.2. T1 channel range: 1 to 24 Frame range: 0 to 8 Demodulator range: 0 to 24 (0 turns off the T1 channel) Compression range: 0 = u255, 1 = Linear
ASG nrf?	ASG nr1,nr1,nr1,nr1	Request the frame (second nr1), the demodulator (third nr1), and the compression type (fourth nr1) for the T1 channel specified by nrf. The first nr1 indicates the T1 channel. Response example: ASG 12,0,02,1
TCK nrf		Select the clock used for synchronizing T1 transmission. See **paragraph F.4.2.5.** Range: 0 = T1 option's internal clock 1 = a connected external input clock
TCK?	TCK nr1	Request the clock being used for synchronizing T1 transmission. Response example: TCK 0

Courtesy of http://BlackRadios.terryo.org

Table F-2. Remote Commands for the WJ-954X/T1 Option (Continued)

Command	Response	Description
TEN nrf		Set the T1 line encoding format. See **paragraph F.4.2.4.** Range: 0 = B8ZS 1 = AMI
TEN?	TEN nrl	Request the T1 line encoding format selected. Response example: TEN 1
TFR nrf		Set the framing format. See **paragraph F.4.2.6.** Range: 0 = 4-Frame Multiframe (F4) 1 = 12-Frame Multiframe (F12) 2 = 24-Frame Multiframe (F24) 3 = 72-Frame Multiframe (F72)
TFR?	TFR nrl	Request the framing format selected. Response example: TFR 2
TLL nrf		Enter the length of the T1 transmission line. See **paragraph F.4.2.7.** Range: 0 = 0-133 feet 1 = 133-266 feet 2 = 266-399 feet 3 = 399-533 feet 4 = 533-655 feet
TLL?	TLL nrl	Request the set T1 transmission line length. Response example: TLL 3
TMD nrf		Select the T1 formatter operating mode. See **paragraph F.4.2.5.** Range: 1 = Normal 2 = Transmit All Ones (TAOS) 3 = Test
TMD?	TMD nrl	Request the current T1 formatter operating mode. Response example: TMD 1

Courtesy of http://BlackRadios.terryo.org

F.4.2.1 Selecting the WJ-954X/T1 Option for Control

Before demodulators can be selected to provide T1 formatted outputs, the T1 Formatter option must first be selected for configuration changes. The OPS command and argument is used to select options slots 2, 3, or 4. This command must always precede, on the same program line, any /T1 option command intended for slots 2, 3, or 4. If a slot number is not specified on the program line, the Demultiplexer directs the command to the option in slot 1. Each remote command on the program line should be delimited with a semicolon. Before selecting the option, it can first be determined in which of the four option slots the T1 Formatter option is located (*OPT?). Then send the OPS command with an argument of 2, 3, or 4 (as determined by option slot location) followed by a semicolon and the rest of the program line. Subsequent to processing a command line, the Demultiplexer would return to its control of slot 1. See the main manual for more information on the *OPT? query.

F.4.2.2 Connecting WJ-954X Demodulators to T1 Channels and Selecting the T1 Channel Compression

The ASG command and four arguments are used to connect the demodulators to the T1 formatter channels and to set the compression for the T1 channels. The first argument is used to select the T1 channel number from 1 to 24. The second argument is used to select the frame number in which the demodulator is located. If the frame is in a stacked setup, the argument can be any number from 1 to 8. If the frame is a stand-alone, 0 is to be entered for the frame number. The third argument is used to select the demodulator number, from 1 to 24. A T1 channel can be turned off by sending 0 in the demodulator argument. The fourth argument is used to set the compression for the T1 channel. Entering a 0 in this argument selects μ255 compression and 1 selects Linear compression.

The ASG nrf? query can be used to determine the currently selected demodulator for a T1 channel (nrf is the T1 channel number from 1 to 24). The response to this query consists of four arguments. The first argument is the T1 channel number requested, the second is the frame number (0-8), where the demodulator is located, the third argument is the demodulator number (0-24), and the fourth argument is the compression mode set for the T1 channel (0 = μ255, 1 = Linear).

F.4.2.3 Selecting the T1 Output Formatter Operating Mode

Three modes of operation are available for the T1 Output Formatter: Normal, Transmit All Ones (TAOS), and Test. Sending TMD 1 places the option in the Normal operating mode. This the mode used for normal T1 output transmissions.

TAOS and Test modes are intended for testing purposes. Sending TDM 2 selects the TAOS operating mode. In this mode a one (1) is transmitted for each time slot. Sending TDM 3 selects the Test operating mode. In this mode a fixed pattern is induced for each time slot (1=1, 2=2, etc.).

The current T1 Output Formatter operating mode can be requested by sending the TDM? query.

Courtesy of http://BlackRadios.terryo.org

F.4.2.4 Selecting the T1 Line Encoding Format

The TEN command is used to select the T1 line encoding format for the T1 outputs. Two types of T1 standard encoding formats are available : Alternate Mark Inversion (AMI) and Binary 8 Zero Suppression (B8ZS). Sending TEN 0 selects B8ZS line encoding, sending TEN 1 selects AMI line encoding. (**Note:** when AMI line encoding is selected, the possibility exists of outputting a contiguous string of zeros that is greater than 15.)

The selected line encoding format can be requested by sending the TEN? query.

F.4.2.5 Selecting the Source of the T1 Transmit Clock

The TCK command and argument is used to select the clock source to be used for synchronizing the T1 output transmissions. Sending TCK 0 selects the option's internal generated 1.544 MHz clock. Sending TCK 1 selects the external clock input connected to the rear panel T1 CLK connector. (**Note:** data transmission timing problems may occur if TCK 1 is sent when no external clock input or an out-of-spec clock input is connected.)

The selected transmit clock source can be requested by sending the TCK? query.

F.4.2.6 Framing Selection

Three T1 standard framing formats are available for selection; 4-Frame Multiframe (typically referred to as F4), 12-Frame Multiframe (F12), and 24-Frame Multiframe (Extended Superframing or ESF), and 72-Frame Multiframe (F72). (**Note:** all framing formats are clear channel, i.e. no signaling capability from the T1 Output Formatter option.)

The TFR command and argument is used to select the framing format. Sending TFR 0 selects F4, TFR 1, selects F12, and TFR 2 selects F24, and TFR 3 selects F72. The selected framing format can be requested by sending the TFR? query.

F.4.2.7 Entering the T1 Line Length

The TLL command and argument is used to select the length of the T1 transmission line. Five lengths are available for selection: 0-133 feet, 133-266 feet, 266-399 feet, 399-533 feet, or 533-655 feet. Sending TLL 0 selects 0-133 feet, TLL 1 selects 133-266 feet, TLL 2 selects 266-399 feet, TLL 3 selects 399-533 feet, and TLL 4 selects 533-655 feet. The current selected line length can be requested by sending the TLL? query.

Courtesy of http://BlackRadios.terryo.org

F.5 UNIT NUMBERING METHOD

The method of numbering used throughout the unit is assigning reference designations (electrical symbol numbers) to identify: assemblies, subassemblies, modules within a subassembly, and discrete components. An example of the unit numbering method used is as follows:

Subassembly Designation A1	R1 Class and No. of Item
Identify from right to left as:	First (1) resistor (R) of
	first (1) subassembly (A)

On the main chassis schematic, components which are an integral part of the main chassis have no subassembly designations.

F.6 REFERENCE DESIGNATION PREFIX

The use of partial reference designations are used on the equipment and on the manual illustrations. This partial reference designation consists of the component type letter(s) and the identifying component number. The complete reference designation may be obtained by placing the proper prefix before the partial reference designation. Reference designation prefixes are included on the drawings and illustrations in the figure titles (in parenthesis).

F.7 LIST OF MANUFACTURERS

The manufacturers listed below are supply sources used for obtaining certain parts in this option, and are not listed in the base manual. All other manufacturers not listed below can be found in the base manual.

Mfr. Code	Name and Address
0N0T8	Level 1 Technologies, Inc. 83 Enterprise Drive Marshfield, MA 02050
14949	Trumpeter Electronics, Inc. 31186 LaBaya Drive Westlake Village, CA 91359
8Z573	JS Terminal Corporation 1380 Brummel Avenue Elk Grove Village, IL 60007

F.8 PARTS LIST

The following parts lists contain all the electrical components used in the unit, along with mechanical parts which may be subject to unusual wear or damage. When ordering replacement parts from the Watkins-Johnson Company, specify the unit type, the serial number, and the option configuration. Also include the reference designation and the description of each item ordered. The list of manufacturers, provided in **paragraph F.7**, and the manufacturer's part number, provided in **paragraph F.9**, are supplied as a guide to aid the user of the equipment while in the field. The parts listed may not necessarily be identical with the parts installed in the unit. The parts listed in **paragraph F.9** will provide for satisfactory unit operation.

Courtesy of http://BlackRadios.terryo.org

Replacement parts may be obtained from any manufacturer provided that the physical characteristics and electrical parameters of the replacement item are compatible with the original part. In the case where components are defined by a military or industrial specification, a vendor which can provide the necessary component is suggested as a convenience to the user.

NOTE

As improved semiconductors become available, it is the policy of Watkins-Johnson to incorporate them in proprietary products. For this reason some transistors, diodes and integrated circuits installed in the equipment may not agree with those specified in the parts lists and schematic diagrams of this manual. However, the semiconductors designated in the manual may be substituted in every case with satisfactory results.

Courtesy of http://BlackRadios.terryo.org

F.9 TYPE WJ-954X/TI TI OUTPUT FORMATTER OPTION

REF DESIG	DESCRIPTION	QTY PER ASSY	MANUFACTURER'S PART NO.	MFR. CODE	RECM VENDOR
	Revision A				
T1-A1	T1 Formatter PC Assembly	1	796982-1	14632	
T1-W1	Cable Assembly, Data Output	1	282878-1	14632	
T1-W1J1	Connector, Triax	2	BJ79-45	14949	
T1-W1P1	Housing, Connector, 3-Pin	2	XHP-3	9AA37	
T1-W2	Cable Assembly, Clock Input	1	282881-1	14632	
T1-W2J1	Same as T1-W1J1				
T1-W2P1	Same as T1-W1P1				

Courtesy of http://BlackRadios.terryo.org

F.9.1 TYPE 796982-1 T1 FORMATTER PC ASSEMBLY

REF DESIG	DESCRIPTION	QTY PER ASSY	MANUFACTURER'S PART NO.	MFR. CODE	RECM VENDOR
	Revision 03				
C1	Capacitor, Ceramic: .033 µF, 10%, 50 v	43	841415-022	14632	
C2 Thru C6	Same as C1				
C7	Capacitor, Ceramic: 100 pF, 5%, 50 V	1	841415-007	14632	
C8 Thru C15	Same as C1				
C16	Capacitor, Ceramic: .1 µF, 10%, 50 VDC	2	841250-25	14632	
C17	Same as C1				
C18	Same as C16				
C19	Capacitor, Tantalum: 1.0 µF, 20%, 16 V	1	841293-04	14632	
C20 Thru C23	Same as C1				
C24	Capacitor, Tantalum: 68 µF, 20%, 6.3 V	2	841293-24	14632	
C25 Thru C38	Same as C1				
C39	Capacitor, Tantalum: 3.3 µF, 20%, 16 V	2	841293-10	14632	
C40	Same as C1				
C41	Same as C39				
C42	Capacitor, Tantalum: 6.8 µF, 20%, 6.3 V	1	841293-14	14632	
C43 Thru C48	Same as C1				
C49	Same as C24				
C50 Thru C52	Same as C1				
CR1	Diode	1	MMBD1203	27014	
J1	Connector, Header, 3-Pin	1	68016-103	22526	
J2	Connector, Header, 3-Pin	2	S-3.B-XH-A	8Z573	
J3	Same as J2				
J4	Connector, Header, PC Mounted	1	68705-102	22526	
P1	Connector, Edge Finger		P/O PCB		
P2	Connector, Edge Finger		P/O BCB		
P3	Connector, Plug	1	11PS-JE	8Z573	
R1	Resistor, Fixed: 100 kΩ, 5%, 1/10 W	36	841414-121	14632	
R2	Same as R1				
R3	Resistor, Fixed: 1.0 MΩ, 5%, 1/10	1	841414-145	14632	
R4	Resistor, Fixed: 22Ω, 5%, 1/10	2	841414-033	14632	
R5 Thru R15	Same as R1				

Courtesy of http://BlackRadios.terryo.org

REF DESIG	DESCRIPTION	QTY PER ASSY	MANUFACTURER'S PART NO.	MFR. CODE	RECM VENDOR
R16	Resistor, Fixed: 1.0 kΩ, 5%, 1/10 W	2	841414-073	14632	
R17	Not Used				
R18	Jumper .05 Ω Max	3	841417	14632	
R19 Thru R23	Same as R1				
R24	Resistor, Fixed: 200Ω, 5%, 1/10 W	2	841414-056	14632	
R25	Same as R18				
R26	Not Used				
R27	Same as R18				
R28	Not Used				
R29	Resistor, Fixed: 10 kΩ, 5%, 1/10 W	1	841414-097	14632	
R30	Same as R24				
R31 Thru R43	Same as R1				
R44	Not Used				
R45	Same as R1				
R46	Same as R1				
R47	Same as R4				
R48	Same as R1				
R49	Same as R1				
R50	Not Used				
R51	Same as R1				
R52	Same as R16				
T1	Transformer	1	PE-65388	01961	
T2	Transformer	1	PE-65351	01961	
U1	Integrated Circuit: CMOS, QUAD 2 Input XOR Gate	1	74AC86	34371	
U2	Integrated Circuit: Dual 4 Bit Binary Ripple Counter	1	74HC393	34371	
U3	Integrated SRAM: 32 k x 8 SRAM CMOS	3	MT5C2568DJ-35	6Y440	
U4	Integrated Circuit: EPROM, Programmed	1	841692	14632	
U5	Integrated Circuit: Digital Signal Processor	1	XSP56001FE27	04713	
U6	Integrated Circuit: Line Driver and Receiver	1	SN75155D	01295	
U7	Integrated Circuit: CMOS, 2 k x 16 Dual Port SRAM	1	1DT7143L70J	61772	
U8	Integrated Circuit: CMOS, Quad Buffer, Line Driver	4	74AC125	04713	
U9	Same as U3				
U10	Integrated Circuit: CMOS, Quad 2-Input or Gate	2	74AC32	34371	
U11	Integrated Circuit: CMOS: Hex Inverters	1	74AC04	04713	
U12	Integrated Circuit: CMOS: Advanced Frame Aligner	1	PEB2035N-V31	25088	
U13	Integrated Circuit: PCM Line Interface	1	CS6154A-IL1	0A384	
U14	Integrated Circuit: Octal-Bus Transceiver/Register	2	74ACT646	34371	

Courtesy of http://BlackRadios.terryo.org

REF DESIG	DESCRIPTION	QTY PER ASSY	MANUFACTURER'S PART NO.	MFR. CODE	RECM VENDOR
U15	Integrated Circuit, CMOS: Hex Buffer, Line Driver	1	74HC365	07029	
U16	Integrated Circuit: Dual 1 of 4 Decoder, Multiplexer	1	74AC139	34371	
U17	Same as U10				
U18	Same as U8				
U19	Integrated Circuit: T1/E1 Clock Adapter, 1.544 MHz/ 2.048 MHz	1	LXP600ANI	0N0T8	
U20	Same as U3				
U21	Integrated Circuit: Dual D Flip-Flop	4	74HC74	04713	
U22	Integrated Circuit: CMOS, 4 Bit Magnitude Comparator	1	74HC85	02735	
U23	Same as U8				
U24	Same as U21				
U25	Integrated Circuit: 8-Input Mux 3-State HCMOS	1	74HCT251	34371	
U26	Integrated Circuit: Hex Inverting Schmitt Triggers	1	74AC14	34371	
U27	Integrated Circuit: CMOS, 8 Bit Synchronous Binary Down Counter	1	74HC40103	34371	
U28	Same as U14				
U29	Integrated Circuit: Quad 2-Input Nand Gate	1	74HC00	02735	
U30	Same as U21				
U31	Integrated Circuit: Quad 2-Input or Gate	1	74HC32	02735	
U32	Same as U8				
U33	Integrated Circuit: Octal D Flip-Flop	1	74HC273	34371	
U34	Integrated Circuit: CMOS Hex D-Type Flip-Flop	1	74HC174	18722	
U35	Same as U21				
XU4	Socket, PC Mount, 14 Pos Single Row	2	SL-114-G-11	55342	
Y1	Crystal, 6.176803 MHz	1	CXT6176	0A384	

Courtesy of http://BlackRadios.terryo.org

THIS PAGE INTENTIONALLY LEFT BLANK

Courtesy of http://BlackRadios.terryo.org

NOTES:

1. UNLESS OTHERWISE SPECIFIED:
   A) RESISTANCE IS IN OHMS, ±5%, 1/10W.
   B) CAPACITANCE IS IN μF.

E FOR INPUT FORMATTER INSTALL 0-OHM RESISTOR
FOR OUTPUT FORMATTER LEAVE 0-OHM RESISTOR UNINSTALLED
(RCVR INSTALL PULLED UP TO 5BPS ON BUS CONTROLLER)

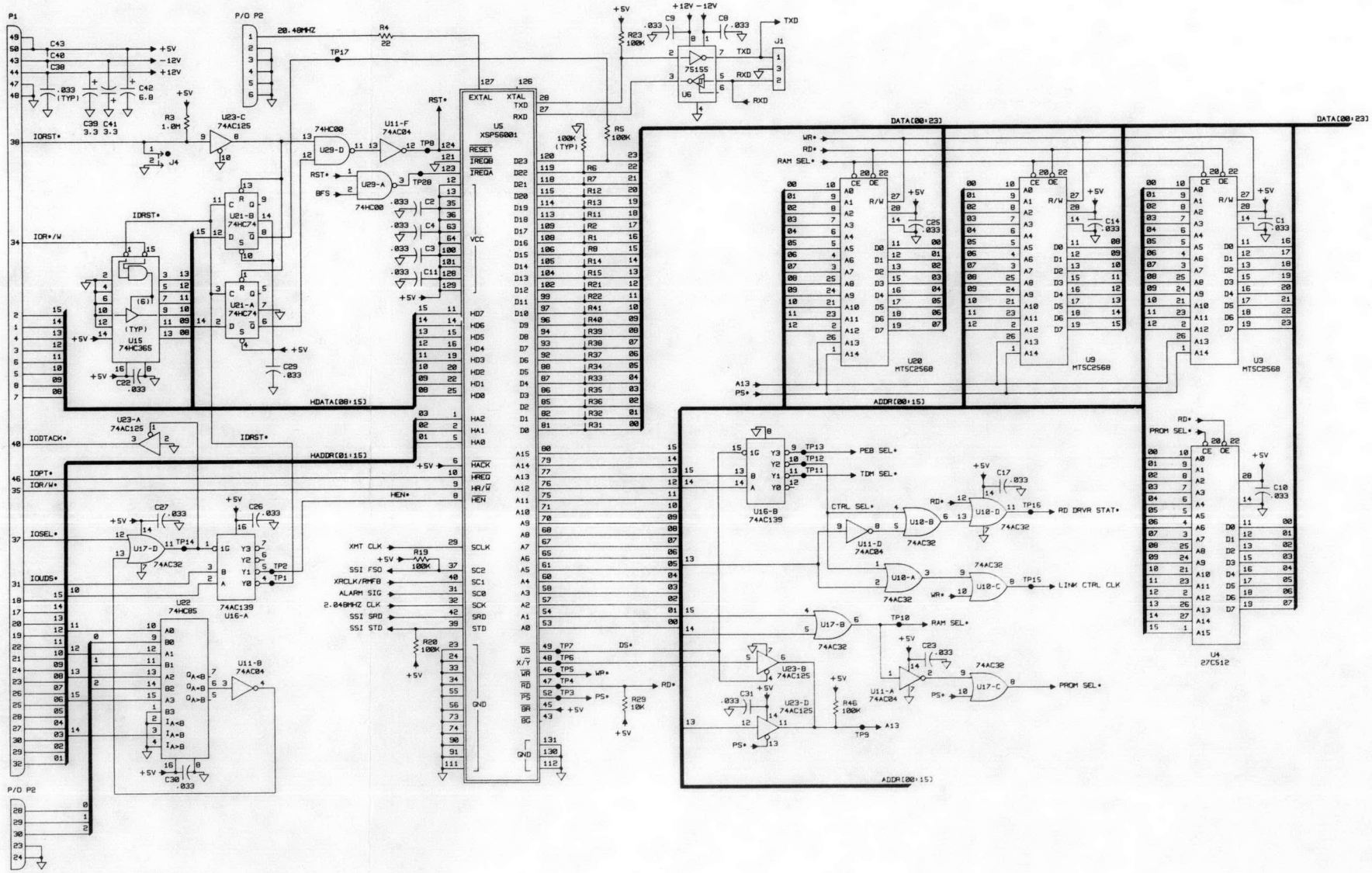

Figure F-7. Type 796982-1, T1 Formatter Assembly
Schematic Diagram 581242 (Sheet 1 of2) (01)

Courtesy of http://BlackRadios.terryo.org

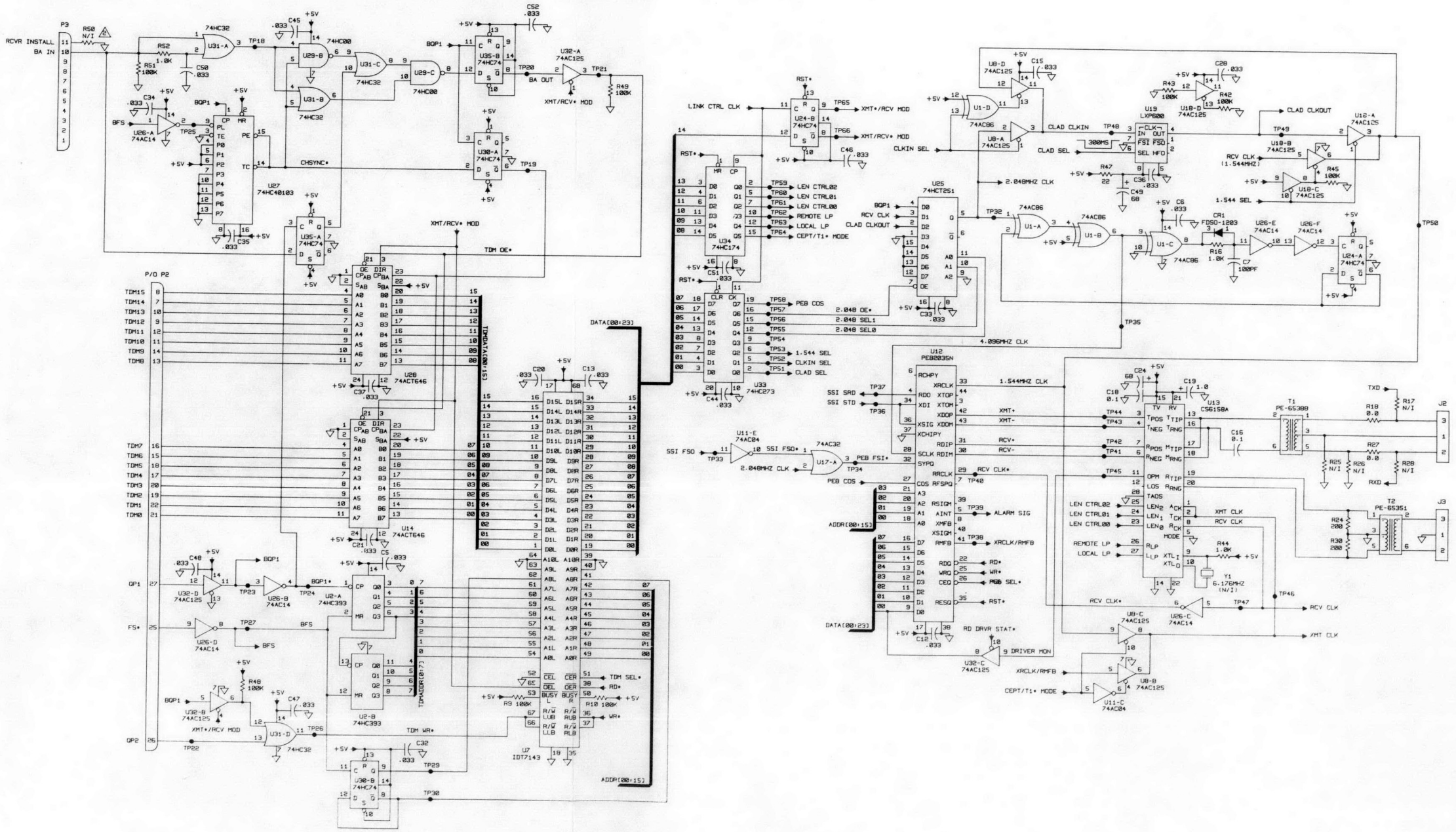

Figure F-7. Type 796982-1, T1 Formatter Assembly Schematic Diagram 581242 (Sheet 2 of2) (01)

Courtesy of http://BlackRadios.terryo.org

APPENDIX G

WJ-9547/422 AND WJ-9548/422 RS-422 REMOTE INTERFACE OPTIONS

Copyright © Watkins-Johnson Company 1993
All Rights Reserved

WATKINS-JOHNSON COMPANY
700 QUINCE ORCHARD ROAD
GAITHERSBURG, MARYLAND 20878-1794

November 1994

Courtesy of http://BlackRadios.terryo.org

WARNING

This equipment utilizes voltages which are potentially dangerous and may be fatal if contacted. Exercise extreme caution when working with the equipment with any protective cover removed.

PROPRIETARY STATEMENT

This document and subject matter disclosed herein are proprietary items to which Watkins-Johnson Company retains the exclusive right of dissemination, reproduction, manufacture and sale.

This document is provided to the individual or using organization for their use alone in the direct support of the associated equipment unless permission for further disclosure is expressly granted in writing.

Courtesy of http://BlackRadios.terryo.org

WJ-9547/422 AND WJ-9548/422 RS-422 REMOTE INTERFACE OPTIONS

APPENDIX G

REVISION RECORD

Revision	Description	Date
A	Initial printing.	9/93
B	Corrected **Figures G-1** and **G-2.** Added new **Figure G-4.** Updated schematic.	10/93
C	Clarified **paragraph G.4.1.**	4/94
D	Updated parts lists.	11/94

Courtesy of http://BlackRadios.terryo.org

TABLE OF CONTENTS

WJ-9547/422 AND WJ-9548/422 RS-422 REMOTE INTERFACE OPTIONS

APPENDIX G

Paragraph		Page
G.1	Introduction	G-1
G.2	Electrical Characteristics	G-1
G.3	Mechanical Characteristics	G-1
G.4	Installation	G-1
G.4.1	RS-422 Remote Interface Connector	G-1
G.4.2	Configuration	G-3
G.5	Operation	G-4
G.5.1	Location Operations	G-4
G.5.2	Remote Operations	G-4
G.5.2.1	RS-422 Interface	G-4
G.5.2.2	RS-422 Communications Protocol	G-5
G.5.2.2.1	XON/XOFF Protocol	G-5
G.5.2.2.2	ENQ/ACQ Protocol	G-5
G.5.2.2.3	Terminator	G-5
G.5.2.2.4	Device Clear	G-5
G.5.2.2.5	Service Request (SRQ)	G-6
G.5.2.2.6	Buffer Handling	G-6
G.5.2.2.6.1	Input Buffer	G-6
G.5.2.2.6.2	Output Buffer	G-6
G.5.2.2.7	Supported RS-422 Communications Control Commands	G-7
G.6	Reference Designation Prefix	G-7
G.7	List of Manufacturers	G-7
G.8	Parts List	G-7
G.9	WJ-9547/422 and WJ-9548/422 Remote Interface Option	G-9
G.9.1	Type 797138-1 & -2 Remote Control Interface PC Assembly (A43)	G-10

LIST OF TABLES

Table		Page
G-1	Supported RS-422 Communications Control Commands	G-7

LIST OF ILLUSTRATIONS

Figure		Page
G-1	Location of the RS-422 Remote Interface Connector	G-2
G-2	Pin Assignments for the RS-422 Remote Interface Connector	G-2
G-3	Remote Interface Configuration Selection	G-3
G-4	Example of the Remote Interface Parameters Display (RS-422 Selected)	G-4
G-5	Type 797138-1 and -2, Remote Control Interface PC Assembly, A43, Schematic Diagram 581558	G-13

Courtesy of http://BlackRadios.terryo.org

APPENDIX G

WJ-9547/422 AND WJ-9548/422 RS-422 REMOTE INTERFACE OPTIONS

Courtesy of http://BlackRadios.terryo.org

APPENDIX G

WJ-9547/422 AND WJ-9548/422 RS-422 REMOTE INTERFACE OPTIONS

G.1 INTRODUCTION

This document covers the WJ-9547/422 and WJ-9548/422 RS-422 Remote Interface options. The option is identical for both units with the exception of the unit identity firmware.

G.2 ELECTRICAL CHARACTERISTICS

The RS-422 Remote Interface option provides the Digital FDM Demultiplexer the capability of being controlled remotely from an IEEE-488 or RS-422 compatible remote controller. The IEEE-488 interface is the same as that identified in **Section II** of the base manual. The RS-422 interface has a full duplex differential operation implemented on the transmit and receive data lines. Specifics on the RS-422 interface are provided in **paragraph G.5.2.1.** Selection of the remote interface to be used is provided by a DIP switch located on the Remote Control Interface PC Assembly.

G.3 MECHANICAL CHARACTERISTICS

The WJ-9547/422 option consists of a Remote Control Interface PC Assembly (WJ P/N 797138-2) a Cable Assembly (WJ P/N 383434-1) and a connector ID Plate (WJ P/N 283176-1).

The WJ-9548/422 option consists of a Remote Control Interface PC Assembly (WJ P/N 797138-1) a Cable Assembly (WJ P/N 383434-1) and a connector ID Plate (WJ P/N 283176-1).

The interface port is provided by a male, 25-pin, D-Type connector located on the rear panel of the unit.

G.4 INSTALLATION

The RS-422 option is installed at the factory prior to shipment of the Digital FDM Demultiplexer. The Remote Control Interface PC Assembly replaces the standard Remote Control Interface PC Assembly at slot location A43. A Cable Assembly is installed that routes the interface between the Motherboard PC Assembly and the rear panel RS-422 remote interface connector (**paragraph G.4.1**).

G.4.1 RS-422 REMOTE INTERFACE CONNECTOR

The RS-422 remote interface connector is located in the lower connector slot on the rear panel of the Digital FDM Demultiplexer (see **Figure G-1**). Pins 2, 3, 7, 14, and 16 of this male, 25-pin, D-Type connector provide the electrical interface (see **Figure G-2**). Pins 2 and 3 are the transmit data (A) and receive data (A) lines respectively. Pins 14 and 16 are the transmit data (B) and receive data (B) lines respectively. In accordance with the EIA RS-422-A standard (December 1978), the voltage on the A terminal is negative with respect to the B terminal for a binary 1 (MARK or OFF) state and positive with respect to the B terminal for a binary 0 (SPACE or ON) state. Pin 7 of the RS-422 remote interface connector is ground. All other pins are not used.

Courtesy of http://BlackRadios.terryo.org

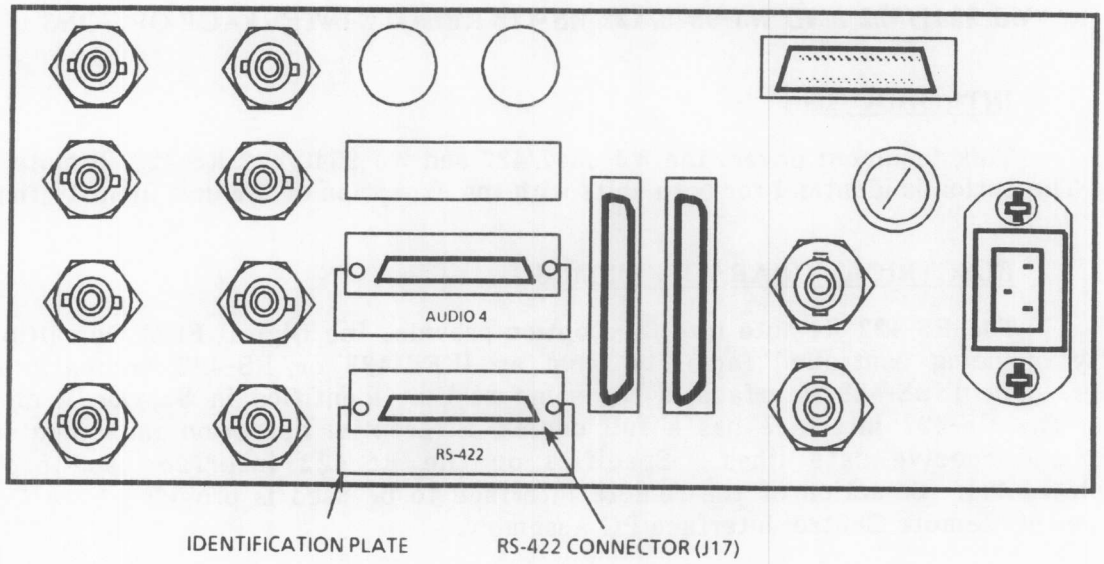

Figure G-1. Location of the RS-422 Remote Interface Connector

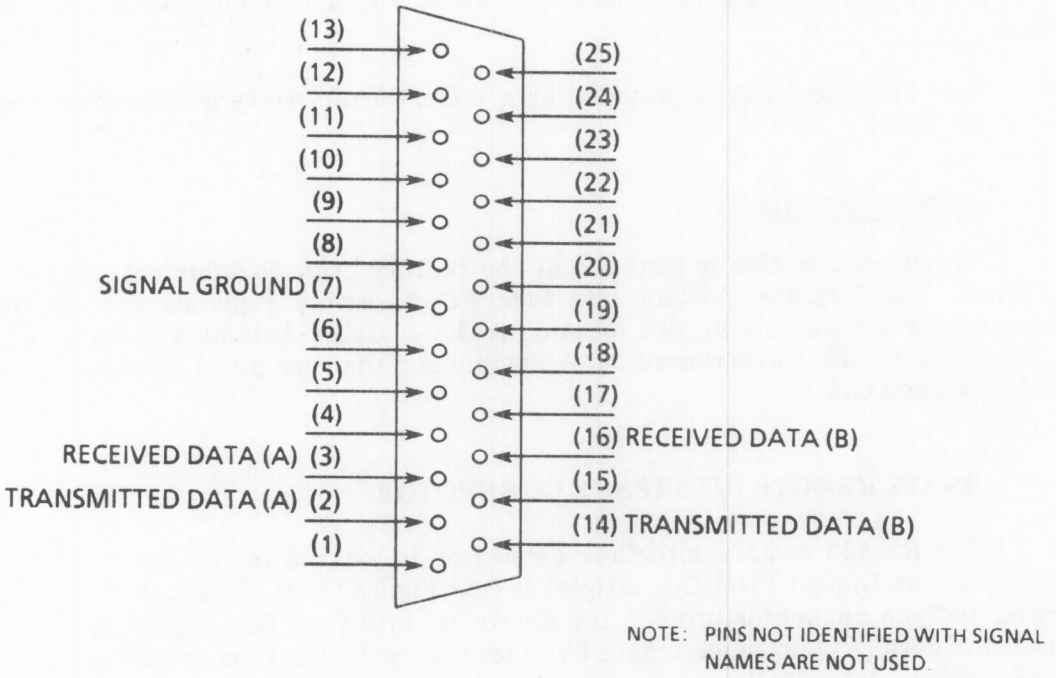

Figure G-2. Pin Assignments for the RS-422 Remote Interface Connector

Courtesy of http://BlackRadios.terryo.org

G.4.2 CONFIGURATION

The Remote Control Interface PC Assembly must be configured for the remote control format to be used (IEEE-488 or RS-422) with switch A43S5-4. The baud rate is set using switches A43S4-2,3,4, and 5. Parity On or Off is selected with switch A43S3-5, and Odd or Even parity is selected with switch A43S4-1. Refer to **Figure G-3** for the location of the switches and the switch configuration settings.

Note

The switch settings are read only when the unit is turned on from a power-down state. Power must be removed and then reapplied before any changes in the switch settings are read and implemented.

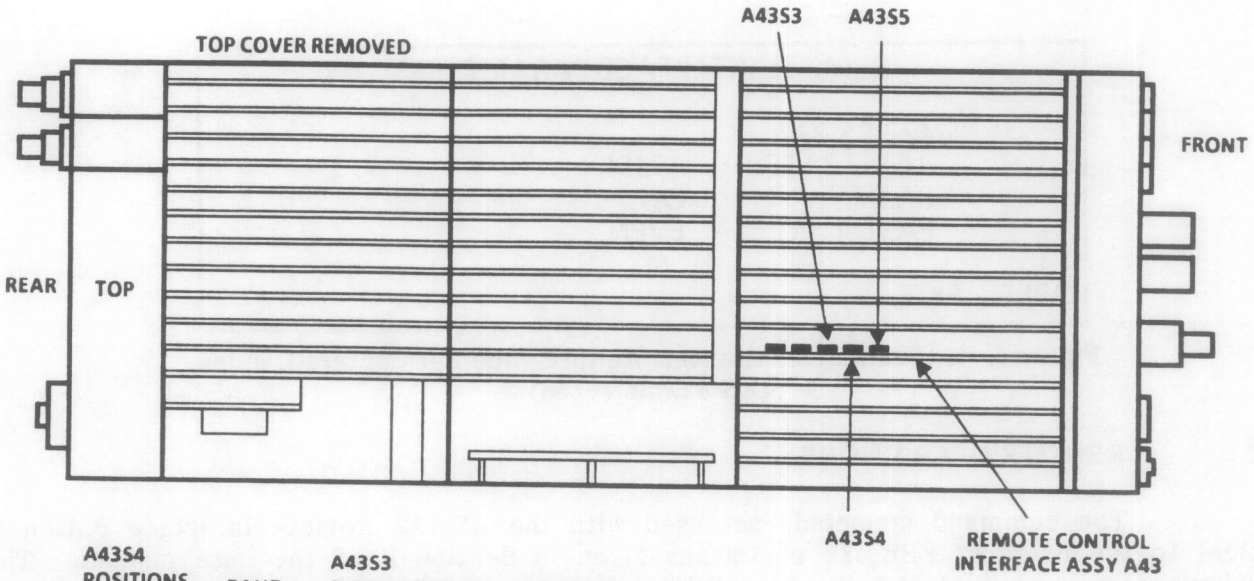

A43S4 POSITIONS 2 3 4 5	BAUD RATE
1 1 1 1	38.4k
1 1 1 0	19.2k
1 1 0 1	9600
1 1 0 0	4800
1 0 1 1	2400
1 0 1 0	1800
1 0 0 1	1200
1 0 0 0	1050
0 1 1 1	600
0 1 1 0	300
0 1 0 1	200
0 1 0 0	150
0 0 1 1	134.5
0 0 1 0	110
0 0 0 1	75
0 0 0 0	50

A43S3

DIPSW POSITION:	FUNCTION:
5	**PARITY SELECTION**
0	OFF
1	ON

A43S4

DIP SW POSITION:	FUNCTION:
1	**PARITY TYPE**
0	EVEN
1	ODD

A43S5

DIP SW POSITION:	FUNCTION:
4	**REMOTE INTERFACE SELECTION**
0	IEEE-488
1	RS-232/422

SWITCH A43SX

1 = ON (CLOSED)
0 = OFF (OPEN)

G-3. Remote Interface Configuration Selection

Courtesy of http://BlackRadios.terryo.org

G.5 OPERATION

G.5.1 LOCAL OPERATIONS

There are no front panel local operations associated with the RS-422 Remote Interface Option. However the current remote interface parameters that are selected via the configuration switches (**paragraph G.4.2**) may be viewed from the front panel if desired. To view the current parameters, select the Remote Configuration menu item from the Main Menu display. **Figure G-4** is an example of the Remote Interface Parameters Display when RS-422 remote interface is selected.

All fields in the display except for the EXIT field provide status information only and are noneditable. If the Remote Interface Parameters display does not show the desired interface selection or the desired RS-422 word format selections, the unit must be opened and the configuration switches re-set to the correct positions (**paragraph G.4.2**).

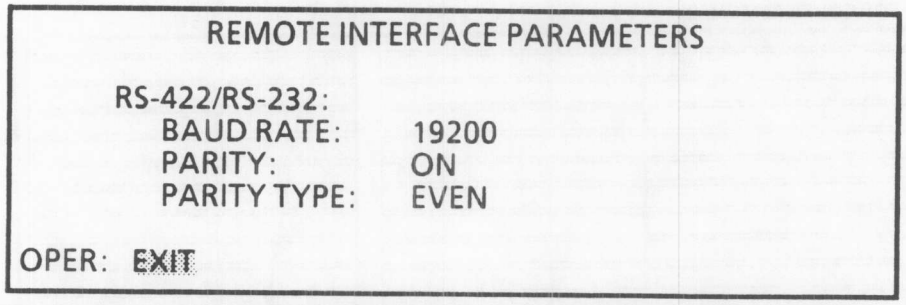

Figure G-4. Example of the Remote Interface Parameters Display (RS-422 Selected)

G.5.2 REMOTE OPERATIONS

The command mnemonic set used with the RS-422 Remote Interface option is identical to the existing IEEE-488 commands given in **Section II** of the base manual. The following paragraphs provide details of the RS-422 interface and its communications protocol.

G.5.2.1 RS-422 Interface

The RS-422 interface is implemented on a subminiature male, 25-pin, D-type connector (see **Figure G-2**). The RS-422 interface has a full duplex differential operation implemented on the 422 TXD (transmit data) and 422 RXD (receive data) lines. This interface supports a single drop environment.

The Digital FDM Demultiplexer supports a software communications protocol only. Data word format is fixed and comprised of the following:

- One start bit
- An 8 bit character
- One stop bit

Baud rate is selectable from 50 to 38.4k baud.

Courtesy of http://BlackRadios.terryo.org

G.5.2.2 RS-422 Communications Protocol

The communications protocol implements both ENQ/ACK (ENQuire/ACKnowledge) and XON, XOFF (ctl Q, ctl S). The ENQ/ACK format allows the user to send an ENQ character when an acknowledge is required. The Digital FDM Demultiplexer then responds with the ACK/NAK character indicating the validity of the data received in the input buffer and the fact that the Demultiplexer has completed processing all current data thru the last received terminator. The XON, XOFF format is supported by both the transmitting and the receiving. This allows transmission based on the availability of buffer space.

G.5.2.2.1 XON/XOFF Protocol

The XON/XOFF communications protocol is always active in the Demultiplexer. In the event the input buffer has no room for more than 16 additional characters the Demultiplexer will output an XOFF command. When the Demultiplexer empties its input buffer, it issues an XON. The user must stop sending data within 15 characters after receiving the XOFF character. On each character that is received while the buffer is full, the Demultiplexer issues an XOFF. The user may start sending data to the Demultiplexer after receiving the XON character.

The Demultiplexer responds to the XON and XOFF commands while outputting data to the user. If the Demultiplexer receives an XOFF while sending, it stops transmitting within two characters. The Demultiplexer will not transmit any further data until an XON is received. The Demultiplexer assumes the XON condition at power-up.

G.5.2.2.2 ENQ/ACK Protocol

When the ENQ character is sent to the Digital FDM Demultiplexer, it responds to a valid message with an ACK, or to an invalid message with a NAK. An invalid message is indicated on a communications error such as, framing, noise or overrun. The transmission of a NAK indicates that one or more of the bytes received after the last ENQ had a communications error. The ACK/NAK response is only sent after the Demultiplexer has completed processing any previous messages in the input buffer and output any response necessary.

The Demultiplexer internally maintains a communications error flag. The flag is cleared on power up or the transmission of a NAK. The flag is set when a byte is received with a communications error. Upon receiving an ENQ character, the Demultiplexer responds with an ACK/NAK based on the condition of the communications flag, after any pending input and output operations are complete.

G.5.2.2.3 Terminator

The input buffer is processed on the receipt of a LF character. The Digital FDM Demultiplexer outputs messages terminated with CR, LF.

G.5.2.2.4 Device Clear

Receipt of the DCL (Device Clear) command causes the Digital FDM Demultiplexer to clear both input and output buffers of any data. This command is not buffered and is acted upon as soon as it is received.

Courtesy of http://BlackRadios.terryo.org

G.5.2.2.5 **Service Request (SRQ)**

The Digital FDM Demultiplexer may send a one byte control character (ESC) indicating a service request, followed by an 8-bit binary encoded status byte if enabled. The SRQ byte (ESC) indicates to the user that a requesting event has occurred. The Demultiplexer status byte immediately follows the SRQ byte (ESC). This byte identifies the reason for requesting service. The encoding of this byte matches that of the *STB response.

The SRQ sequence either proceeds or follows the output of data string being transmitted from the output buffer. It does not interrupt the data string. The SRQ sequence may be enabled or disabled with the *SRE command.

G.5.2.2.6 **Buffer Handling**

The Digital FDM Demultiplexer RS-422 interface handles buffers in circular fashion to allow full duplex operation of the serial I/O.

G.5.2.2.6.1 ***Input Buffer***

The input buffer is handled in circular fashion allowing the simultaneous inputting and processing of data. The input buffer accepts up to 1024 bytes before overflowing. As data in the buffer is being processed additional inputs may come into the Demultiplexer. Upon receiving a terminator character, the Demultiplexer processes any previous messages in the buffer. When the buffer has less than 16 unused bytes, XOFF is generated. XON is generated when the buffer is no longer full (two messages removed or empty).

The input buffer processing starts on the receipt of a terminator. If the communications error flag is set, the buffer contents from the end of the last processed message thru the terminator is discarded. In the event the buffer is overrun, its contents are discarded. Messages such as XON, XOFF, ENQ and DCL have immediate actions. These commands are processed on receipt and not buffered. All other incoming data is buffered and processed in the order which it was received.

G.5.2.2.6.2 ***Output Buffer***

The output buffer is handled in a circular fashion allowing simultaneous additions and outputting. The transmission of XON/XOFF has priority over data in the output buffer awaiting transmission. The ACK/NAK and SRQ transmission are buffered operations so they stay in time synchronization with query operations. The output buffer holds up to 1024 bytes of data.

Courtesy of http://BlackRadios.terryo.org

G.5.2.2.7 **Supported Communications Control Commands**

Table G-1 lists the supported communications control commands for the RS-422 operation.

Table G-1. Supported RS-422 Communications Control Commands

HEX	ASCII	Rx	Tx	Function
11	DC1	x	x	XON, allow data transmission
13	DC3	x	x	XOFF, disallow data transmission
05	ENQ	x		Enquire, request acknowledge
06	ACK		x	Acknowledged, data received okay
15	NAK		x	Not acknowledged, data communications error
0A	LF	x	x	Line feed, start processing input buffer
0D	CR	x	x	Carriage return, no action
14	DC4	x		DCL, clear input and output buffers
1B	ESC		x	Service Request character, always directly followed by status byte.

G.6 REFERENCE DESIGNATION PREFIX

The use of partial reference designations are used on the equipment and on the manual illustrations. This partial reference designation consists of the component type letter(s) and the identifying component number. The complete reference designation may be obtained by placing the proper prefix before the partial reference designation. Reference designation prefixes are included on the drawings and illustrations in the figure titles (in parenthesis).

G.7 LIST OF MANUFACTURERS

No additional manufacturers are required for the parts covered in this appendix, compared to those that are used for the base unit. See the base manual for a complete list of manufacturers, including those associated with the replacement parts listed in this appendix.

G.8 PARTS LIST

The following parts lists contain all the electrical components used in this option, along with mechanical parts which may be subject to unusual wear or damage. For a comprehensive listing of all parts and a list of manufacturers, refer also to the base manual. When ordering replacement parts from the Watkins-Johnson Company, specify the unit type, the serial number, and the option configuration. Also include the reference designation and the description of each item ordered. The list of manufacturers, provided in **paragraph G.7**, and the manufacturer's part number, provided in **paragraph G.9**, are supplied as a guide to aid the user of the equipment while in the field. The parts listed may not necessarily be identical with the parts installed in the unit. The parts listed in **paragraph G.9** will provide for satisfactory unit operation.

Courtesy of http://BlackRadios.terryo.org

Replacement parts may be obtained from any manufacturer provided that the physical characteristics and electrical parameters of the replacement item are compatible with the original part. In the case where components are defined by a military or industrial specification, a vendor which can provide the necessary component is suggested as a convenience to the user.

NOTE

As improvements in semiconductors are made, it is the policy of Watkins-Johnson to incorporate them in proprietary products. As a result, some transistors, diodes and integrated circuits which are installed in the unit may not agree with the parts lists or schematic diagrams of this manual. However, substitution of the semiconductor devices listed in this manual may be substituted with satisfactory results.

Courtesy of http://BlackRadios.terryo.org

G.9 WJ-9547/422 AND WJ-9548/422 REMOTE INTERFACE OPTION

REF DESIG	DESCRIPTION	QTY PER ASSY	MANUFACTURER'S PART NO.	MFR. CODE	RECM VENDOR
	Revision D1				
A43	Remote Control Interface PC Assembly (9547/422)	1	797138-2	14632	
OR					
A43	Remote Control Interface PC Assembly (9548/422)	1	797138-1	14632	
W1	Cable Assembly	1	383434-1	14632	
1	ID Plate, RS-422 Option	1	283176-1	14632	
2	Screw Lock Kit	1	205817-1	00779	

Courtesy of http://BlackRadios.terryo.org

G.9.1 TYPE 797138-1 AND -2 REMOTE CONTROL INTERFACE PC ASSEMBLY

REF DESIG PREFIX A43

REF DESIG	DESCRIPTION	QTY PER ASSY	MANUFACTURER'S PART NO.	MFR. CODE	RECM VENDOR
	Revision B1				
C1	Capacitor, Ceramic: .033 µF, 10%, 50 V	35	841415-022	14632	
C2 Thru C20	Same as C1				
C22	Capacitor, Tantalum: 15 µF, 20%, 10 V	1	841293-18	14632	
C23	Same as C1				
C24	Capacitor, Tantalum: 1.0 µF, 20%, 16 V	2	841293-04	14632	
C25	Same as C24				
C26	Same as C1				
C27	Same as C1				
C28	Capacitor, Ceramic: 22 pF, 5%, 50 V, NPO	2	841415-003	14632	
C29	Same as C28				
C30 Thru C39	Same as C1				
C40	Not Used				
C41	Not Used				
C42 Thru C45	Same as C1				
C46	Not Used				
C47	Not Used				
C48	Same as C1				
CR1	Dual Switching Diode	1	MMBD7000LT1	04713	
R1	Resistor, Fixed: 10 kΩ, 5%, .1 W	4	841414-097	14632	
R2	Resistor, Fixed: 220Ω, 5%, .1 W	1	841414-057	14632	
R3	Resistor, Fixed: 100 kΩ, 5%, .1 W	51	841414-121	14632	
R4	Same as R3				
R5	Same as R3				
R6	Same as R1				
R7 Thru R19	Same as R3				
R20	Resistor, Fixed: 10 MΩ, 5%, .1 W	1	841414-169	14632	
R21 Thru R28	Same as R3				
R29	Same as R1				
R30	Same as R1				
R31 Thru R50	Same as R3				
R51	Not Used				
R52	Not Used				

Courtesy of http://BlackRadios.terryo.org

REF DESIG PREFIX A43

REF DESIG	DESCRIPTION	QTY PER ASSY	MANUFACTURER'S PART NO.	MFR. CODE	RECM VENDOR
R53 Thru R57	Same as R3				
R58	Not Used				
R59	Same as R3				
R60	Same as R3				
S1	Switch	5	ADP05	95146	
S2 Thru S5	Same as S1				
U1	Integrated Circuit, RAM	2	IDT71342LA-70J	61772	
U2	Integrated Circuit, Decoder/DMUX	2	74AC139 SO16	34371	
U3	Integrated Circuit, Quad 2-Input OR Gate	2	74AC32 SO14	34371	
U4	Integrated Circuit, Dual D-Type Flip Flop	2	74HC74 SO14	04713	
U5	Integrated Circuit, Buffer/Line Driver	6	74HC365 SO16	07029	
U6	Integrated Circuit, Hex Inverter	1	74AC04 SO14	04713	
U7	Same as U2				
U8	Integrated Circuit, Decoder/DMUX	1	74AC138 SO16	34371	
U9	Same as U5				
U10	Same as U3				
U11	Integrated Circuit, Microcontroller Unit, 16-Bit	1	MC68HC11A0FN	04713	
U12	Integrated Circuit, Octal D-Type Trans. Latch	1	74HC573 SOL20	18722	
U13	Same as U1				
U14	Same as U4				
U15	Same as U5				
U16	Integrated Circuit, GPIB Interface	1	TMS9914AFNL	01295	
U17	Same as U5				
U18	Integrated Circuit, Transceiver	2	74HC245 SOL20	04713	
U19	Same as U18				
U20	Same as U5				
U21	Same as U5				
U22	Integrated Circuit, Buffer/Line Driver	1	74HC125 SO14	34371	
U23	Integrated Circuit, 2-Input AND Gate	1	74HC08 SO14	02735	
U24	Integrated Circuit, Intfc., Transceiver, Bus Cntl.	1	SN75ALS160DW	01295	
U25	Integrated Circuit, Line Driver/Rcvr	1	SN75ALS161DW	01295	
U28	Integrated Circuit	1	SN75155D	01295	
U29	Integrated Circuit, EPROM Programmed (9548/422)	1	841707	14632	
OR					
U29	Integrated Circuit, EPROM Programmed (9547/422)	1	841764	14632	
U30	Integrated Circuit, Static RAM	1	HM62256LFP-12SLT	9J979	
U31	Integrated Circuit, Quad 2-Input NAND Gate	1	74AC00 SO14	02735	

Courtesy of http://BlackRadios.terryo.org

REF DESIG PREFIX **A43**

REF DESIG	DESCRIPTION	QTY PER ASSY	MANUFACTURER'S PART NO.	MFR. CODE	RECM VENDOR
U32	Not In Circuit				
U33	Integrated Circuit, EPROM Programmed (9548/422)	1	841708	14632	
OR					
U33	Integrated Circuit, EPROM Programmed (9547/422)	1	841765	14632	
U34	Not Used				
U35	Integrated Circuit, UART	1	SCC2691AC1A28	18324	
U36	Integrated Circuit, Diff. Drvr/Rcvr	1	SN75179BD	01295	
U37	Integrated Circuit	1	8675176AD	01295	
U38	Same as U22				
XU11	Socket	1	213-052-601	26742	
XU29	Socket, Receptacle PC MT	4	SL-114-G-11	55342	
XU33	Same as XU29				
Y1	Crystal, Quartz: CF = 7.3728 MHz	1	FPX073-20	61429	

Courtesy of http://BlackRadios.terryo.org

Courtesy of http://BlackRadios.terryo.org

NOTES:
1. UNLESS OTHERWISE SPECIFIED:
   A) RESISTANCE IS IN OHMS, ±5%, 1/10W.
   B) CAPACITANCE IS IN µF.

⚠ SEE TABULATION FOR DIFFERENCES BETWEEN TYPE NUMBERS.

TYPE	U29(EPROM)			U33(EPROM)			USED ON
	SCD NO.	PART NO.	ORG.	SCD NO.	PART NO.	ORG.	
797138-1	841903	27C256	64K X 8	841904	27C256	64K X 8	WJ-9548/422
797138-2	841905	27C256	64K X 8	841906	27C256	64K X 8	WJ-9547/422

Figure G-5. Type 797138-1 and -2, Remote Control Interface PC Assembly, A43, Schematic Diagram 581558 (Sheet 1 of 2) (C)

Courtesy of http://BlackRadios.terryo.org

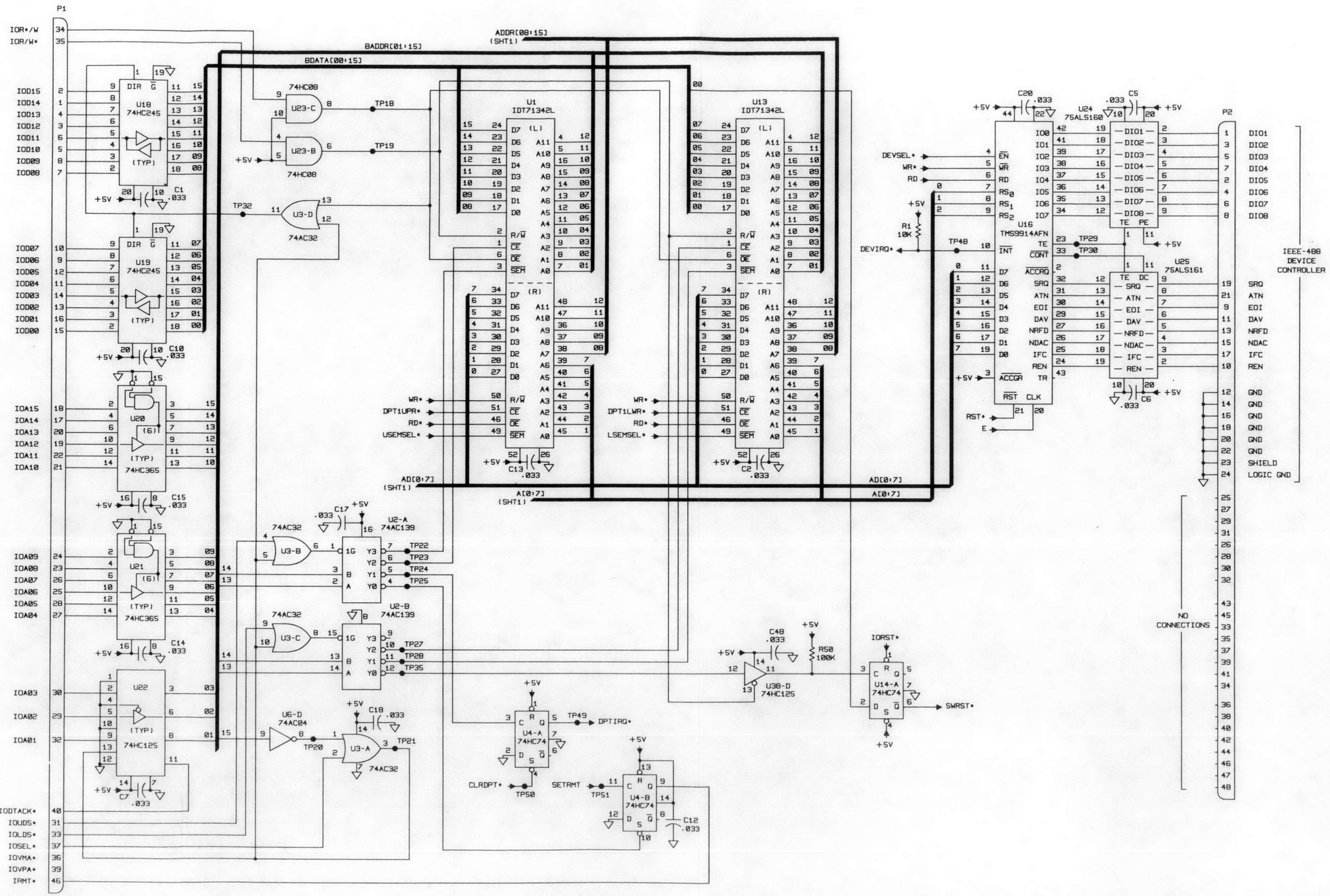

Figure G-5. Type 797138-1 and -2, Remote Control Interface PC Assembly, A43, Schematic Diagram 581558 (Sheet 2 of 2) (C)