Courtesy of http://BlackRadios.terryo.org

INSTRUCTION MANUAL

FOR

TYPE WJ-8618B(S1) VHF/UHF RECEIVER

WATKINS-JOHNSON

Courtesy of http://BlackRadios.terryo.org

WATKINS–JOHNSON COMPANY

Courtesy of http://BlackRadios.terryo.org

INSTRUCTION MANUAL

FOR

TYPE WJ-8618B(S1) VHF/UHF RECEIVER

WATKINS-JOHNSON COMPANY
700 QUINCE ORCHARD ROAD
GAITHERSBURG, MARYLAND 20878

December 1988

Courtesy of http://BlackRadios.terryo.org

WARNING

This equipment utilizes voltages which are potentially dangerous and may be fatal if contacted. Exercise extreme caution when working with the equipment with any protective covers removed.

PROPRIETARY STATEMENT

This document and subject matter disclosed herein are proprietary items to which Watkins-Johnson Company retains the exclusive right of dissemination, reproduction, manufacture and sale.

This document is provided to the individual or using organization for their use alone in the direct support of the associated equipment unless permission for further disclosure is expressly granted in writing.

Courtesy of http://BlackRadios.terryo.org

WJ-861XB Receivers that are used with the WJ-8976 3-Channel DF System require a modified version of the Type WJ-861XB/FE (Frequency Extender). Two modified versions of the Frequency Extender are available for use with the 3-Channel DF System. The 861XB/FEDF extends the receiver tuning from 500 MHz to 1100 MHz. The 861XB/FEDX extends the receiver tuning from 500 MHz to 1200 MHz.

The following paragraphs describe the differences between the various Frequency Extender options that are available for use with the WJ-8976 3-Channel DF System.

The Type WJ-861XB/FEDF permits the receiver tuning range to be expanded from 500 MHz to 1100 MHz. The FEDF version also includes the Type 796403-2 LO Control (A12). The Type 796403-2 LO Control module allows the selection of either the receiver UHF LO or an external UHF LO. LO Control module Type 796403-2 is used to select the UHF LO source.

This module allows the receiver UHF LO to be applied out rear panel connector J30 for use by an external device or allows an external UHF LO to be applied to connector J30 for use by the receiver. This capability allows one UHF LO to be used for the purposes of locking the LOs of several devices together. Locking the LOs together provides an increase in phase accuracy.

The WJ-861XB/FEXDF Frequency Extender is a modified version of the WJ-861XB/FEX (Frequency Extender), allowing the tuning range to be extended to 1200 MHz, instead of 1100 MHz as with the WJ-861XB/FE and WJ-861XB/FEDF. As with the WJ-861XB/FEDF, the WJ-861XB/FEDX includes the Type 796403-2 LO Control assembly (A12). The Type 796403-2 LO Control module allows the selection of either the receiver UHF LO or an external UHF LO. LO Control module Type 796403-2 is used to select the UHF LO source.

This module allows the receiver UHF LO to be applied out rear panel connector J30 for use by an external device or allows an external UHF LO to be used by the receiver. This capability allows the use of one UHF LO for the purposes of locking the LOs of several devices together. Locking the LOs provides increased phase accuracy for the Direction Finding System (DF).

Table 1 lists the differences between the various versions of the Frequency Extender options that are available.

Courtesy of http://BlackRadios.terryo.org

Courtesy of http://BlackRadios.terryo.org

Table 1. Frequency Extender Versions

Version	Modules	Types	Description
861XB/FE 861XB/FEDF	A3A1	796414-1	UHF Preselector
	A3A2	796415-1	UHF Preamplifier/Mixer
	A3A22	798079-2	UHF LO Synthesizer
	*A12	796403-2	LO Control
861XB/FEX 861XB/FEDX	A3A1	796414-3	UHF Preselector
	A3A2	796415-3	UHF Preamplifier/Mixer
	A3A22	798079-2	UHF LO Synthesizer
	*A12	796403-2	LO Control

NOTE: * Used with the WJ-8976 3-Channel DF System with the FEDF and FEDFX Frequency Extenders.

To provide the additional tuning range, the Type 796414-3 UHF Preselector (A3A1) and the Type 796415-3 UHF Preamplifier/Mixer (A3A2) have replaced the standard Type 796414-1 UHF Preselector and the Type 796415-1 UHF Preamplifier/Mixer.

Filter FL3, on the UHF Preselector (A3A1), and filter FL1, on the UHF Preamplifier/Mixer (A3A2), have been replaced to provide an upper rolloff frequency of 1200 MHz, instead of 1100 MHz.

Refer to the Installation procedure in the WJ-861XB/FE Option Appendix for the steps necessary to install the Frequency Extender Option.

Courtesy of http://BlackRadios.terryo.org

Courtesy of http://BlackRadios.terryo.org

TABLE OF CONTENTS

SECTION I

GENERAL DESCRIPTION

Paragraph		Page
1.1	Electrical Characteristics	1-1
1.2	Mechanical Characteristics	1-1
1.3	Equipment Supplied	1-2
1.4	Equipment Required But Not Supplied	1-2

SECTION II

INSTALLATION AND OPERATION

Paragraph		Page
2.1	Unpacking and Inspection	2-1
2.2	Installation	2-1
2.2.1	Connector Signals	2-4
2.2.1.1	Line Cord Receptacle and Voltage Selector Fuse Block	2-4
2.2.1.2	Antenna #1 Input ANT 1	2-4
2.2.1.3	Antenna #2 Input ANT 2	2-4
2.2.1.4	SW IF OUT J1	2-4
2.2.1.5	FM MON J2	2-4
2.2.1.6	Audio J3	2-4
2.2.1.7	SW Video OUT J4	2-4
2.2.1.8	SCAN OUT J5	2-4
2.2.1.9	X OUT J6	2-4
2.2.1.10	Y OUT J7	2-5
2.2.1.11	Z OUT J22	2-5
2.2.1.12	1 MHz REF J8	2-5
2.2.1.13	WB IF OUT J20	2-5
2.2.1.14	COR J21	2-5
2.2.1.15	Remote Control	2-5
2.2.1.16	Phones A7J1	2-5
2.2.1.17	Optional Tuning A6J1	2-5
2.3	Equipment Malfunctions	2-5
2.4	Operation	2-6
2.4.1	Controls and Indicators	2-6
2.4.1.1	Push ON/OFF Power	2-6
2.4.1.2	DETECT MODE	2-9
2.4.1.3	BANDWIDTH	2-9
2.4.1.4	AFC	2-9
2.4.1.5	AGC	2-10
2.4.1.6	COR LEVEL	2-10

Courtesy of http://BlackRadios.terryo.org

SECTION II

INSTALLATION AND OPERATION (Continued)

Paragraph		Page
2.4.1.7	MEMORY SELECT	2-10
2.4.1.8	TUNING RATE	2-10
2.4.1.9	TUNING KNOB	2-11
2.4.1.10	DISABLE	2-11
2.4.1.11	ANT 2	2-11
2.4.1.12	STO	2-11
2.4.1.13	MAN	2-11
2.4.1.14	REM	2-11
2.4.1.15	RCL	2-12
2.4.1.16	EXC	2-12
2.4.1.17	CLR	2-12
2.4.1.18	SCAN	2-12
2.4.1.19	STEP	2-12
2.4.1.20	FUNCTION (F↑)	2-12
2.4.1.20.1	Extended Tuning Range	2-13
2.4.1.20.2	Troubleshooting	2-13
2.4.1.20.3	Displayed Decimal Code	2-13
2.4.1.21	DWELL	2-14
2.4.1.22	AUDIO GAIN	2-14
2.4.1.23	LINE AUDIO	2-14
2.4.1.24	RF/IF GAIN	2-14
2.4.1.25	LOCK-OUT	2-15
2.4.1.26	MSTR/SLAVE	2-15
2.4.1.27	INTENSITY	2-15
2.4.1.28	FOCUS	2-15
2.4.1.29	SWEEP RATE	2-15
2.4.1.30	SWEEP WIDTH	2-15
2.4.1.31	CENTER FREQ	2-15
2.4.1.32	GAIN	2-15
2.4.1.33	MARKER	2-15
2.4.1.34	LIN/LOG	2-15
2.4.1.35	DIGITAL DISPLAY	2-16
2.4.2	Local Operation	2-16
2.4.2.1	Manual Control	2-16
2.4.2.2	Memory Programming	2-16
2.4.2.3	Scan Mode	2-18
2.4.2.3.1	Scan Continue	2-20
2.4.2.3.2	Scan Lock-Out	2-21
2.4.2.3.3	Lock-Out Channel Recall and Deletion	2-22
2.4.2.4	Step Mode	2-23
2.4.2.4.1	Step Continue	2-24
2.4.2.5	Master/Slave Operation (Optional)	2-25
2.4.2.5.1	Configuring the Receiver for Master/Slave Operation	2-26
2.4.2.5.2	Entering and Exiting Master/Slave Operation	2-26
2.4.2.5.3	Configuration Variances in Master/Slave Operation	2-28
2.4.2.5.4	Special Operating Considerations in Master/Slave Mode	2-28

Courtesy of http://BlackRadios.terryo.org

SECTION II

INSTALLATION AND OPERATION (Continued)

Paragraph		Page
2.4.2.6	Cursor	2-28C
2.4.2.7	Digital Audio/Video Gain	2-28D
2.4.2.8	Single Sideband Operation	2-29
2.4.2.9	Error Codes	2-30
2.5	Remote Operating Characteristics	2-32
2.5.1	Device Dependent Commands	2-36
2.5.2	Examples of Remote Operation	2-45
2.6	Preparation for Reshipment	2-51

SECTION III

CIRCUIT DESCRIPTION

Paragraph	Page	
3.1	General	3-1
3.2	Digital Control Section	3-1
3.2.1	Functional Description	3-1
3.2.2	Detailed Circuit Description	3-2
3.2.2.1	Type 796353-X Microprocessor (A5A3)	3-2
3.2.2.2	Type 794108-X Receiver Interface (A5A1)	3-4
3.2.2.3	Type 796321-1 Synthesizer Interface (A5A2)	3-6
3.2.2.4	Type 794190-3 Front Panel Display and Control (A6)	3-8
3.3	RF/IF Section	3-13
3.3.1	Functional Description	3-13
3.3.2	Detailed Circuit Description	3-15
3.3.2.1	Type 794128-1 Antenna Switch (A8)	3-15
3.3.2.2	Type 794189-2 RF/IF Motherboard (A3)	3-16
3.3.2.3	Type 794094-1 VHF High-Band Preselector (A3A3)	3-17
3.3.2.4	Type 794095-1 VHF Low-Band Preselector (A3A4)	3-19
3.3.2.5	Type 794097-2 Preamplifier (A3A5)	3-20
3.3.2.6	Type 796493-1 1st Converter (A3A6)	3-21
3.3.2.7	Type 716003-3 2nd Converter (A3A7)	3-21
3.3.2.8	Type 784002-1 AGC Amplifier (A3A8)	3-23
3.3.2.9	Type 798074-1 SSB Bypass (A3A14)	3-25
3.3.2.10	Type 796233-1 Audio/Video/COR (A3A15)	3-25
3.3.2.11	Type 724016-1 AM Demodulator (A3A16)	3-28
3.4	Synthesizer Section	3-30
3.4.1	Functional Description	3-30

Courtesy of http://BlackRadios.terryo.org

SECTION IV

MAINTENANCE

Paragraph		Page
4.1	General	4-1
4.2	Cleaning and Lubrication	4-1
4.3	Inspection for Damage or Wear	4-1
4.4	Test Equipment Required	4-1
4.5	Troubleshooting Procedures and Fault Isolation	4-1
4.6	Performance Tests	4-5
4.6.1	Power Supply Regulator Test	4-6
4.6.2	RF/IF Section Performance Tests	4-7
4.6.2.1	IF Amplifier Performance Tests	4-7
4.6.2.2	FM Demodulator Performance Test	4-8
4.6.2.3	AGC Amplifier Performance Tests	4-9
4.6.2.3.1	Bandwidth Selection	4-10
4.6.2.4	AM Demodulator Performance Tests	4-11
4.6.2.4.1	IF Output	4-11
4.6.2.5	Audio/Video/COR Performance Tests	4-13
4.6.2.5.1	Video Output	4-13
4.6.2.5.2	COR Operation	4-15
4.6.2.6	2nd Converter Performance Tests	4-16
4.6.2.7	1st Converter Performance Tests	4-18
4.6.2.8	VHF Preamplifier Performance Tests	4-19
4.6.2.9	VHF Preselector Performance Checks	4-20
4.6.2.10	Antenna Switch Performance Test	4-22
4.6.3	Digital Control Section Performance Tests	4-24
4.6.3.1	Microprocessor Performance Tests	4-24
4.6.3.2	Receiver Interface Performance Tests	4-25
4.6.3.3	Synthesizer Interface Performance Tests	4-26
4.6.4	Synthesizer Section Performance Tests	4-29
4.6.4.1	Reference Generator Performance Tests	4-29
4.6.4.2	1st LO Synthesizer Performance Tests	4-30
4.6.4.3	2nd LO Synthesizer Performance Tests	4-31
4.6.4.3.1	535 MHz Generator Performance Tests	4-31
4.6.4.3.2	4.4-5.4 MHz Synthesizer Performance Tests	4-32
4.6.4.3.3	Translation Oscillator Performance Tests	4-33
4.6.4.4	SSB BFO Performance Test	4-33
4.7	Alignment Procedures	4-34
4.7.1	RF/IF Section Alignment Procedures	4-34
4.7.1.1	VHF High-Band Preselector (A3A3) Alignment	4-34
4.7.1.2	VHF Low-Band Preselector (A3A4) Alignment	4-38
4.7.1.3	VHF Preamplifier (A3A5) Alignment	4-40
4.7.1.4	1st Converter (A3A6) Alignment	4-42
4.7.1.5	2nd Converter (A3A7) Alignment	4-44
4.7.1.6	AM Demodulator (A3A16) Alignment	4-46
4.7.1.7	AGC Amplifier (A3A8) Alignment	4-49
4.7.1.8	Audio/Video/COR (A3A15) Alignment	4-50
4.7.2	Synthesizer Section Alignment Procedures	4-52

Courtesy of http://BlackRadios.terryo.org

SECTION IV

MAINTENANCE (Continued)

Paragraph		Page
4.7.2.1	Reference Generator (A4A1) Alignment	4-52
4.7.2.2	1st LO Synthesizer (A4A2) Alignment	4-52
4.7.2.3	535 MHz Generator (A4A6) Alignment	4-52
4.7.2.4	4.4-5.4 MHz Synthesizer (A4A4) Alignment	4-53
4.7.2.5	Translation Oscillator (A4A3) Alignment	4-54
4.7.2.6	SSB BFO (A4A5) Alignment	4-55
4.7.3	Digital Section Alignment Procedures	4-57
4.7.3.1	Display Intensity Adjustment	4-57
4.7.3.2	Power Fail Adjustment	4-57

SECTION V

REPLACEMENT PARTS LIST

Paragraph		Page
5.1	Unit Numbering Method	5-1
5.2	Reference Designation Prefix	5-1
5.3	List of Manufacturers	5-1
5.4	Parts List	5-5
5.5	Type WJ-8618B(S1), VHF/UHF Receiver (Main Chassis)	5-7
5.5.1	Type 764005-1 Power Distribution (A1)	5-15
5.5.2	Type 794189-2 RF/IF Motherboard (A3)	5-17
5.5.2.1	Type 794094-1 VHF High-Band Preselector (A3A3)	5-21
5.5.2.2	Type 794095-1 VHF Low-Band Preselector (A3A4)	5-25
5.5.2.3	Type 794097-2 Preamplifier (A3A5)	5-29
5.5.2.3.1	Part 370285-1 500 MHz LP Filter (A3A5A1)	5-31
5.5.2.4	Type 796493-1 1st Converter (A3A6)	5-32
5.5.2.4.1	Part 380385-1 Converter Chassis (A3A6A1)	5-33
5.5.2.4.1.1	Part 281017-1 Mixer/IF Assembly (A3A6A1A1)	5-35
5.5.2.5	Type 716003-3 2nd Converter (A3A7)	5-37
5.5.2.5.1	Part 370396-2 LO Amplifier Assembly (A3A7A1)	5-39
5.5.2.5.1.1	Part 270082-2 LO Amplifier Board (A3A7A1A1)	5-40
5.5.2.6	Type 784002-1 AGC Amplifier (A3A8)	5-42
5.5.2.7	Type 798074-1 SSB Bypass Assembly (A3A14)	5-45
5.5.2.8	Type 796223-1 Audio/Video/COR (A3A15)	5-46
5.5.2.9	Type 724016-1 AM Demodulator/IF Output Amplifier (A3A16)	5-50
5.5.3	Type 798071-1 Synthesizer Motherboard (A4)	5-55
5.5.3.1	Type 798028-2 Reference Generator (A4A1)	5-58
5.5.3.2	Type 778001-2 1st LO Synthesizer (A4A2)	5-61
5.5.3.2.1	Part 390361-1 1st LO Synthesizer VCO (A4A2A1)	5-66
5.5.3.2.1.1	Part 390360-1 VCO (A4A2A1A1)	5-67
5.5.3.2.1.2	Part 290433-1 Buffer (A4A2A1A2)	5-69
5.5.3.2.1.3	Part 290434-1 Prescaler (A4A2A1A3)	5-70
5.5.3.2.2	Part 290443-1 Diode Control (A4A2A2)	5-71

Courtesy of http://BlackRadios.terryo.org

SECTION V

REPLACEMENT PARTS LIST (Continued)

Paragraph		Page
5.5.3.3	Type 778002-1 Translation Oscillator (A4A3)	5-73
5.5.3.3.1	Part 290557-1 VCO/Buffer (A4A3A1)	5-74
5.5.3.3.2	Part 290536-1 4.4-5.4 MHz Amplifier (A4A3A2)	5-76
5.5.3.3.3	Part 290450-1 Phase Detector (A4A3A3)	5-77
5.5.3.4	Type 776002-1 4.4-5.4 MHz Synthesizer Assembly (A4A4)	5-78
5.5.3.4.1	Part 290454-1 352-432 MHz VCO and Divide-by-80 Assembly (A4A4A1)	5-80
5.5.3.4.2	Part 290455-1 Prescaler Assembly (A4A4A2)	5-81
5.5.3.4.3	Part 380374-1 Divider and Phase Comparator (A4A4A3)	5-83
5.5.3.5	Type 794195-1 SSB BFO (A4A5)	5-85
5.5.3.6	Type 798043-1 535 MHz Generator (A4A6)	5-89
5.5.3.6.1	Part 290325-1 535 MHz Generator (A4A6A1)	5-91
5.5.3.6.2	Part 290557-2 VCO/Buffer (A4A6A2)	5-92
5.5.4	Type 798039-7 Digital Motherboard (A5)	5-95
5.5.4.1	Type 794108-X Receiver Interface (A5A1)	5-97
5.5.4.2	Type 796321-1 Synthesizer Interface (A5A2)	5-99
5.5.4.3	Type 796353-X Microprocessor (A5A3)	5-103
5.5.5	Type 794190-2 Front Panel Display and Control (A6)	5-105
5.5.6	Type 794141-1 Phone Jack Assembly (A7)	5-107
5.5.7	Type 794128l-1 Antenna Switch (A8)	5-108
5.5.7.1	Part 270450-1 RF Switch (A8A1)	5-110
5.5.7.2	Part 270451-1 Switch Driver (A8A2)	5-111

LIST OF TABLES

SECTION I

Table		Page
1-1	WJ-8618B(S1) VHF/UHF Receiver, Specifications	1-3

SECTION II

Table		Page
2-1	Synthesizer Interface Switch Configurations	2-2
2-2	Table of Connectors	2-3
2-3	Table of Controls and Indicators	2-7
2-4	IF Bandwidth Decimal Code	2-14
2-5	Table of Scan Increments	2-18
2-6	Mnemonocs and Binary Codes	2-34
2-7	WJ-8618B(S1) Configuration Commands and Responses	2-36
2-8	WJ-8618B(S1) Bandwidth Commands and Responses	2-38
2-9	WJ-8618B(S1) Detection Commands and Responses	2-38
2-10	WJ-8618B(S1) Miscellaneous Control Commands and Responses	2-39
2-11	WJ-8618B(S1) Receiver Mode Control Commands and Responses	2-41
2-12	WJ-8618B(S1) Signal Information Commands and Responses	2-42

Courtesy of http://BlackRadios.terryo.org

LIST OF TABLES

SECTION II (Continued)

Table		Page
2-13	WJ-8618B(S1) Optional Commands and Responses	2-43
2-14	Sending a Tuned Frequency of 25 MHz to the WJ-8618B(S1) Using an HP85 (WJ-8618B(S1) Device #6)	2-45
2-15	Sending a COR "OFF" Command	2-46
2-16	Sending a Frequency Request	2-47
2-17	Sending a Bandwidth Size Request	2-48
2-18	Sending a Detection Mode Request	2-49
2-19	Sending a COR Level Request	2-50

SECTION III

Table		Page
3-1	VHF Preselector Switching Sequence Table	3-17

SECTION IV

Table		Page
4-1	Test Equipment Required	4-2
4-2	WJ-8618B(S1) Troubleshooting Table	4-3
4-3	Receiver Standard Test Setting	4-5
4-4	Power Supply Voltages	4-6
4-5	IF Bandwidth Switching Logic	4-11
4-6	RF Preselector Passband	4-22
4-7	Microprocessor Control Signals	4-25
4-8A	Receiver Standard Bandwidth Selection Codes	4-25
4-8B	Receiver Dual Bandwidth Selection Codes	4-26
4-9	Receiver Detection Mode Selection Codes	4-26
4-10	1st LO Synthesizer Control Words	4-27
4-11	2nd LO Synthesizer Control Words (100 kHz and 10 kHz)	4-27
4-12	2nd LO Synthesizer Control Words (1 kHz and 100 Hz)	4-28
4-13	RF Preselector and UHF VCO Control	4-29
4-14	1st LO Synthesizer Frequency Versus Tuned Frequency	4-31
4-15	4.4-5.4 MHz Synthesizer Output Frequency Versus Tuned Frequency	4-32
4-16	2nd LO Frequency Versus Tuned Frequency	4-33
4-17	VHF High-Band Preselector Alignment Data	4-35
4-18	VHF Low-Band Preselector Alignment Data	4-38

LIST OF ILLUSTRATIONS

SECTION I

Figure		Page
1-1	WJ-8618B(S1) Receiver	1-0

Courtesy of http://BlackRadios.terryo.org

LIST OF ILLUSTRATIONS (Continued)

SECTION II

Figure		Page
2-1	WJ-8618B(S1) VHF/UHF Receiver Rear PanelConnectors	2-3
2-2	WJ-8618B(S1) VHF/UHF Receiver Front Panel Controls and Indicators	2-6
2-2A	Selecting Bandwidth Slots in Master/Slave Mode	2-28A
2-3	Configuration of IEE-488 Data Bus	2-32

SECTION III

Figure		Page
3-1	Digital Control Section, Functional Block Diagram	3-0
3-2	Encoder Assembly Timing Diagram	3-7
3-3	RF/IF Section, Functional Block Diagram (Sheet 1 of 2)	3-10
3-3	RF/IF Section, Functional Block Diagram (Sheet 2 of 2)	3-11
3-4	Preselector Effects on Intermodulation	3-18
3-5	Synthesizer Section, Functional Block Diagram	3-31

SECTION IV

Figure		Page
4-1	IF Amplifier Performance Test, Equipment Connections	4-7
4-2	FM Demodulator Performance Test, Equipment Connections	4-8
4-3	AM Demodulator Performance Test, Equipment Connections	4-12
4-4	Audio/Video/COR Performance Test, Equipment Connections	4-13
4-5	COR Circuit Test, Equipment Connections	4-15
4-6	2nd Converter Performance Test, Equipment Connections	4-16
4-7	1st Converter Performance Test, Equipment Connections	4-18
4-8	VHF Preamplifier Performance Test, Equipment Connections	4-20
4-9	VHF Preselector Performance Test, Equipment Connections	4-21
4-10	Antenna Switch Performance Test, Equipment Connections	4-23
4-11	VHF Preselector Alignment, Equipment Connections	4-35
4-12A	382-500 MHz Preselector, Typical Response	4-36
4-12B	292-382 MHz Preselector, Typical Response	4-36
4-12C	187-292 MHz Preselector, Typical Response	4-37
4-12D	120-187 MHz Preselector, Typical Response	4-37
4-13A	75-120 MHz Preselector, Typical Response	4-38
4-13B	47-75 MHz Preselector, Typical Response	4-39
4-13C	30-47MHz Preselector, Typical Response	4-39
4-13D	20-30MHz Preselector, Typical Response	4-40
4-14	VHF Preamplifier Alignment, Equipment Connections	4-40
4-15	Type 370285 500 MHz LP Filter, Typical Response	4-42
4-16	1st Converter Alignment, Equipment Connections	4-43
4-17	1st Converter Alignment, Typical Response	4-43
4-18	2nd Converter Alignment, Equipment Connections	4-45
4-19	2nd Converter Alignment, Typical Response	4-45
4-20	AM Demodulator Alignment, Equipment Connections	4-46

Courtesy of http://BlackRadios.terryo.org

LIST OF ILLUSTRATIONS

SECTION IV (Continued)

Figure		Page
4-21	AM Demodulator Wideband Alignment, Typical Response	4-48
4-22	AM Demodulator Narrow-Band Alignment, Typical Response	4-48
4-23	Audio/Video/COR Alignment, Equipment Connections	4-51
4-24	SSB BFO Alignment, Equipment Connections	4-56

SECTION V

Figure		Page
5-1	WJ-8618B(S1) Receiver, Front View, Location of Components	5-6
5-2	WJ-8618B(S1) Receiver, Rear View, Location of Components	5-6
5-3	WJ-8618B(S1)) Receiver, Top View, Location of Components	5-8
5-4	WJ-8618B(S1) Receiver, Bottom View, Location of Components	5-10
5-5	Type 764005-1 Power Distribution (A1), Location of Components	5-15
5-6	Type 794189 RF/IF Motherboard (A3), Location of Components	5-16
5-7	Type 794094-1 VHF High-Band Preselector (A3A3), Location of Components	5-21
5-8	Type 794095-1 VHF Low-Band Preselector (A3A4), Location of Components	5-25
5-9	Type 794097-2 Preamplifier (A3A5), and Type 370285-1 500 MHz LP Filter (A3A5A1), Top Views, Location of Components	5-29
5-10	Type 794097-2 Preamplifier (A3A5), Location of Components	5-29
5-11	Type 796493-1 1st Converter (A3A6), Location of Components	5-32
5-12	Type 796493-1 1st Converter (A3A6), and Part 380835-1 1st Converter Chassis (A3A6A1), Top View, Location of Components	5-33
5-13	Part 281017-1 Mixer/IF Assembly (A3A6A1A1), Location of Components	5-35
5-14	Type 716003-3 2nd Converter (A3A7), Part 370396-2 LO Amplifier Assembly (A3A7A1), and Part 270082-2 LO Amplifier Board (A3A7A1A1)	5-36
5-15	Type 716003-3 2nd Converter (A3A7), Location of Components	5-36
5-16	Part 270082-2 LO Amplifier Board (A3A7A1A1), Location of Components	5-39
5-17	Type 784002-1 AGC Amplifier (A3A8), Location of Components	5-41
5-18	Type 798074-1 SSB Bypass Assembly (A3A14), Location of Components	5-45
5-19	Type 796233-1 Audio/Video/COR (A3A15), Location of Components	5-46
5-20	Type 724016-1 AM Demodulator/IF Output Amplifier (A3A16), Location of Components	5-49
5-21	Type 798071 Synthesizer Motherboard (A4), Location of Components	5-56
5-22	Type 798028-2 Reference Generator (A4A1), Location of Components	5-58

Courtesy of http://BlackRadios.terryo.org

LIST OF ILLUSTRATIONS

SECTION V (Continued)

Figure		Page
5-23	Type 778001-2 1st LO Synthesizer (A4A2), Top View, Location of Components	5-62
5-24	Type 778001-2 1st LO Synthesizer (A4A2), Location of Components	5-62
5-25	Part 390361-1 1st LO Synthesizer VCO, (A4A2A1), Top View, Location of Components	5-65
5-26	Part 390361-1 1st LO Synthesizer VCO, (A4A2A1), Bottom View, Location of Components	5-65
5-27	Part 390360-1 1st LO Synthesizer VCO, (A4A2A1A1), Location of Components	5-67
5-28	Part 290433-1 Buffer (A4A2A1A2), Location of Components	5-69
5-29	Part 290434-1 Prescaler (A4A2A1A3), Location of Components	5-70
5-30	Part 290443-1 Diode Control (A4A2A2), Location of Components	5-71
5-31	Type 778002-1 Translation Oscillator (A4A3), Top View, Location of Components	5-72
5-32	Part 290557-1 VCO/Buffer (A4A3A1), Location of Components	5-74
5-33	Part 290536-1 4.4-5.4 MHz Amplifier (A4A3A2), Location of Components	5-76
5-34	Part 290450-1 Phase Detector (A4A3A3), Location of Components	5-77
5-35	Type 776002-1 4.4-5.4 MHz Synthesizer Assembly (A4A4), Top View, Location of Components	5-78
5-36	Part 290454-1 353-432 MHz VCO and Divide-by-80 Assembly (A4A4A1), Location of Components	5-79
5-37	Part 290455-1 Prescaler Assembly (A4A4A2), Location of Components	5-81
5-38	Part 380374-1 Divider and Phase Comparator (A4A4A3), Location of Components	5-82
5-39	Type 794195-1 SSB BFO (A4A5), Location of Components	5-86
5-40	Type 798043-1 535 MHz Generator (A4A6), Right Side View, Location of Components	5-88
5-41	Type 798043-1 535 MHz Generator (A4A6), Left Side View, Location of Components	5-88
5-42	Part 290325-1 535 MHz Generator (A4A6A1), Location of Components	5-90
5-43	Part 390557-2 VCO/Buffer (A4A6A2), Location of Components	5-92
5-44	Type 798039-7 Digital Motherboard (A5), Location of Components	5-94
5-45	Type 794108-X Receiver Interface (A5A1), Location of Components	5-96
5-46	Type 796321-1 Synthesizer Interface (A5A2), Location of Components	5-100
5-47	Type 796353-X Microprocessor (A5A3), Location of Components	5-102
5-48	Type 794190-2 Front Panel Display and Control (A6), Location of Components	5-105
5-49	Type 724128-1 Antenna Switch (A8), Top View, Location of Components	5-108
5-50	Part 270450-1 RF Switch (A3A1), (Top Side), Location of Components	5-109
5-51	Part 270450-1 RF Switch (A8A1), (Bottom Side), Location of Components	5-109
5-52	Part 270451-1 Switch Driver (A8A2), Location of Components	5-111

Courtesy of http://BlackRadios.terryo.org

LIST OF ILLUSTRATIONS

SECTION IV (Continued)

Figure		Page
6-1	Type 794189-2 RF/IF Motherboard (A3), Schematic Diagram 490193 (Sheet 1 of 2)	6-1
6-1	Type 794189-2 RF/IF Motherboard (A3), Schematic Diagram 490193 (Sheet 2 of 2)	6-3
6-2	Type 794094-1 VHF High-Band Preselector (A3A3), Schematic Diagram 570057	6-5
6-3	Type 794095-1 VHF Low-Band Preselector (A3A4), Schematic Diagram 570058	6-7
6-4	Type 794097-2 Preamplifier (A3A5), Schematic Diagram 480445	6-9
6-5	Type 796493-1 1st Converter (A3A6), Schematic Diagram 480715	6-11
6-6	Type 716003-3 2nd Converter (A3A7), Schematic Diagram 580100	6-13
6-7	Type 784002-1 AGC Amplifier (A3A8), Schematic Diagram 590099	6-15
6-8	Type 798074-1 SSB Bypass (A3A14), Schematic Diagram 290508	6-17
6-9	Type 796233-1 Audio/Video/COR (A3A15), Schematic Diagram 480343	6-19
6-10	Type 724016-1 AM Demodulator/IF Output Amplifier (A3A16), Schematic Diagram 570157	6-21
6-11	Type 798071-1 Synthesizer Motherboard (A4), Schematic Diagram 590143	6-23
6-12	Type 798028-2 Reference Generator (A4A1), Schematic Diagram 590096	6-25
6-13	Type 778001-1 1st LO Synthesizer (A4A2), Schematic Diagram 590138 (Sheet 1 of 2)	6-27
6-13	Type 778001-1 1st LO Synthesizer (A4A2), Schematic Diagram 590138 (Sheet 2 of 2)	6-29
6-14	Type 390361-1 1st LO Synthesizer (A4A2A1), Schematic Diagram 590139	6-31
6-15	Type 778002-1 Translation Oscillator (A4A3), Schematic Diagram 490248	6-33
6-16	Part 290557-1 VCO Buffer (A4A3A1), Schematic Diagram 490314	6-35
6-17	Part 290536-1 4.4-5.4 MHz Amplifier (A4A3A2), Schematic Diagram 390472	6-37
6-18	Type 776002-1, 4.4-5.4 MHz Synthesizer (A4A4), Schematic Diagram 480366	6-39
6-19	Part 290454-1 352-432 MHz VCO and Divide-by-80 (A4A4A1), Schematic Diagram 490273	6-41
6-20	Part 290455-1 Prescaler Assembly (A4A4A2), Schematic Diagram 490265	6-43
6-21	Part 380374-1 Divider and Phase Comparator (A4A4A3), Schematic Diagram 580138	6-45

Courtesy of http://BlackRadios.terryo.org

LIST OF ILLUSTRATIONS

SECTION IV (Continued)

Figure		Page
6-22	Type 794195-1 SSB BFO (A4A5), Schematic Diagram 470311	6-47
6-23	Type 798043-1 535 MHz Generator (A4A6), Schematic Diagram 490192	6-49
6-24	Part 290557-2 VCO Buffer (A4A6A2), Schematic Diagram 490314	6-51
6-25	Type 798039-13 Digital I/O Motherboard (A5), Schematic Diagram 480515 (Sheet 1 of 2)	6-53
6-25	Type 798039-13 Digital I/O Motherboard (A5), Schematic Diagram 480515 (Sheet 2 of 2)	6-55
6-26	Type 794108-X Receiver Interface (A5A1), Schematic Diagram 570075 (Sheet 1 of 2)	6-57
6-26	Type 794108-X Receiver Interface (A5A1) Schematic Diagram 570075 (Sheet 2 of 2)	6-59
6-27	Type 796321-1 Synthesizer Interface (A5A2), Schematic Diagram 580212	6-61
6-28	Type 796353-X Microprocessor (A5A3), Schematic Diagram 580249	6-63
6-29	Type 794190-1 Front Panel Display and Control (A6), Schematic Diagram 570097	6-65
6-30	Type 794141-1 Phone Jack (A7), Schematic Diagram 170170	6-67
6-31	Type 794128-1 Antenna Switch (A8), Schematic Diagram 470188	6-69
6-32	Type WJ-8618B(S1) VHF/UHF Receiver, Main Chassis Schematic Diagram 680088	6-71

Courtesy of http://BlackRadios.terryo.org

SECTION I

GENERAL DESCRIPTION

Courtesy of http://BlackRadios.terryo.org

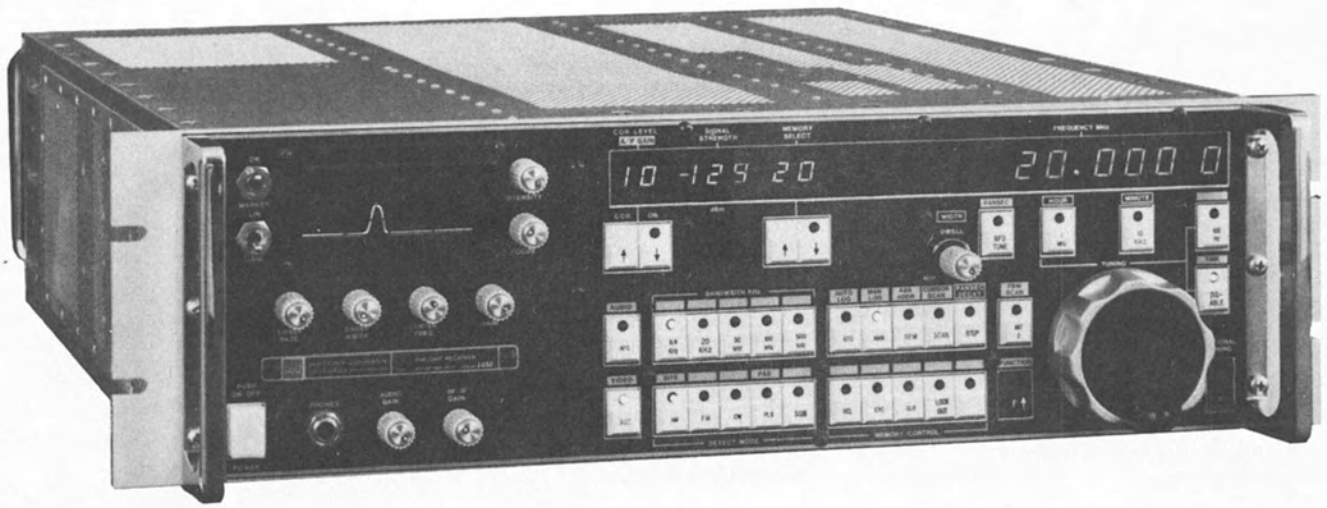

Figure 1-1. WJ-8618B(S1) Receiver

Courtesy of http://BlackRadios.terryo.org

SECTION I

GENERAL DESCRIPTION

1.1 ELECTRICAL CHARACTERISTICS

The WJ-8618B(S1) VHF/UHF Receiver is a fully synthesized, digitally controlled receiver, designed to operate in the VHF/UHF frequency range. It receives AM, FM and PULSE emissions over a frequency range of 20 to 500 MHz. The standard receiver is capable of manual operation, utilizing the front panel controls and automatic operation, utilizing the built-in microprocessor and 96 channel memory. Remote control capabilities can also be incorporated, utilizing an optional IEEE-488 bus or RS-232 interface. During the manual operating mode, all receiver functions are controlled by the front panel controls. The operating parameters are selected by depressing the appropriate front panel pushbutton. When depressed, an illuminated LED on the button indicates the selection.

A built-in memory provides 96 operator-programmable memory channels in the Manual and Step modes or 48 programmable frequency search bands in the Scan mode. The memory controls all receiver functions including Tuned Frequency, Antenna Selection, IF Bandwidth, Detection Mode, COR level, AGC ON/OFF and AFC ON/OFF. In the manual mode, the operator has full control of all receiver functions. In the Step mode, the built-in microprocessor directs the receiver to step to each frequency stored in the memory channels in search of signal activity. In the scan mode, the microprocessor directs the receiver to search the operator-programmed bands for signal activity.

Internal frequency tuning circuitry of the WJ-8618B(S1) receiver includes the 1st and 2nd LO Synthesizers. The synthesizers determine the tuned frequency to a resolution of 100 Hz. A tuning knob on the front panel and three tuning rate pushbuttons provide tuning capability. Tuning can be performed in 1 MHz, 10 kHz or 100 Hz steps by selecting the appropriate tuning rate button. Pressing the Disable button locks the receiver to the selected frequency and disables the tuning knob preventing accidental frequency changes.

Ease of maintenance and flexibility is provided by the modular design concept. Nearly all functional modules plug directly into the motherboards and the connections are accessible from the bottom of the receiver, with the bottom panel removed.

1.2 MECHANICAL CHARACTERISTICS

The receiver mounts in a standard 19-inch equipment rack, occupies 5.25 inches of vertical space and extends 19.9 inches into the rack. The main chassis top, bottom, front, rear and internal compartment panels are constructed of aluminum. Except for the Line Audio control, which mounts on the rear panel, all operating controls are mounted on the front panel, while all input and output cables (except for the phones jack and optional tuning connector) connect to the rear panel.

A black bezel, etched with control markings, is mounted to the front panel. The pushbuttons, display LEDs, dwell control and optional tuning connector all mount on a printed circuit board, positioned behind the front panel, and extend through cutouts in the front panel and bezel. All other controls (except for the ON/OFF Power Button) mount to the front panel. The power ON/OFF button mounts to the chassis and extends through the front panel and bezel.

Courtesy of http://BlackRadios.terryo.org

The rear panel mounts all input and output connectors, except for the phones jack and optional tuning connector, mentioned above. N-type connectors provide the ANT 1 and ANT 2 inputs and a TNC connector is provided for the switched IF OUTPUT. All other connectors are BNC type. The REF SEL switch for selecting an internal or external timebase is mounted immediately above the 1-MHz reference input/output connector. Line Audio control, R3, which controls the rear panel audio output is mounted on the rear panel alongside of the audio output connector. Two rear mounted fuse holders are provided. The rectangular holder mounts the operational line fuse while the circular holder is used to house the alternate line voltage fuse. Also mounted on the rear panel are four heat sinked voltage regulators (for +15 V, -15 V and +5 V) and two rectifiers (for +9 V unregulated).

The top cover is held in place using quarter-turn fasteners. Loosening these fasteners permit removal of the top cover, exposing the five main compartments. The Power Distribution circuit, Signal Monitor assembly compartment, RF/IF modules, Digital I/O modules and Synthesizer modules are in separate compartments for mechanical support and shielding purposes. Removal of the top cover permits access to all of the plug-in modules.

Removal of the bottom cover, held in place by quarter-turn fasteners, exposes the Wideband IF Amplifier and the three motherboards that mount the plug-in modules. All connections to the motherboards are made with push-on plugs so that replacement of a motherboard consists of removal of mounting screws and the plugs.

1.3 EQUIPMENT SUPPLIED

The equipment supplied consists of the receiver, detachable line cord, and subassembly extender cards.

1.4 EQUIPMENT REQUIRED BUT NOT SUPPLIED

To obtain full use of the receiver, equipment from the following list should be selected.

1. Two antennas, 50-ohm

2. Audio monitoring equipment

   speaker panel, 600-ohm
   headphones set, 600-ohm
   tape recorder

3. Suitable controller, with IEEE-488 option, for remote control operation

4. Computer terminal and/or line printer, with RS-232 option, for remote-control operation

Courtesy of http://BlackRadios.terryo.org

Table 1-1. WJ-8618B(S1) VHF/UHF Receiver, Specifications

Frequency Range	
WJ-8618B(S1)	20-500 MHz
WJ-8618B(S1) (with FE option)	20-1100 MHz
Detection Modes	AM, FM, CW and Pulse standard; Variable BFO and SSB optional (other modes are available on special order)
Tuning Scheme	Frequency synthesized local oscillators locked to internal reference
Reference Accuracy	1 part in 10^{-7} or external 1 MHz reference input
Tuning Resolution	100 Hz
Synthesizer Tuning Speed	3 msec typical, 10 msec maximum
Input Impedance	50Ω
Input VSWR	2.5:1 Typical 3.0:1 Maximum
Noise Figure	9.5 dB typical, 11 dB maximum
Third Order Intercept Point	+8 dBm typical +3 dBm minimum (20-500 MHz) 0 dBm typical, -5 dBm minimum (500-1100 MHz)
Second Order Intercept Point	+50 dBm, minimum
Ultimate FM S+N/N	40 dBm minimum in 50 kHz BW
Oscillator Phase Noise (20 kHz from the carrier)	-105 dBc typical
Preselection	Automatically switched, suboctave (1.66:1) band-pass filters
LO Radiation	-100 dBm typical
Image Rejection	90 dB minimum
IF Rejection	90 dB minimum
Internal Spurious	Equivalent to -115 dBm maximum at the RF input
Reciprocal Mixing	With an input signal at a rated sensitivity level; an out-of-band signal removed 350 kHz in the 20 Hz IF bandwidth at a level of 70 dB above rated sensitivity will not degrade the desired output signal ratio (S+N)/N by more than 3 dB
IF Bandwidths	5 IF Bandwidths (To be selected from **Table 1**) Note: 5th IF BW position must be 500 kHz or greater
IF Shape Factor	See **Table 1**
Final IF	21.4 MHz, -30 dBm Nominal Output Level
AM Stability	6 dB maximum from AGC threshold to a level 100 dB above AGC threshold (maximum input -5 dBm)
Switched Video Output	1 volt peak-to-peak; nominal, into 91 ohm load for FM with peak frequency deviation at 30% of the IF Bandwidth and AM with 50% modulation. DC coupled for FM and AM
FM Monitor	DC coupled FM output, 1 volt peak-to-peak minimum, into 91 ohm load

Courtesy of http://BlackRadios.terryo.org

Table 1-1. WJ-8618B(S1) VHF/UHF Receiver, Specifications (Continued)

Table 1. Available Bandwidths and Rated Sensitivity

Bandwidth (kHz)	Max. Shape Factor 3:60 dB	Sensitivity (dBm)*
6	3:1	-105
10	3:1	-104
20	3:1	-101
50	3:1	-97
75	3:1	-95
100	3:1	-94
250	4:1	-90
300	4:1	-89
500	4:1	-87
1000	4:1	-84
2000	4:1	-81
4000	4:1	-78
8000	4:1	-75

3.2 kHz, 6.4 kHz, 15 kHz, 30 kHz and 40 kHz also available on special order.

*Sensitivity Conditions:

AM - Input AM modulated 50% by a 1 kHz tone, will produce a minimum video output (S + N)/N ratio of 10 dB.

FM - Input signal FM modulated at a 1 kHz rate with a peak deviation equal to 30% of the selected IF BW, will produce a minimum video output (S + N)/N ratio of 17 dB. (Note: A 400 Hz modulation rate is required for the 10 kHz IF BW.)

Video Amplifier Frequency Response . . .	DC to ≈ 1/2 IF Bandwidth for FM Monitor; DC to ≈ 1/2 IF Bandwidth for AM/FM switched video output
Line Audio Output	10 mW, minimum, into 600 ohms for 50% AM or FM peak frequency deviation equivalent to 30% of the IF bandwidth
Audio Amplifier Distortion	2.5% typical, 3% maximum
COR/Squelch	Adjustable threshold from noise level to approximately 40 dB above noise. COR provides 100 mA current "sink-to-ground" for switching; +24 Vdc maximum external voltage (external current limiting must be provided)

Courtesy of http://BlackRadios.terryo.org

Table 1-1. WJ-8618B(S1) VHF/UHF Receiver, Specifications (Continued)

Signal Monitor (Optional)	
Sweep Width	0-4 MHz continuously adjustable
Resolution	10 kHz
Sweep Rate	Adjustable to 15-25 Hz
Marker	Center frequency (locked to receiver frequency standard)
Display	Lin/Log
CR	1 x 3 inches nominal dimensions
PAN	Provides pan display during SCAN mode with optional digitally refreshed display (DRD)
Temperature Range:	
Operating	0°C to 50°C
Non-Operating	-20°C to 80°C
Power Requirement	110, 120/220, 240 Vac, 47-400 Hz, 100 watts nominal
Dimensions	19-inch rack mount, 18 inch depth, excluding connectors and handles, and 5.25 inch panel height
Weight	50 pounds, approximately

Courtesy of http://BlackRadios.terryo.org

Courtesy of http://BlackRadios.terryo.org

SECTION II

INSTALLATION AND OPERATION

Courtesy of http://BlackRadios.terryo.org

Courtesy of http://BlackRadios.terryo.org

SECTION II

INSTALLATION AND OPERATION

2.1 UNPACKING AND INSPECTION

Examine the shipping carton for damage before the equipment is unpacked. If the carton's exterior appears to be damaged, try to have the carrier's agent present when the equipment is unpacked. If this is not possible, retain all packing material and shipping containers for the carrier's inspection if damage to the equipment is evident after it has been unpacked. Also, verify that the equipment is complete as listed on the packing slip. Contact the Watkins-Johnson Company or your Watkins-Johnson representative for any discrepancies or shortages.

2.2 INSTALLATION

The receiver is designed for mounting in a standard 19-inch equipment rack. It occupies 5.25 inches of vertical rack space and extends approximately 19.5 inches into the rack to the tips of the rear protective handles. Do not rely solely on front panel mountings to support the receiver. The use of Jonathan Type QD110 slides, mounted to the sides of the receiver, is preferred and acceptance mounting holes are provided. The rack environment should allow for a free flow of air through the top and bottom covers and the side panels, as well as around the outer surfaces of the receiver. A 1.75 inch space above and below the unit is recommended for rack mount configuration, along with forced air convection. Refer to **Figure 2-4,** WJ-8618B(S1) VHF/UHF Receiver Outline Drawing, for the critical dimensions of the unit.

Prior to installing the receiver at its final location, DIP switch S1 on the Synthesizer Interface (A5A2) should be inspected for proper switch configuration. This switch is located at the upper edge of the Synthesizer Interface subassembly and is accessible by removing the top cover of the receiver. The switch settings listed in **Table 2-1** are used to configure the receiver software to automatically switch between the ANT1 and ANT2 inputs at specific frequencies and to recognize the installation of the FE Options (2 to 500 MHz or 500 to 1100 MHz). Refer to **Table 2-1** as a guide to setting this switch.

Access to the rear panel should be allowed so that input and output connections can be made or changed conveniently, if desired.

The front and rear panel connections are described in **Table 2-2.** As a reference for the panel connectors, see **Figure 2-1.**

NOTE

Before power is applied to the unit be sure the selected line voltage for the receiver matches the line voltage being used.

Courtesy of http://BlackRadios.terryo.org

Table 2-1. Synthesizer Interface Switch Configurations

S1 switch settings are listed below:

Switch S1 on A5A2 6	5	4	3	2	1	Function Selected
1	-	-	-	-	-	Selects Variable Tuning Resolution (from 100 Hz to 10 MHz)
0	-	-	-	-	-	Selects Normal Tuning Resolution (100 Hz, 10 kHz, 1 MHz only)
-	1	-	-	-	-	Selects Dual IF Amplifiers (up to 10 IF bandwidths)
-	0	-	-	-	-	Selects Single IF Amplifiers (up to 5 IF bandwidths)
-	-	*	-	-	-	Spare (for future expansion)
-	-	-	*	-	-	Spare (for future expansion)
-	-	-	-	1	-	Enables SSB Option
-	-	-	-	0	-	Disables SSB Option
-	-	-	-	-	1	Frequency Extender Option Installed
-	-	-	-	-	0	Frequency Extender Option Not Installed

S2 switch settings are listed below:

Switch S2 on A5A2 8	7	6	5	4	3	2	1	Function Selected
*	-	-	-	-	-	-	-	Spare (for future expansion)
-	1	-	-	-	-	-	-	Pre-dwell Selected
-	0	-	-	-	-	-	-	Post-dwell Selected
-	-	1	-	-	-	-	-	NRT Disabled
-	-	0	-	-	-	-	-	NRT Enabled
-	-	-	*	-	-	-	-	Spare (for future expansion)
-	-	-	-	*	-	-	-	Spare (for future expansion)
-	-	-	-	-	1	-	-	LOG 40 dB LOG Scale Selected
-	-	-	-	-	0	-	-	LOG 60 dB LOG Scale Selected
-	-	-	-	-	-	*	-	Spare (for future expansion)
-	-	-	-	-	-	-	*	Spare (for future expansion)

NOTE: 1 = OPEN
0 = CLOSED
* = NOT USED

Courtesy of http://BlackRadios.terryo.org

Table 2-2. Table of Connectors

Connector		Function
ANT 1	ANTENNA INPUT	(Type-N) RF Input From #1 Antenna
ANT 2	ANTENNA INPUT	(Type-N) RF Input From #2 Antenna
J1	SW IF OUT	(TNC) Selected Bandwidth IF Output (50 ohms)
J2	FM MON	(BNC) FM Monitor Output (91 ohms)
J3	AUDIO	(BNC) Audio Output (600 ohms)
J4	SW VIDEO OUT	(BNC) AM/FM Video Output (91 ohms)
J5	SCAN OUT	(BNC) Scan Output
J6	X OUT	(BNC) SM Display Output
J7	Y OUT	(BNC) SM Display Output
J22	Z OUT	(BNC) 8 μsec blanking pulse for external display
J8	1 MHz REF	(BNC) 1 MHz Reference In/Out (50 ohms)
J20	WB IF OUT	(BNC) Wideband IF Output (50 ohms)
J21	COR	(BNC) Carrier Operated Relay
	AUX	Additional (BNC for future expansion
	REMOTE CONTROL	Remote Control Input/Output (optional)
A7J1	PHONES	Phone Output (Front Panel)
A6J1	OPTIONAL TUNING	Optional Tuning Input (Front Panel)
FL1J1	Line Cord Receptacle and Voltage Selector	Power Input

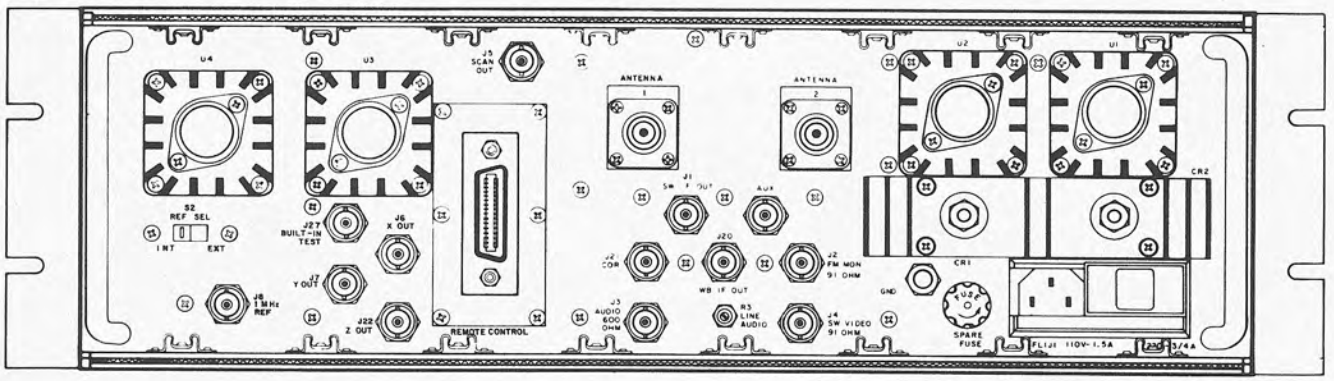

Figure 2-1. WJ-8618B(S1) VHF/UHF Receiver Rear Panel Connectors

Courtesy of http://BlackRadios.terryo.org

2.2.1 CONNECTOR SIGNALS

2.2.1.1 **Line Cord Receptacle and Voltage Selector Fuse Block** - This multi-functioned assembly should always be inspected before installing the receiver in a new location. With the line cord unplugged, the clear plastic window can be slid over the male power receptacle prongs. This exposes the line fuse and a hinged plastic fuse pull lever.

Swinging the lever to the left ejects the fuse from the holder and frees a line-voltage-select pc wafer, at the bottom of the assembly. Looking down on the pc wafer, at a slight angle, the selected line voltage for the receiver will show on the left side (either 100, 120, 220, 240 Vac). If the voltage shown does not match the available line voltage, remove the pc wafer and install it so that the closest line voltage is visible with the pc wafer in position. The pc wafer should be set in the voltage position closest to the line voltage being used. Then, install the fuse suitable for the line voltage: 1.5 ampere slow-blow for 100 Vac and 120 Vac or .75 ampere for 220 Vac and 240 Vac. Install the other fuse in the alternate fuse holder.

2.2.1.2 **Antenna #1 Input ANT 1** - This N-type connector provides the RF input signal from the #1 antenna. Nominal input impedance is 50 ohms.

2.2.1.3 **Antenna #2 Input ANT 2** - This N-type connector provides the RF input signal from the #2 antenna. Nominal input impedance is 50 ohms.

2.2.1.4 **SW IF OUT J1** - The switched IF output TNC connector supplies a -30 dBm IF signal into 50 ohms. The center frequency is 21.4 MHz with a bandwidth equal to the selected IF bandwidth.

2.2.1.5 **FM MON J2** - The FM Monitor BNC connector provides a DC coupled FM output. The level is 2 volt peak-to-peak minimum, into 91 ohms, for input signals with a peak deviation equal to the selected IF bandwidth.

2.2.1.6 **Audio J3** - This BNC connector provides a 600 ohms audio output. This output drives a 600 ohm load at a level adjustable to 10 mW minimum. The output level is controlled by the Line Audio Control R3.

2.2.1.7 **SW Video OUT J4** - This Switched Video Output BNC connector provides a 1 volt peak-to-peak, minimum, video signal into a 91 ohm load. The output is a DC coupled AM or FM video signal, determined by the operation mode chosen. The video output is configured at the factory to provide a negative-going output unless otherwise specified by the customer. The video output can be reconfigured to provide a positive-going output by resetting A3A15S1. Refer to **Figures 5-4** and **5-6** for subassembly location.

2.2.1.8 **SCAN OUT J5** - The Scan Output BNC connector provides a sinewave output that varies in frequency with the sweep.

2.2.1.9 **X OUT J6** - This BNC connector provides X axis signal monitor information to drive an external display.

Courtesy of http://BlackRadios.terryo.org

2.2.1.10 **Y OUT J7** - This BNC connector provides Y axis signal monitor information to drive an external display.

2.2.1.11 **Z OUT J22** - This BNC connector provides an 8 μsec blanking pulse to an external display to blank the display on retrace. A negative blanking pulse is standard and a positive pulse is optionally available.

2.2.1.12 **1 MHz REF J8** - With the REF SEL switch in the internal position, this BNC connector provides a 1 MHz output with a level of 100 mV rms into 50 ohms. In the external position, a 1 MHz reference signal must be applied to J8 to provide a time base for the receiver. The level of the external signal must be at least 4.5 V but less than 5 V, into 50 ohms.

2.2.1.13 **WB IF OUT J20** - The Wideband IF Output BNC connector provides a -30 dBm IF signal into 50 ohms. The center frequency is 21.4 MHz with a bandwidth of 4 MHz.

2.2.1.14 **COR J21** - The Carrier-Operated-Relay BNC connector provides a 100 mA current-sink to ground for control of external equipment. The maximum external voltage that can be applied is +24 Vdc.

2.2.1.15 **Remote Control** (optional) - The Remote Control multipin connector allows the receiver to interface with other equipment via an optional interface bus. This permits the receiver to be controlled from an external source, or it can be programmed to supply signals to other receivers.

2.2.1.16 **Phones A7J1** - The Phones Jack, mounted on the front panel, provides an audio signal of 10 mW, minimum, into 600 ohms. This signal is capable of driving a standard 600 ohm headphone set.

2.2.1.17 **Optional Tuning A6J1** - The optional tuning multipin connector, permits receiver control using an optional external keyboard.

2.3 EQUIPMENT MALFUNCTIONS

This unit was thoroughly inspected and factory adjusted for optimum performance prior to shipment. If any malfunctions are encountered after following the recommended installation procedures, verify that the correct input signals are present at the proper jacks. Maintenance and troubleshooting of the unit can be aided by using the procedures shown in **Section IV** of this manual. Contact with your Watkins-Johnson representative or the Watkins-Johnson Company, CET Division, Gaithersburg, Maryland should be made to prevent the possible voiding of the warranty prior to taking any corrective maintenance action.

Courtesy of http://BlackRadios.terryo.org

2.4 OPERATION

The WJ-8618B(S1) Receiver is capable of manual, semi-automatic and automatic operation in its standard configuration. This local operation is exercised using the front panel controls and indicators described in **paragraph 2.4.1.** Depression of a front panel pushbutton illuminates an LED on the button (refer to **Table 2-3**), indicating that particular function is active. Depressing any pushbutton in a group deactivates any previously selected button in that group. The CLR pushbutton activates a special three-step sequence, as described in **paragraph 2.4.1.17.** As a reference for front panel controls and indictors, see **Figure 2-2.**

In addition to the operating modes available in local operation, the WJ-8618B(S1) Receiver is capable of remote operation when the IEEE-488 (488) or RS-232 (232) interface option is incorporated in the receiver. Via the remote interface, all receiver operations can be controlled by an external controlling device, with the exception of signal monitor operation. Remote operation is described in **paragraph 2.5.**

2.4.1 CONTROLS AND INDICATORS

2.4.1.1 **Push ON/OFF Power** - This pushbutton applies power to the unit. When pushed the button remains partially depressed indicating the switch is energized. Depressing the button again causes the button to return to its fully extended OFF position.

On power up, the receiver is set to the operating mode and parameters that were present prior to the last power interruption. However, if the Scan mode was active when the receiver was last turned off, it returns to the beginning of the Scan sequence, rather than at the point where power was interrupted.

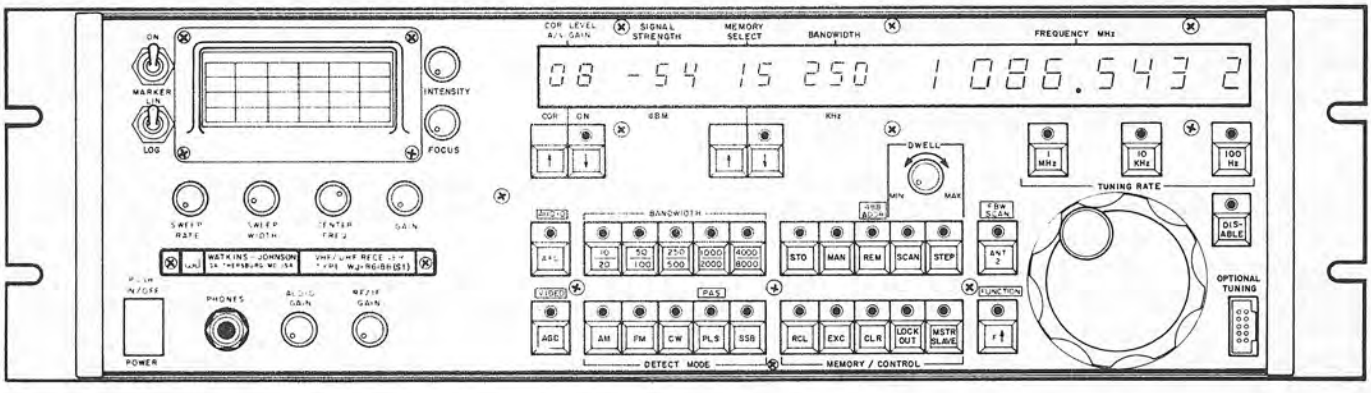

Figure 2-2. WJ-8618B(S1) VHF/UHF Receiver Front Panel Controls and Indicators

Courtesy of http://BlackRadios.terryo.org

Table 2-3. Table of Controls and Indicators

PUSH ON/OFF POWER	Applies to the receiver.
DETECT MODE:	
AM	Selects AM detection mode.
*BITE (Option)	Enables the built-in test function.
FM	Selects FM detection mode.
CW	Selects CW detection mode.
PLS	Selects PLS detection mode.
*PAS	Enables Programmable Antenna Selection.
SSB (Option)	Selects SSB detection mode.
BANDWIDTH	Selects the IF bandwidth.
AFC	Activates automatic frequency control.
AGC	Activates automatic gain control to the RF and IF amplifiers.
COR LEVEL UP/DOWN	Selects the level at which the COR function activates.
MEMORY SELECT UP/DOWN	Selects the desired memory channel.
TUNING RATE:	
1 MHz	Selects the 1 MHz tuning increment.
10 kHz	Selects the 10 kHz tuning increment or increases the tuning rate, up to 10 MHz, when Variable Tuning Resolution is enabled.
100 Hz	Selects the 100 Hz tuning increment or decreases tuning rate, down to 100 Hz when Variable Tuning Resolution is enabled.
TUNING KNOB	Controls the tuned frequency of the receiver or the Programmable Antenna Selection (PAS) frequency when enabled.
DISABLE	Locks receiver to the displayed frequency and disables tuning knob.
ANT 2	Selects RF input from Antenna 2.
*FBW SCAN	Provides full or half-bandwidth increments during Scan.
STO	Stores the selected receiver functions into the displayed memory channel.
MAN	Selects manual operation. Displays receiver type and software version when this pushbutton is held pressed in during receiver power up. A typical display for the WJ-8618B(S1) receiver would appear as: 8618B(S1) 3.X.X. (X designates current software level).
REM	Selects either the local or remote mode of operation.
*488 ADDR	Allows selection of receiver's IEEE address (0 to 30) and master/slave operation.
RCL	Recalls and displays information stored in active memory channel.

* Indicates uppercase function.

Courtesy of http://BlackRadios.terryo.org

Table 2-3. Table of Controls and Indicators (Continued)

EXC	Sets receiver in accordance with active memory channel.
CLR	Resets the receiver front panel and clears the memory.
SCAN	Scans operator programmed bands for signal activity.
STEP	Steps to each frequency stored in the memory channels in search of signal activity.
FUNCTION (F↑)	Selects the uppercase mode of the front panel pushbuttons. Enables the Test mode, when held in while tuning receiver power on.
DWELL	Sets the period spent at each frequency or band in the SCAN and STEP modes.
AUDIO GAIN	Controls the audio signal at the Phones Jack.
RF/IF GAIN	Manually controls the gain of the RF and IF amplifiers.
LOCK-OUT	Excludes operator programmed signals from a Scan.
MSTR/SLAVE (Option)	Designates the receiver as a master, sending data, or a slave, receiving data, via the remote interface bus. See **paragraph 2.4.2.5.**
INTENSITY (SM Option)	Controls the intensity of the Signal Monitor's CRT.
FOCUS (SM Option)	Provides focus of the trace on the CRT.
SWEEP RATE (SM Option)	Controls the rate at which the Signal Monitor sweeps the spectrum.
SWEEP WIDTH (SM Option)	Controls the width of the spectrum being viewed.
CENTER FREQ (SM Option	Controls the horizontal position of the IF band displayed.
GAIN (SM Option)	Controls the amplitude of the signal displayed on the CRT.
MARKER (SM Option)	Superimposes a 21.4 MHz reference marker on the IF signal displayed.
LIN/LOG (SM Option)	Selects either a linear or logarithmic vertical display.
DIGITAL DISPLAY	Displays digitally the COR Level Selected, Relative Signal Strength, Memory Channel selected and the Receiver Tuned Frequency.

Courtesy of http://BlackRadios.terryo.org

2.4.1.2 **DETECT MODE** - Depressing a button in the DETECT MODE group selects the desired receiver detection mode. An LED on the pushbutton illuminates indicating the active mode. The operator may select standard AM, FM, CW or PULSE modes. SSB is optionally available.

***BITE** (Optional) - Depressing the BITE pushbutton (uppercase AM) places the unit into a Built-In-Test Enabled mode. With BITE (Option L) installed, the Power Supply, Synthesizer Tuning, RF Signal/Noise, Quieting and COR/AGC are tested. This provides a thorough internal check of the receiver circuitry.

***PROGRAMMABLE ANTENNA SELECTION (PAS)** - Programmable Antenna Selection allows the operator to select the tuned frequency where the selected antenna switches. PAS is enabled via pressing the FUNCTION pushbutton and then pressing the PLS pushbutton. Pressing the FUNCTION pushbutton places the front panel in the uppercase mode of operation. In the uppercase mode of operation, the PLS button is used to select the Programmable Antenna Selection mode of operation. When in the uppercase mode, the LED on the FUNCTION pushbutton is illuminated. Pressing the PLS pushbutton illuminates the LED on the key. Pressing the PLS pushbutton toggles the PAS mode between on and off. When the PAS mode is enabled, "ON" is displayed to the left of the FREQUENCY display and the displayed frequency is the frequency at which the selected antenna switches. When the PAS mode is disabled, "OFF" is displayed to the left of the FREQUENCY display window and antenna selection must be performed manually by pressing the ANT 2 pushbutton to select the desired antenna.

With PAS enabled (ON), the tuning wheel is used to select the frequency (in 1 MHz steps) at which the selected antenna switches. Rotating the tuning wheel clockwise increases the antenna switching frequency, in 1 MHz increments. Counterclockwise rotation of the tuning wheel reduces the antenna switching frequency. After the PAS frequency has been set, pressing the FUNCTION pushbutton again returns the front panel to the normal operating mode. With PAS enabled, rotating the tuning wheel to frequencies less than the selected PAS frequency antenna 1 is selected. When the receiver is tuned to frequencies equal to or greater than the set PAS frequency, antenna 2 is selected.

2.4.1.3 **BANDWIDTH** - This group of pushbuttons permit the operator to select the desired IF bandwidth. An LED illuminates on the active pushbutton, indicating the IF bandwidth has been selected. Up to five IF Amplifiers and matched FM Demodulators can be installed in the receiver. Refer to **paragraph 5.5.2,** of the parts list, for a list of the available IF Amplifiers and FM Demodulators.

2.4.1.4 **AFC** - Depression of the AFC pushbutton switches the Automatic Frequency Control circuitry on (AFC LED illuminated) or off (AFC LED extinguished). When this function is enabled, it corrects for any frequency drift keeping the receiver locked on to the desired signal, as long as the signal strength is sufficient to exceed the programmed COR level. The AFC circuitry has a tracking range of ±10 times the selected IF Bandwidth.

*Indicates uppercase function.

Courtesy of http://BlackRadios.terryo.org

NOTE

1. If AFC is selected, the COR level should be set such that the COR LED is off when no signal is present. This prevents the AFC circuitry from hunting or attempting to correct the RF frequency, in the absence of a valid signal.

2. With two signals in close proximity, the AFC could lock on to the stronger signal. Therefore, when monitoring a low level signal, in the presence of stronger signals close in frequency to the desired signal, it is advisable to select AFC OFF.

2.4.1.5 **AGC** - Depressing the AGC pushbutton switches control of the RF/IF gain between Automatic Gain Control (AGC LED illuminated) and Manual Gain Control (AGC LED extinguished). When in the AGC mode, the RF/IF gain is automatically controlled by the internal AGC circuitry. In the Manual Gain Control mode, receiver RF/IF gain is set by rotating the front panel RF/IF Gain control. During a Scan, if AGC is selected as one of the programmed parameters, it is off during the Scan and the receiver is set at maximum gain. When a signal is detected and the receiver is set to the "Scan Continue" mode, the AGC is then activated to control receiver gain.

2.4.1.6 **COR LEVEL** - Two pushbuttons are provided to set the level at which the COR and squelch circuits activate. The COR level is adjustable from theoretical noise level to approximately 40 dB above noise. When the COR level is exceeded, both the COR and AUDIO circuits activate. An LED, on the down button, illuminates when the level is exceeded. With "00" displayed in the COR window, the COR level is set to minimum and the COR circuit is active at all times. A display of "--" indicates maximum level, keeping the COR circuit inactive at all signal levels. The COR Level also controls the activation of automatic frequency control when AFC is selected. This circuit prevents AFC from affecting the operation of the receiver until the signal level is above the set COR level. When AFC is selected, the COR Level should be increased until the COR LED extinguishes, with no signal present.

2.4.1.7 **MEMORY SELECT** - Two pushbuttons are provided to select the desired memory channel (00-95). Pressing the up button counts up through the memory channels while the down button counts down. Each memory channel stores all receiver information (COR LEVEL, RF/IF GAIN, AFC and AGC STATUS, ANTENNA, DETECT MODE, BANDWIDTH and TUNED FREQUENCY).

2.4.1.8 **TUNING RATE** Depressing one of the three tuning rate pushbuttons causes the tuned frequency to change in 1 MHz, 10 kHz or 100 Hz steps as the tuning knob is rotated.

Courtesy of http://BlackRadios.terryo.org

***VARIABLE TUNING RESOLUTION** - Setting position 6 of DIP switch S2 (located on Receiver Interface module A5A2) to the OPEN position, Variable Tuning Resolution is selected. With Variable Tuning Resolution selected, the tuning resolution is operator selectable from 100 Hz to 10 MHz. When Variable Tuning Resolution is selected, a flashing digit is displayed in the front panel frequency window. The position of the flashing digit is controlled by the left shift "←" and right shift "→" arrows. Each time the left shift pushbutton (10 kHz key) is pressed, the flashing digit is shifted one place to the left (up to 10 MHz). Shifting the tuning resolution to the left increases the tuning rate while decreasing the tuning resolution. Pressing the right shift pushbutton moves the flashing digit one place to the right (down to 100 Hz). Moving the tuning resolution to the right (100 Hz key) decreases the tuning rate and increases the tuning resolution.

2.4.1.9 **TUNING KNOB** - Rotation of this knob changes the receiver tuned frequency or the Programmable Antenna Selection frequency. The frequency changes at a rate determined by the tuning rate pushbuttons.

2.4.1.10 **DISABLE** - Depressing this button removes control of the tuned frequency by the tuning knob. The receiver remains locked at the last selected frequency. Depressing any tuner related pushbutton restores control to the tuning knob.

2.4.1.11 **ANT 2** - This pushbutton selects the RF input from either the ANT 1 or ANT 2 input connector. When the ANT 2 pushbutton LED is illuminated, ANT 2 is selected. When the LED is extinguished, ANT 1 is selected.

***FBW SCAN** - This pushbutton enables the Full Bandwidth Scan mode. When the LED is illuminated, full Bandwidth (FBW) Scan is selected, providing full bandwidth steps. When the LED is extinguished in uppercase operation, the Half Bandwidth Scan mode is selected.

2.4.1.12 **STO** - Depression of the STO pushbutton transfers the selected receiver functions into the active memory channel. The TUNED FREQUENCY, AFC, AGC, RF/IF GAIN, COR LEVEL, BANDWIDTH, DETECT MODE, ANTENNA selections and BFO FREQUENCY (optional) are stored simultaneously into the channel displayed in the Memory Select window. After the data is stored, the Memory Select display is incremented to the next higher memory channel.

2.4.1.13 **MAN** - The MAN pushbutton permits the return to the manual mode of operation from the Scan, Step or Memory Recall modes. When returning from Recall, a single depression of the MAN pushbutton returns the receiver to the Manual mode. When returning from the Scan or Step mode, a single depression places the receiver into the Scan or Step Continue modes respectively. A second depression places the receiver into the Manual operating mode.

2.4.1.14 **REM** - Permits switching, at the receiver, between the local and remote modes of operation. The REM pushbutton LED is illuminated in the remote mode and extinguished in the local mode. When switching between modes is performed by a remote controlling device, the REM pushbutton LED indicates the operating mode.

*Indicates uppercase function.

Courtesy of http://BlackRadios.terryo.org

***488 ADDR** - This upper case function is only available when the WJ-861XB/488 IEEE-488 Interface option is installed. Depressing this pushbutton allows setting of the IEEE-488 address of the receiver. When this pushbutton is pressed, the LED associated with this key illuminates and the message Adr .xx is displayed in the FREQUENCY field of the display. Address selection is made by slowly rotating the tuning wheel until the desired address (00-30) is displayed. This address is used by an external IEEE-488 bus controller for remotely controlling the receiver or for master/slave operation if the Master/Slave Option is installed. This upper case function also allows master/slave operation to be enabled if the master/slave option is installed. When configuring the receiver to be controlled by an external IEEE-488 bus controller, ensure that the letter "S" does not appear adjacent to the displayed address. See **paragraph 2.4.2.5** for information on using this address in master/slave operation. Depressing this pushbutton again returns the front panel to normal operation. An alternate means to set the IEEE-488 bus address is via DIP switch S1 (positions 1 thru 5) on the IEEE-488 Option module.

2.4.1.15 **RCL** - The RCL pushbutton recalls the receiver information stored in the active memory channel and displays the information on the front panel display and indicator lights. The display of the memory information does not affect the receiver operation. The receiver remains locked to the previously selected functions and frequency.

2.4.1.16 **EXC** - Depressing the EXC button sets the receiver in accordance with the frequency and function selection stored in the active memory.

2.4.1.17 **CLR** - The CLR pushbutton activates a three step clear sequence that resets the receiver front panel and clears the memory. Depressing the CLR pushbutton one time initiates the clear sequence. The CLR LED illuminates, indicating that the clear sequence has been initiated, but the front panel and memory are not affected. This sequence can be aborted by depressing any front panel pushbutton, other than CLR. Depressing CLR a second time resets the front panel to: AGC ON, AFC OFF, BW #1, AM, MAN, COR-00, MEM-00, ANT 1, 20.0000 MHz with tuning disabled. The clear sequence can be aborted at this time without clearing the memory by depressing any front panel pushbutton, other than CLR. Depressing the CLR pushbutton a third time completes the clear sequence. The memory is cleared and the CLR LED is extinguished.

2.4.1.18 **SCAN** - In the Scan mode the receiver searches up to 48 operator programmed bands for signal activity greater than the programmed COR level. When signal activity is present, the receiver stops until the signal falls below the COR level or the operator again depresses the SCAN button.

2.4.1.19 **STEP** - In the Step mode, the receiver steps to the frequency set in each of the 96 memory channels. When signal activity greater than the programmed COR level is present, the receiver stops until the signal falls below the COR level or the operator again depresses the STEP button.

2.4.1.20 **FUNCTION (F↑)** - This pushbutton places the front panel pushbuttons into the uppercase mode of operation. In this mode, selected pushbuttons are utilized to control receiver options associated with the uppercase mode. Uppercase functions are indicated in **Table 2-3** with an asterisk (*) following the primary pushbutton function description. The primary function of the pushbuttons is unaffected when in the uppercase mode. When the Function (F↑) pushbutton is depressed, only the active uppercase function of a particular function illuminates an LED on that pushbutton.

*Indicates uppercase function

Courtesy of http://BlackRadios.terryo.org

With Type 796353-X Microprocessor (A5A3) installed, the receiver is able to be placed into a Test Mode. To place the receiver into the test mode, the FUNCTION pushbutton must be pressed in when receiver power is turned on. Test Mode enables the receiver to:

- Tune from 0 to 1200 MHz
- Select an empty IF bandwidth slot (without generating an ERROR 814)
- Display the decimal equivalent of the selected IF bandwidth

2.4.1.20.1 Extended Tuning Range

In the Test Mode, the receiver tuning range is extended. Instead of tuning from 20 MHz to 500 MHz, the receiver is able to be tuned from 0 to 1200 MHz. This extended tuning range is provided regardless of the receiver tuning range. By tuning the receiver to 0 MHz, the receiver's 1st LO is able to: be fed through the receiver to determine whether the receiver can pass a signal; check the Signal Monitor and check the audio circuit.

Tuning the receiver to 0 MHz injects the receiver's 1st LO (552 MHz) frequency through the receiver. At 0 MHz, the 1st LO is passed through the receiver as a 21.4 MHz signal with a very high amplitude. This signal is displayed on the Signal Monitor as a frequency spike. By selecting the different IF bandwidths, and observing the front panel SIGNAL STRENGTH display (to observe a 3 dB decrease in the level) the bandwidth of each IF Amplifier can be estimated.

2.4.1.20.2 Troubleshooting

While in the Test Mode of operation, the operator can select an IF bandwidth slot that is empty without generating an ERROR 814 on the front panel. If the receiver is not in the Test Mode, and empty IF bandwidth slot is not able to be selected. The Test Mode allows an IF Amplifier module to be removed and then select the empty slot for the purpose of troubleshooting. This allows the logic levels and supply voltages to be checked without having the IF Amplifier installed.

2.4.1.20.3 Displayed Decimal Code

With the Test Mode enabled, the decimal code for the selected IF bandwidth is displayed on the receiver front panel to the right of the MEMORY SELECT window. The decimal code is a three digit number representing the analog-to-digital equivalent of the IF bandwidth code. Refer to **Table 2-4** for the IF bandwidth decimal codes. Using the decimal code, an external controller is able to determine which IF bandwidth is selected. If the IF bandwidth code is out of the limits listed in the table, the decimal code can be adjusted without using a voltmeter. To adjust the displayed decimal code, the receiver power must be turned off and then on again for the microprocessor to update the decimal code.

Courtesy of http://BlackRadios.terryo.org

Table 2-4. IF Bandwidth Decimal Code

IF Bandwidth	DC Voltage	Decimal Code	
		From	To
6.4 kHz	0.500	11	16
10 kHz	1.000	24	30
15 kHz	1.500	37	43
20 kHz	2.000	51	56
25 kHz	2.250	57	63
30 kHz	2.500	64	70
40 kHz	2.750	71	76
50 kHz	3.000	77	84
75 kHz	3.500	92	99
100 kHz	4.000	100	113
3.2 kHz	4.500	114	127
250 kHz	5.000	128	140
300 kHz	5.500	141	154
500 kHz	6.000	155	168
1000 kHz	7.000	182	195
800 kHz	7.500	196	208
2000 kHz	8.000	209	221
8000 kHz	8.500	222	235
4000 kHz	9.000	236	248
6000 kHz	9.500	249	255

2.4.1.21 **DWELL** - The DWELL control sets the time period spent at each Scan increment or Step frequency in the Scan or Step mode. The DWELL is adjustable from approximately 0 (CCW) to 2 sec (CW).

2.4.1.22 **AUDIO GAIN** - The AUDIO GAIN control adjusts the level of the audio signal present at the phones jack. This level is adjustable to 10 mW.

2.4.1.23 **LINE AUDIO** - This rear panel control adjusts the level of the audio signal present at the rear panel audio output J3. This level is adjustable to 10 mW.

2.4.1.24 **RF/IF GAIN** - The RF/IF GAIN control provides manual control of the RF and IF amplifiers when AGC is not selected.

Courtesy of http://BlackRadios.terryo.org

2.4.1.25 **LOCK-OUT** - This function permits the exclusion of selected signals from a Scan preventing the receiver from locking-on to undesired signals. Pressing LOCK-OUT with the undesired frequency selected places the frequency and bandwidth of the signal in the lock-out memory. LOCK-OUT LED illuminates for 1 second. All signals within 1/2 of the IF bandwidth of the lock-out frequency will be omitted from succeeding Scans. Lock-out channels are sorted in order of ascending frequency regardless of the number displayed in the MEMORY SELECT window. The highest lock-out frequency occupies Channel 95.

2.4.1.26 **MSTR/SLAVE** (Optional) - The Master/Slave option permits the control of up to 14 additional master/slave equipped receivers, using the front panel controls of one of the receivers. Each receiver must be equipped with the IEEE Interface option. This button is blank if the master/slave option is not included.

2.4.1.27 **INTENSITY** (Optional) - The INTENSITY control varies the brightness of the trace on the CRT of the signal monitor.

2.4.1.28 **FOCUS** (Optional) - The FOCUS control provides a means of obtaining a sharp trace on the CRT.

2.4.1.29 **SWEEP RATE** (Optional) - The SWEEP RATE control is used to obtain optimum resolution at the sweep width being used and to prevent loss of sensitivity by sweeping too fast. The sweep rate is adjustable to 25 Hz.

2.4.1.30 **SWEEP WIDTH** (Optional) - The SWEEP WIDTH control varies the width of the frequency spectrum being viewed. In a fully clockwise position, the maximum bandwidth is displayed. The sweep width is adjustable from 0-4 MHz.

2.4.1.31 **CENTER FREQ** (Optional) - The CENTER FREQ control varies the horizontal position of the vertical pips on the CRT. Use this control to center the frequency spectrum under the center mark of the CRT.

2.4.1.32 **GAIN** (Optional) - The GAIN control varies the height of the vertical pips displayed on the CRT. This control is adjusted to maintain the desired height of the display.

2.4.1.33 **MARKER** (Optional) - In the ON position a 21.4 MHz marker is superimposed on the display as a reference marker. The marker frequency is locked to the receiver synthesizer.

2.4.1.34 **LIN/LOG** (Optional) - The LIN/LOG switch provides a linear or logarithmic vertical deflection. The LIN position provides a display with a vertical deflection proportional to the signal strength. In the LOG position, the vertical deflection is proportional to the log of the signal strength. This provides greater resolution of weaker signals in the log position.

Courtesy of http://BlackRadios.terryo.org

2.4.1.35 **DIGITAL DISPLAY** - The DIGITAL DISPLAY is composed of seven-segment LEDs. The display provides a digital read out, displaying the tuned frequency, COR level selected, relative signal strength and active memory channel. With the DAV option installed, the audio or video output levels will be displayed in the COR window when the uppercase mode is selected.

2.4.2 LOCAL OPERATION

2.4.2.1 Manual Control

The manual mode of operation permits total control of the receiver utilizing the front panel pushbuttons and control knobs. All operating parameters are selected utilizing the controls described in **paragraph 2.4.1.**

In addition to manually operating the receiver, the manual mode also permits the operator to program the receiver's 96 channel memory and to enter into the Scan or Step modes of operation.

2.4.2.2 Memory Programming

The receiver's memory permits storage of receiver parameters such as COR level, RF/IF Gain, AFC and AGC status, ANTENNA, DETECTION MODE, IF BANDWIDTH and TUNED FREQUENCY. This stored data can be used to provide the desired receiver parameters during the Scan or Step modes of operation, or it can function as a scratch-pad memory in the manual mode to retain particular receiver settings. Programming of the memory is performed as follows:

Depress Memory Select Up/Down	Hold the Up or Down Memory Select pushbutton depressed until the number corresponding to the desired memory channel is displayed in the Memory Select window (00-95) and then release the pushbutton.
Depress COR Up/Down	Hold up or down COR LEVEL pushbutton depressed until the number corresponding to the desired COR LEVEL is displayed in the COR window (00-40 or --).
Depress AFC	Changes status of AFC. AFC on - LED illuminated AFC off - LED extinguished

Courtesy of http://BlackRadios.terryo.org

Depress AGC	Changes AGC status. Automatic Gain Control - LED illuminated Manual Gain Control - LED extinguished
Depress BW	Depress Bandwidth pushbutton corresponding to the desired IF Bandwidth. LED on the selected Bandwidth pushbutton illuminates.
Depress DETECT	Depress pushbutton corresponding to the desired Detection mode. AM, FM or Pulse detection standard; SSB optional. LED on selected Detection mode pushbutton illuminates.
Rotate Tuning Knob	Rotate the tuning knob CW or CCW until the desired frequency is displayed by the frequency display above the tuning knob. The tuning increments are determined by the 1 MHz, 10 kHz and 100 Hz Tuning Rate pushbuttons
Depress ANT 2	Selects RF input from the standard Antenna 1 or Auxiliary Antenna 2. LED illuminated - Antenna 2 selected LED extinguished - Antenna 1 selected
Depress STO	Stores the selected receiver parameters into the memory channel displayed in the memory select window. Once the information is stored, the memory channel display is automatically incremented to the next higher channel.

Courtesy of http://BlackRadios.terryo.org

Data stored in each memory channel can be recalled by depressing the RCL pushbutton. When RCL is depressed, the receiver parameters stored in the channel displayed in the memory select window will be displayed on the front panel indicators of the receiver. The receiver remains at the parameters set prior to the selection of RCL. Depression of the MAN pushbutton returns the indicators to that of the receiver setting or depression of EXC (EXECUTE) sets the receiver to the recalled data on the front panel.

2.4.2.3 Scan Mode

In the Scan Mode, the receiver Scans up to 48 operator programmed frequency bands utilizing the standard receiver memory. All receiver parameters and the start frequency of each Scan are stored in the EVEN numbered memory channels and the stop frequency is stored in the ODD channels. Upon initiation of the Scan, the receiver begins the Scan at the frequency stored in the EVEN numbered memory channel, and continues to the next higher ODD numbered channel containing the stop frequency. The Scan is performed in discrete increments equal to approximately one-half the programmed IF bandwidth. The Scan increments for the various IF bandwidths are listed in the Table of Scan Increments **(Table 2-5)**. A maximum of 65536 incremental steps can be made in each Scan, limiting the width of each Scan band to the Scan increment times 65536. If the maximum width is exceeded, an ERROR 812 appears on the front panel display.

Table 2-5. Table of Scan Increments

Selected IF Bandwidth	SCAN Increment	Selected IF Bandwidth	SCAN Increment
10 kHz	5 kHz	300 kHz	150 kHz
20 kHz	10 kHz	500 kHz	250 kHz
50 kHz	20 kHz	1 MHz	500 kHz
75 kHz	30 kHz	2 MHz	1 MHz
100 kHz	50 kHz	4 MHz	2 MHz
250 kHz	120 kHz		

If the COR LED is illuminated when the Scan is initiated, the receiver waits 50 msec. before stepping to the next frequency increment, permitting the COR circuits to deactivate. After stepping to the new frequency, if the COR LED extinguishes and comes back on, the receiver locks on to the signal. Otherwise, the Scan continues. When programming the COR level as one of the Scan parameters, it should be set at a level that permits the LED to extinguish in the absence of signals, but causes the LED to illuminate when signal activity is present. Otherwise, the COR LED remains on at all times and the receiver will not stop on a signal during the Scan.

During the Scan, if AFC is selected, the AFC LED remains illuminated. When a signal is detected, and the COR LED illuminates, the AFC adjusts the receiver to center the signal within the IF bandwidth. If AGC is selected, the AGC LED extinguishes and the receiver operates at maximum gain during the Scan. AGC remains inactive until the operator selects the Scan Continue mode.

Courtesy of http://BlackRadios.terryo.org

The type Scan sequence is determined by the channel number displayed in the memory select window at the time the SCAN button is depressed. When an EVEN number is displayed, the receiver begins the Scan at that EVEN channel and continues to the next ODD number in sequence. This single band continues to be Scanned until signal activity greater than the programmed COR level is detected or until the MAN pushbutton is depressed. If an ODD number is displayed when the Scan is initiated, the Scan begins Scanning at channel 00 and Scans each band until it reaches the ODD number that was present when the SCAN button was depressed. This multiple Scan sequence continues until signal activity greater than the programmed COR level is detected or the MAN pushbutton is depressed.

Prior to initiating the Scan function, the memory must be programmed, using the procedures described in **paragraph 2.4.2.2.** Using this procedure, enter the operating parameters and start frequency into the EVEN channel and then Step the memory select to the next higher ODD channel. Enter the stop frequency (stop frequency must be greater than start frequency). Upon completion of memory programming, the Scan function can be initiated as follows:

Depress Memory Select Up/Down	Hold the Up or Down pushbutton depressed until the desired memory channel is displayed in the memory select window (n). This step determines the type of Scan sequence that is selected. If n = ODD number - Receiver first Scans from channels 00 to 01. Each succeeding band is sequentially Scanned up to and including the band comprised of channels n - 1 to n. If n = EVEN number - Receiver Scans a single band from channel n to n + 1.
Depress SCAN	Initiates the selected Scan sequence. Scan pushbutton LED illuminates and the front panel indicators reflect the programmed parameters for the active band. The frequency display displays the frequency of each increment of the Scan. If AGC has been selected as one of the programmed parameters, the AGC LED is extinguished and the receiver operates at maximum gain during the Scan.

Courtesy of http://BlackRadios.terryo.org

Rotate DWELL Knob	Controls the Scan rate by controlling the time that the receiver dwells at each increment of the Scan. Fully counterclockwise rotation selects minimum Dwell time with the time increasing as the knob is rotated clockwise.

When a signal greater than the programmed COR level is encountered, the Scan stops and the COR pushbutton LED illuminates. The receiver remains at this frequency as long as the signal is present or until the SCAN button is again depressed to resuming the Scan sequence.

2.4.2.3.1 SCAN Continue

The Scan Continue function permits the interruption of the Scan sequence allowing manual control of the receiver. This mode permits an operator to manually optimize the detected signal and to re-enter the Scan sequence at the point where the interrupt took place. Entering into the Scan Continue mode from the Scan mode is performed as follows:

Depress MAN	Initiates the Scan Continue mode of operation. SCAN pushbutton LED remains on and the MAN pushbutton LED illuminates. If AFC was on during the Scan, it is turned off and the AFC LED is extinguished If AFC is still desired, it must be reselected by depressing the AFC pushbutton. If AGC was selected as a Scan parameter, it is activated and the AGC LED illuminates. The receiver gain is then controlled by the AGC circuitry.
Operate Manual Controls	All front panel controls function as if in the manual mode of operation. Use controls to optimize response of detected signal. From this mode: a) the Scan can be re-entered at the point where the Scan was interrupted, or b) the receiver can be placed into the manual mode of operation.

Courtesy of http://BlackRadios.terryo.org

a) Re-enter the Scan mode:

Depress SCAN	Returns the receiver to the Scan mode of operation. The MAN LED is extinguished and the SCAN LED remains illuminated. The Scan is restarted at the point where it was interrupted by the Scan Continue function.

b) Enter Manual mode:

Depress MAN	Places the receiver into the manual mode of operation from the Scan Continue mode. The MAN LED remains illuminated and the SCAN LED is extinguished.

2.4.2.3.2 **Scan Lock-Out**

This function permits the exclusion of selected signals from the Scan preventing the receiver from locking onto undesired signals. Lock-out data is stored in the higher order memory channels, in ascending order, according to frequency (channel 95 will store the highest Lock-out frequency). The Scan mode, utilizing the Lock-out function, is described as follows:

Depress SCAN	Activates the Scan mode of operation. The SCAN LED is illuminated. The receiver Scans the programmed frequency bands until signal activity is encountered. When signal activity greater than the programmed COR level is encountered, the receiver locks onto the signal.
Depress MAN	Places the receiver into the Scan Continue mode of operation. The SCAN and MAN LEDs are both illuminated. The receiver can now be operated manually to optimize the detected signal and the bandwidth can be changed to determine the bandwidth of the Lock-out channel.

Courtesy of http://BlackRadios.terryo.org

Depress LOCK-OUT	The frequency and bandwidth of the undesired signal is stored in the Lock-out memory. LOCK-OUT LED illuminates for 1 second. All signals within 1/2 of the IF bandwidth of the Lock-out frequency are omitted from succeeding Scans. If AFC has been selected, Lock-out occurs after the signal is centered.

2.4.2.3.3 Lock-Out Channel Recall and Deletion

This mode permits the Recall and display of the information stored in the Lock-out channels. It also permits revision of Lock-out memory by permitting the deletion of channels where Lock-out is no longer desired. To activate the Recall mode, the receiver must be in either the Scan Continue or Manual mode of operation. This operating mode is activated as follows:

Depress RCL	Initializes the Recall mode of operation. The RCL pushbutton LED is illuminated and the front panel display reflects the information stored in the channel whose number is displayed in the MEMORY SELECT window.
Depress MEMORY SELECT Up/Down	Hold the MEMORY SELECT Up or Down pushbutton in until the number corresponding to the desired memory channel is displayed in the MEMORY SELECT window. When the displayed channel is a Lock-out channel, the letters "LL" will be displayed in the COR window.
Depress LOCK-OUT	Deletes the information stored in the Lock-out channel that is displayed in the MEMORY SELECT window. The LOCK-OUT LED illuminates for 1 second. When a channel is deleted, all Lock-out channels below the deleted one move up one location.

Courtesy of http://BlackRadios.terryo.org

Depress MAN	Deactivates the Recall mode and activates the previously selected operating mode (MAN or Scan Continue).

2.4.2.4 **Step Mode**

In the Step mode, the receiver Steps through up to 96 operator programmed memory channels in search of signal activity, utilizing the standard receiver memory. Each memory channel is programmed with a complete set of receiver parameters using the memory programming procedure described in **paragraph 2.4.2.2.** RF frequencies need not be in ascending order as in the Scan mode.

The number displayed in the memory select window (n) determines the highest channel used in the Step sequence. When the STEP pushbutton is depressed, the receiver begins Stepping all channels containing valid memory data, starting at channel 00 and continuing to channel n. This Stepping sequence continues until a signal greater than the programmed COR level is detected or until the MAN pushbutton is depressed.

If the COR LED is illuminated when the Step mode is initiated, the receiver waits 50 msec. before Stepping to the next memory channel permitting the COR circuits to deactivate. After 50 msec., if the COR LED is still on, the receiver locks onto the signal. Otherwise, the receiver Steps to the next memory channel.

Prior to initiating the Step mode, program the memory utilizing the procedure outlined in **paragraph 2.4.2.2.** The Step mode can then be initiated as follows:

Depress Memory Select Up/Down	Hold the Up or Down pushbutton depressed until the number corresponding to the highest desired memory channel is displayed in the Memory Select window. **NOTE:** The displayed number must be greater than 00.
Depress STEP	Initiates the Step mode of operation. The STEP pushbutton LED illuminates and the front panel indicators reflect the programmed parameters in each memory channel as it is selected. The Step sequence begins at channel 00 and sequentially Steps to each channel.

Courtesy of http://BlackRadios.terryo.org

Rotate DWELL Knob	Controls the time the receiver Dwells at each channel in the Step sequence. Fully counter-clockwise rotation selects minimum dwell time with the time increasing as the knob is rotated clockwise.

When a signal greater than the COR level is encountered, the Step sequence stops and the COR pushbutton LED illuminates. The receiver remains at this frequency as long as the signal is present or until the STEP pushbutton is again depressed to resuming the Step sequence.

2.4.2.4.1 Step Continue

The Step Continue function permits the interruption of the Step sequence to allow manual control of the receiver. This function permits an operator to manually optimize the detected signal and re-enter the Step sequence at the point where the interrupt took place. It also allows the operator to reprogram that memory channel if the signal is of no further interest. Entering into the Step Continue mode from the Step mode is performed as follows:

Depress MAN	Initiates the Step Continue mode of operation. The STEP pushbutton LED remains on and the MAN LED illuminates. The front panel indicators reflect the data stored in the memory channel displayed in the Memory Select window.
Operate MANUAL Controls	All front panel controls function as in the Manual mode of operation. Use the controls to optimize the detected signal or to change parameters if the detected signal is of no interest.
Depress STO	Updates the displayed memory channel with the new or revised data. The STO pushbutton LED illuminates for 1 second when depressed.

Courtesy of http://BlackRadios.terryo.org

From the Step Continue mode, the Step mode can be re-entered at the point where the Step sequence was interrupted or the receiver can be placed into the Manual mode of operation.

a) Re-enter the Step mode:

Depress STEP	Returns the receiver to the Step mode of operation. The MAN pushbutton LED is extinguished and the STEP LED remains illuminated. The Step sequence is restarted at the point where the interrupt took place.

b) Enter the Manual Mode:

Depress MAN	Places the receiver into the Manual mode of operation. The MAN pushbutton remains illuminated and the STEP pushbutton LED extinguished.

2.4.2.5 **Master/Slave Operation** (Optional)

The Master/Slave function permits the control of up to 14 slave receivers utilizing the front panel operation of a master receiver provided that all 15 of these receivers are configured with the WJ-861XB/488 option. The receivers are connected by an IEEE-488 bus, but do not employ the IEEE-488 standard protocol. Only one receiver can be employed as the "Master" on the bus at one time. Similarly, in master/slave operation, controller or talker devices cannot be installed on the IEEE-488 bus. Prior to master/slave operation, each receiver on the bus must be assigned a bus address number (00-30) and configured for master/slave operation. Slave receivers may share the same bus address or have unique addresses. See **paragraph 2.4.2.5.1** for information on setting the address of the receivers and configuring the receivers for master/slave operation.

NOTE

Configuration differences between the master and slave receivers should be noted (configuration of bandwidth slots, number of available bandwidth slots, demodulation modes, etc.) prior to using the master/slave function. See **paragraph 2.4.2.5.3** for details.

During master/slave operation, the designated master receiver has the capability to control another WJ-861XB(S1) as a slave (hand-off) receiver. The control of the slave is accomplished via the master front panel. A master receiver is designated and the slave receiver is addressed by the master (see **paragraph 2.4.2.5.2**). Once communications are established, the master front panel is in direct control of the slave. Front panel operation of the master controlling the slave is the same as if in local mode. Memory channel selections and parameter changes of the slave by the master are carried out as in normal operation. When the master is in control of a slave, a change made to a memory channel will also change the memory channel of the slave when the STO function is used. For this reason, when initially programming memory channels, it is recommended that memory channels matching addresses of slave receivers be

Courtesy of http://BlackRadios.terryo.org

reserved for later use while in master/slave operation. It is also recommended that the high order address numbers (30 and down) be used for receiver addresses so as to not interfere with step or scan parameter programming (00 and up). Refer to **paragraph 2.4.2.5.4** for special operating considerations while in master/slave mode. **Paragraph 2.4.2.5.2** explains the initialization proce-dure for master/slave operation.

2.4.2.5.1 Configuring the Receiver for Master/Slave Operation

To prepare a receiver for master/slave operation, assign an IEEE-488 bus address to the receiver and select the the master/slave interface mode according to the following steps:

Depress FUNCTION pushbutton	Places the receiver front panel in the uppercase mode.
Depress the 488 ADDR pushbutton (REM pushbutton)	The front panel displays Adr XX (XX=00-30).
Rotate the tuning wheel	Rotating the tuning wheel selects the receiver remote address within the range of 00-30.
Depress the MSTR/SLAVE pushbutton	Selects either Remote or Master/Slave mode for the remote interface. An "S" is displayed in the FREQUENCY window when Master/Slave mode is selcted. The "S" must be displayed on the master and slave receiver (S) for Master/Slave operation to function.
Depress the REM pushbutton	Address and mode selection is loaded into memory, IEEE-488 STD is disabled, master/slave enabled, and front panel returns to normal operation.

2.4.2.5.2 Entering and Exiting Master/Slave Operation

After the receivers have been assigned address numbers on the bus, the designated master receiver is able to select a slave and control it by the master front panel. The slave is under total remote control by the master disabling all local front panel control with the exception of the REM pushbutton which can be depressed at any time to remove the slave from remote control. Master/slave operation is entered and exited as follows:

At the master receiver, depress the Up or Down Memory Select pushbuttons until the desired slave address is displayed in the MEMORY SELECT window.	Selects the address of the slave to be controlled.

Courtesy of http://BlackRadios.terryo.org

NOTE

If the Clear pushbutton (CLR) is pressed, the master and slave receivers should be turned off and on again. Otherwise uncertain master/slave operation may occur.

At the master receiver, depress MSTR/SLAVE pushbutton

Designates the master receiver, activates the Master/Slave mode of operation, and places the addressed receiver(s) into the Slave mode. The LED on the MSTR/SLAVE pushbutton illuminates on the master receiver and the REM pushbutton LED on the addressed slave receiver(s) illuminates. All front panel controls on the slave receiver(s) are disabled except for the REM pushbutton. All master receiver controls function normally and control both the master and addressed slave receiver(s).

NOTE

Depressing the REM pushbutton on a slave receiver while in Master/Slave mode removes the slave receiver from control by the master receiver and restores local control.

To exit Master/Slave mode of operation, depress the MSTR/SLAVE pushbutton on the master receiver.

When in the Master/Slave mode, depression of the MSTR/SLAVE pushbutton exits the Master/Slave mode and the LED on the MSTR/SLAVE pushbutton is extinguished. If the master receiver is in manual mode of operation, the parameters on the front panel at the time of the exit from the Master/Slave mode are stored in the master receiver memory channel that corresponds to the slave receiver address. To exercise control of another slave receiver, repeat the above steps. Any other receiver having a unique address may be designated as the master receiver.

Courtesy of http://BlackRadios.terryo.org

2.4.2.5.3 Configuration Variances In Master/Slave Operation

Typically, master/slave receiver networks are designed so that all the receivers are configured identically. When there are variances in the configurations between receivers in a master/slave network, limited operations can be accomplished. For instance, most functions common to a master and a slave receiver can be accomplished. Directions by a master receiver to perform functions unavailable in a slave receiver are simply ignored by the slave. When bandwidth slots are configured differently, selecting a bandwidth slot by pressing a master front panel key activates the analogous bandwidth slot in the slave receiver; therefore, configuration differences must be noted. When there is a variance in the number of available bandwidth slots between the master and the slave receiver, selection of the extra bandwidth slots are ignored by the slave. Also, differences in key selection of bandwidth slots must be observed. See **Figure 2-2A.**

2.4.2.5.4 Special Operating Considerations in Master/Slave Mode

When operating the receiver in master/slave mode there are some operating conditions that should be noted. Some of these relate to general operations and others relate specifically with performing scan and step operations, while in master/slave mode. Some general considerations are:

- Master/Slave Operations are optional operations that enhance the basic operations of the receiver. The Master/Slave option can coexist independently with other options that enhance the receiver in other ways without an adverse effect on these other enhancements. However, these enhanced operations sometimes cannot be directed by a master addressing a slave even if the associated enhancement is installed in both the slave and the master. An example of an enhanced operation that is not recognized in master/slave mode is built-in test operations.

- When the master is controlling a slave in the manual mode of operation, exiting the master from master/slave mode stores its last front panel parameters into the memory channel that is displayed on the master upon exit. Also, the displayed memory channel is incremented by one. Care should be taken not to overwrite memory channels where important operating parameters reside.

- The master receiver can recall the contents of its own memory. It cannot recall the contents of a slave's memory channel.

Courtesy of http://BlackRadios.terryo.org

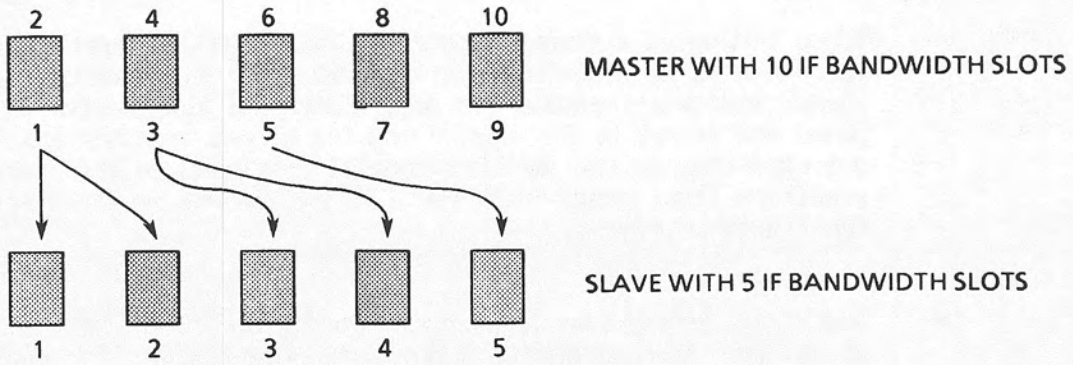

(A)

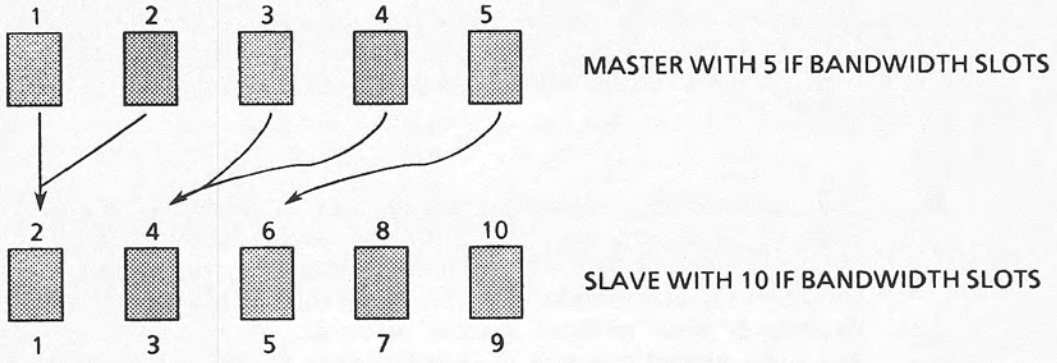

(B)

Figure 2-2A. Selecting Bandwidth Slots in Master/Slave Mode

Courtesy of http://BlackRadios.terryo.org

Some operational considerations that relate specifically to Scan and Step operations are:

- When setting up a slave receiver for step or scan operation, the slave has to be addressed and controlled by the master. The slave's memory channels are programmed at the master front panel and stored in the master and the slave's memory channel corresponding to the memory channel displayed on the master receiver's front panel when the STO pushbutton on the master front panel is pressed.

- The slave receivers do not operate as slaves in the strictest sense of the word when operating in Scan and Step modes. The master receiver controls the Scan or Step parameters and initiates the Step or Scan process. However, once the Scan or Step operation is initiated, there is not a direct correlation between the master's tuned frequency and that of the slave.

- A single handoff of manual parameters from a master to a slave may be performed. If the operator selects a slave address and presses the MSTR/SLAVE pushbutton while the master is in Scan Continue or Step continue mode, a single transfer of the master receiver's parameters to the slave will be performed. By this action, a scanning or stepping master may handoff signals of interest to a slave without actually taking full control of the slave.

- The master/slave capability can be used to perform a handoff of Scan or Step parameters. Once the slave receiver is directed from the master to start scanning or stepping, the master can be exited from master/slave mode. The former slave will continue to step or scan without master control. At this juncture, Scan and Step operations can be interrupted, reconfigured, restarted, and terminated at the front panel of the former slave just as would be possible if the operations were initiated by the slave.

- When in Scan, Step, Scan Continue, or Step Continue modes, exiting the master from master/slave mode does not store the front panel parameters at the time of exit into the memory channel displayed at the time of exit.

Courtesy of http://BlackRadios.terryo.org

2.4.2.6 **Cursor** (Optional)

Cursor is an optional mode of operation that is available when the Digital Refreshed Display option and an active Function (F↑) pushbutton are installed. In this mode, a portion of the RF spectrum can be Scanned with a signal strength versus frequency display of the Scanned frequencies displayed on the signal monitor of the receiver. The tuning knob can then be rotated to position a cursor over any of the signal pips displayed on the signal monitor. When the cursor is positioned over the signal pip, the frequency of that signal is displayed in the Frequency Window of the digital display.

Prior to entering into the Cursor mode, the memory must be programmed, using the procedure described in **paragraph 2.4.2.2.** Store the start frequency and operating parameters into the EVEN numbered channels and the stop frequency in the ODD channels. Upon completion of the memory programming, the Cursor mode may be entered into, as follows:

Depress F↑	Selects the uppercase function. All pushbutton LEDs, except for active uppercase functions, extinguish.
Depress Cursor (SCAN pushbutton)	Selects the Cursor mode of operation and activates the Cursor Scan. The pushbutton LEDs on the front panel again illuminate and the receiver performs a single Scan of the programmed band. Upon completion of the Scan, the receiver enters into the Cursor/ Manual mode of operation.
Operate the Tuning Rate pushbutton	Select the desired tuning rate by depressing the 1 MHz, 10 kHz or 100 Hz pushbutton and rotate the tuning knob until the Cursor is positioned over the desired signal pip on the signal monitor. The frequency display on the digital display indicates the frequency at which the Cursor is positioned. **Note:** The Cursor travel is not limited to the frequency band displayed on the signal monitor. Therefore, if the Cursor does not appear on the signal monitor, rotate the tuning knob until the displayed frequency is within the Scanned frequency band.

Courtesy of http://BlackRadios.terryo.org

To disable the Cursor mode, and return the receiver to normal operation, proceed as follows:

Depress F ↑	The Cursor (SCAN) pushbutton LED illuminates and all other LEDs extinguish.
Depress CURSOR (SCAN)	The CURSOR (SCAN) LED extinguishes and the selected pushbutton LEDs again illuminate. The receiver is then restored to normal operation.

2.4.2.7 <u>Digital Audio/Video Gain</u> (Optional)

Digital Audio/Video Gain (DAV) is an option permitting digital control of the audio and video outputs of the receiver. With the Digital Audio/Video Gain subassembly installed in option slot 6 of the Digital Motherboard (A5), the audio and video outputs can be controlled over a 30 dB range, using the front panel pushbuttons. In the DAV mode, the COR window displays a number from 00 to 99 representing the output level of either the audio or video outputs, depending on which of the functions are selected.

Courtesy of http://BlackRadios.terryo.org

Selection of DAV and the setting of the output levels are performed as follows:

Depress F↑	Selects the uppercase function. All pushbutton LEDs, except for active uppercase functions extinguish. The F↑ LED illuminates, indicating that the front panel is in the uppercase mode.
Depress AUDIO (AFC Pushbutton)	Selects Audio Gain Control. The LED on the AUDIO (AFC) pushbutton illuminates and the COR window displays the audio output level.
Depress COR UP/DOWN	Depress and hold the COR UP or DOWN pushbutton until the desired audio output level is displayed in the COR window. 99 - Maximum output level. (Clipping level at 100% modulation.) 00 - Minimum output level. (Noise level when no modulation is present.)
Depress VIDEO (AGC Pushbutton)	Selects Video Gain Control. The LED on the Video (AGC) pushbutton illuminates and the AUDIO LED (if previously selected) extinguishes. The COR window displays the video output level.
Depress COR UP/DOWN	Depress and hold the COR UP or DOWN pushbutton until the desired video output level is displayed in the COR window. 99 - Maximum output level. (Clipping level at 100% modulation.) 00 - Minimum output level. (Noise level when no modulation is present.)

2.4.2.8 **Single Sideband Operation** (Optional)

The capability of detecting Upper Sideband (USB) and Lower Sideband (LSB) signals is incorporated in the WJ-8618B(S1) receiver when the SSB Demodulator (A3A14) is installed in the receiver along with the (A4A5) SSB BFO (for 100 Hz tuning resolution) or the VBFO (for

Courtesy of http://BlackRadios.terryo.org

10 Hz Tuning Resolution). With Single Sideband capabilities added, an IF Amplifier and FM Demodulator with a bandwidth of 20 kHz or less should be installed in the bandwidth #1 slot. A 6 kHz IF bandwidth is preferred for SSB operation.

Selection of SSB operation is accomplished by depressing the SSB pushbutton. When selected, the SSB pushbutton illuminates and the #1 bandwidth is automatically selected. A "U" or an "L" illuminates on the digital display indicating whether the Upper Sideband (U) or Lower Sideband (L) is active. Switching between Upper and Lower Sideband operation is performed by again depressing the SSB pushbutton.

2.4.2.9 **Error Codes**

If an error condition should occur, the word ERROR along with a three-digit error code is momentarily displayed in place of the frequency display. In the Remote mode, the two least significant digits of the error code are available to the controller, via the remote bus. The error codes associated with the various operating modes are as follows:

Error 551	This code is displayed if all Lock-out channels are in use and the creation of an additional one is attempted. To increase Lock-out memory space, depress RCL and Step to a channel number below the lowest existing Lock-out channel. Depress LOCK-OUT. The displayed channel and all higher channel numbers are now available for Lock-out.
Error 552	This code is displayed when an attempt is made to store data, other than Lock-out data into a channel designated for Lock-out.
Error 810	This code is displayed when an attempt is made to initiate the Step or Scan mode and no valid data is stored in the memory locations to be Scanned or Stepped. The memory must be programmed as described in **paragraph 2.4.2.2.**
Error 811	This code is displayed when an attempt is made to initiate the Step mode when 00 is displayed in the Memory Select window. Depress the Memory Select Up pushbutton to select a channel greater than 00.

Courtesy of http://BlackRadios.terryo.org

Error 812	This code is displayed if an attempt is made to initiate a Scan and the number of Scan increments required is greater than 65536. The maximum width of a Scan band is equal to the Scan increment times 65536.
Error 813	This code is displayed if a Scan is initiated when the memory is programmed with the start frequency greater than the stop frequency. The memory must be programmed with the EVEN numbered channel containing the lower frequency with the frequencies in ascending order. This code is also displayed when the frequency step is less than the selected bandwidth.
Error 814	This code is displayed when an attempt is made to utilize a nonexisting IF bandwidth.
Error 815	This code is displayed when the stop frequency BANDWIDTH is greater than or equal to the start frequency BANDWIDTH.

When the receiver is equipped for Remote operation, an additional set of error codes is utilized to inform the operator of an error condition, associated with the Remote mode. If an error condition should occur, the work ERROR along with a three digit error code is momentarily displayed in place of the frequency display. In addition, a service request is initiated to flag the controller. When queried by the controller, the two least significant digits of the error code are placed on the bus. The error codes associated with the Remote mode of operation are as follows:

Error 401	Buffer full (message too long).
Error 402	Less than two characters in the message.
Error 403	Framing, parity or overrun error (RS-232).
Error 404	Invalid number.
Error 406	"/" or "?" not valid for this mnemonic.
Error 407	Invalid message.

Courtesy of http://BlackRadios.terryo.org

2.5 REMOTE OPERATING CHARACTERISTICS

The IEEE-488 Remote Interface provides talk and listen capabilities between the receiver and external equipment, such as calculators, minicomputers or other IEEE-488 equipped controlling devices. The data is transferred between units in a bit-parallel, byte serial form, utilizing sixteen interconnection lines. These lines consist of eight bi-directional data bus lines, three data byte transfer lines and five management lines. Data or address information is transferred between devices, utilizing the data bus lines. Refer to **Figure 2-3.**

Figure 2-3. Configuration of IEEE-488 Data Bus

The data byte transfer lines indicate: the availability and validity of the information on the data bus lines; if the devices are ready to accept data; and if the data has been accepted. The interface management lines: specify whether the data bus lines are carrying data or address information; request service; clear the interface; and indicate the end of a transfer sequence. The capabilities of the IEEE-488 Interface include:

- Source handshake
- Acceptor handshake
- Basic talker with serial poll
- Basic listener with serial poll
- Service request

Essentially, this means that the receiver can talk or listen when commanded by the controller. It can also issue a service request notifying the controller when it needs service.

Courtesy of http://BlackRadios.terryo.org

Two types of data transfer are supported on the WJ-8618B(S1) Receiver. One type of data transfer on the IEEE-488 interface bus is ASCII. This type of transfer utilizes ASCII mnemonics to control the receiver. The termination may be CR, LF (Carriage Return, Line Feed) or LF (Line Feed) or EOI (End or Identify) set on the last character of the transfer. These mnemonics may be strung together utilizing a semi-colon. Another type of data transfer supported by the WJ-8618B(S1) Receiver is binary. This type of data transfer allows single information bytes to control the receiver. In the binary operation, each command must end with EOI (End or Identify) set on the last byte of the command. Commands may not be strung with a semi-colon or terminated with CR (Carriage Return) or LF (Line Feed). The ASCII operation format tends to be self-documenting and easy to understand. Binary, on the other hand lessens the number of bytes that must be transferred and has a faster execution speed. In the ASCII format, the message consists of a series of data bytes that form one of the mnemonics listed in **Table 2-6.** Each byte is one ASCII character of the mnemonic. When the mnemonic contains a variable value, the mnemonic is followed by a number representing that value. Each digit of the number is applied as a separate ASCII character. In the binary format, the mnemonic is one 8-bit byte containing the hexadecimal code corresponding to the mnemonic. When a variable value is to be included in the message, it is sent as one or more additional data bytes, representing the binary or hexadecimal value.

In the ASCII mode of operation, the WJ-8618B(S1) Remote Interface can accept data at a rate of 300 μsec per byte. The overall time to send the message to the receiver is determined by: the number of characters in the message times 300 μsec (or: the number of bytes times the transfer rate of the controller, whichever is greater). Once the last message byte (line feed) is accepted, the receiver carries out the command within 2 msec. A message such as RFG (n) could take significantly longer due to the receiver's method of updating this parameter. The time required could vary from 2 msec. to 20 msec. When a message such as FRQ? is sent, the receiver will begin to return data within 2.0 msec. of the time that the last message byte was sent. The response is returned at a maximum rate of 70 μsec per byte. This time will vary with the speed that the controller can accept the data provided. A typical response to an FRQ? is 3.0 msec. or less.

The Binary mode of operation permits a faster transfer of data. The interface can accept data at a rate of 250 μsec per byte and the message length is considerably shorter. Processing of the message by the receiver is also shorter in this mode. After the last byte of the command is accepted the receiver carries out the message within 1.5 msec.

In both the binary and ASCII modes of the interface, the time lapse from the time the receiver acquires or loses a signal to the time that SRQ (Service Request) is set is determined by the receiver's operating mode. When the receiver is at a fixed frequency and a signal comes up above the programmed COR level, the SRQ bit will be set within 2 msec. A loss of the signal causes the receiver to verify that the signal is no longer present. The SRQ is set within 10 msec of signal loss. If the receiver is tuned to a frequency where a signal is present, it sets SRQ in 15 msec. If it is tuned from an existing signal to a frequency where no signal is present, the SRQ is set in 25 msec.

Courtesy of http://BlackRadios.terryo.org

Table 2-6. Mnemonics and Binary Codes

NOTE: The following table lists all possible mnemonics for the receiver. This includes the mnemonics used with the optional assemblies.

ASCII	Hex	Dec	Description
ABS	B7	183	Select ABSENT mode
ABS1	B8	184	De-select ABSENT mode
AFC	42	66	Turn AFC on
AFC/	43	67	Turn AFC off
AFC?	44	68	Request AFC mode
AGC	45	69	Turn AGC on
AGC/	46	70	Turn AGC off
AGC?	47	71	Request AGC mode
AM	48	72	Select AM detection mode
AM?	4A	74	Request AM modulation 0-68
ANT(a)	4B(b)	75(b)	Select antenna (1,2)
ANT?	4D	77	Request what antenna used
AUD(a)	9F(b)	159(b)	Set audio level 0-255
AUD?	A1	161	Request audio level
BFO(a)	39(p)	57(p)	Set BFO frequency ±7.99 kHz
BFO?	3B	59	Request BFO frequency
BIC?	AA	170	Request reading of error
BIN		84	Causes all future commands to be in binary
	55	85	Causes all future commands to be in ASCII
BIT (a)	A5(b)	165(b)	Cause BITE to start/continue
BIT?	A7	167	Request BITE error number
BW(a)	4E(b)	78(b)	Select BW slot 1-5
BW?	50	80	Request which BW slot
BWC?	9E	158	Request BW size
CLM	6C	108	Clear receiver & memory
CLR	51	81	Clear receiver
COR(a)	57(b)	87(b)	Set COR level 0-40
COR?	59	89	Request COR level
CST?	9B	155	Request COR status
CW	5A	90	Select CW detection mode
DET?	5F	95	Request detection mode selected
DWL(a)	60(b)	96(b)	Select DWELL time period
DWL?	62	98	Request DWELL number
ERR?	65	101	Request ERROR number
EXC	66	102	Execute current parameters

(a) - Utilized in a command as an ASCII number or a group of numbers.
(b) - A single byte of binary information.
(p) - Eight packed BCD digits in four bytes of information.
(_) - Represents the default mode.

Courtesy of http://BlackRadios.terryo.org

Table 2-6. Mnemonics and Binary Codes (Continued)

ASCII	Hex	Dec	Description
FM	69	105	Select FM detection mode
FM?	6B	107	Request FM modulation 0-100
FMO?	AD	173	Request reading of offset 0-255
FRQ(a)	3C(p)	60(p)	Set tuned frequency in MHz
FRQ?	3E	62	Request tuned frequency
FSM	C5	197	Select Full-Scan mode
FSN	C3	195	Select Full Scan
FSN/	C4	196	De-select Full Scan
KEY?	AB	171	Which Uppercase Key?
LCK	94	148	Lock-Out current parameters
LGV?	71	113	Request reading of Log Video
LOG	96	150	Select LOG Detection mode
LSB	72	114	Select LSB detection mode
MAN	75	117	Select Manual operation
MOD?	B3	179	Request operation mode
NOR	BA	186	Normal COR mode
NRT	B4	180	Select NRT mode
NRT/	B5	181	De-select NRT mode
NTR?	B6	182	NRT Inactive
PLS	78	120	Select Pulse operation mode
PRS	BD	189	Select PRESENT mode
PRS/	BE	190	De-select PRESENT mode
RCL(a)	7B(b)	123(b)	Select Recall operation
RCL?	7D	125	Request current channel
RFG(a)	7E(b)	126(b)	Enter RF Gain (0-255)
RFG?	80	128	Request RF Gain
RMT	81	129	Select Remote operation
RMT/	82	130	De-select Remote
RMT?	83	131	Request control mode
SCN(a)	84(b)	132(b)	Select Scan operation
SEG	C0	192	Select SEGMENTED Scan
SEG/	C1	193	De-select SEGMENTED Scan
SEM	C2	194	Segmented Scan Manual
SIZ(a)	C6	198	Set Step size in Scan
SIZ?	C8	200	Request current Step size
SS?	89	137	Request Signal Strength in dBm
STO(a)	8A(b)	138(b)	Store current parameters
STP(a)	8D(b)	141(b)	Select Step operation
STS(a)	90(b)	144(b)	Sets status byte
STS?	92	146	Request device status command

(a) - Utilized in a command as an ASCII number or a group of numbers.
(b) - A single byte of binary information.
(p) - Eight packed BCD digits in four bytes of information.
(_) - Represents the default mode.

Courtesy of http://BlackRadios.terryo.org

Table 2-6. Mnemonics and Binary Codes (Continued)

ASCII	Hex	Dec	Description
TIM(a)	AE	174	Set TIME function
TIM?	B0	176	Request TIME setting
TON?	BC	188	Which TONE mode
USB	93	147	Select USB detection mode
VID(a)	A2(b)	162(b)	Set Video level 0-255
VID?	A4	164	Request Video level

(a) - Utilized in a command as an ASCII number or a group of numbers.
(b) - A single byte of binary information.

2.5.1 DEVICE DEPENDENT COMMANDS

The tables (**Tables 2-7** through **2-13**) that follow provide a more detailed description of the commands listed in **Table 2-6.** The commands and responses are grouped according to their command category and are provided with their ASCII, Hexidecimal and Decimal equivalents.

The command columns depict messages that can be applied to the WJ-8618B(1) Receiver as an active listener. Responses returned are messages returned when the receiver is a talker. ASCII messages may be applied with embedded spaces or any combination of upper and lowercase characters. Refer to **paragraph 2.5,** Remote Operating Characteristics for specific requirements of IEEE-488 operation.

Table 2-7. WJ-8618B(S1) Configuration Commands and Responses

ASCII	Command		ASCII	Response		Description
	HEX	DEC		HEX	DEC	
BIN		84				Causes all future expected commands to be in binary.
	55	85				Causes all future expected commands to be in ASCII (default).
ERR?	65	101	ERR(b)	63(b)	99(b)	Returns a number (0-99) representing the two digit error code.
RMT	81	129				Select remote operation.
RMT/	82	130				Activate local operation.
RMT?	83	131	RMT RMT/	81 82	129 130	Requests control mode (Remote/Local).

(b) - A single byte of binary information.
(__) - Represents the default mode.

Courtesy of http://BlackRadios.terryo.org

Table 2-7. WJ-8618B(S1) Configuration Commands and Responses (Continued)

ASCII	Command		ASCII	Response		Description
	HEX	DEC		HEX	DEC	
STS(a)	90(b)	144(b)				Sets status byte to cause receiver reactions in accordance with the variable (a) sent. Variables are ORed together when multiple STS(a) commands are sent. STS0 must be sent to reset status byte. a = 0- Resets all bits of Status byte to 0 a = 1- Send SRQ on signal acquisition a = 4- Cause receiver to enter into Scan Continue or Step Continue mode on signal acquisition a = 8- Cause receiver to enter into Scan Continue mode at the end of a Scan sequence.
STS?	92	146	STS(a)	90(b)	144(b)	Request device status command. Bit — Function 0 Signal above COR level. 1 Unit power-up or IEEE-488 DCL or SDC activated SRQ. 2 BITE activated SRQ. (Cleared by BIT?). 3 Indicates end of Scan sequence. (Reset by serial poll followed SCN.) 4 Receiver responding to query. 5 Unit error activated SRQ (cleared by ERR?). 6 SRQ activated by this unit (cleared by a serial poll followed by STS?). 7 Not Utilized.

(a) - Utilized in a command as an ASCII number or a group of numbers.
(b) - A single byte of binary information.

Courtesy of http://BlackRadios.terryo.org

Bandwidths for the receiver are applied utilizing the following commands and responses.

Table 2-8. WJ-8618B(S1) Bandwidth Commands and Responses

ASCII	Command		ASCII	Response		Description
	HEX	DEC		HEX	DEC	
BW(a)	4E(b)	78(b)				Select BW slot 105. (WJ-8618B(S1) does not allow selection of empty BW slot.)
BW?	50	80	BW(a)	4E(b)	78(b)	Request which slot is selected. (BW 1 is default.)
BWC?	9E	158	BWC(a)	9E(b)	15E(b)(b)	Request size of selected BW. (Number returned is ASCII is in kHz.) (Number returned in binary is a 2 byte binary number representing kHz.) 6.4 kHz is returned as 6 kHz; 3.2 kHz is returned as 3 kHz.
FBW	---	---				Select full bandwidth increments in SCAN.
FBW/	---	---				Select 1/2 bandwidth increments in SCAN.
FBW?	---	---	FBW FBW/	--- ---	--- ---	Request bandwidth mode selected.

(a) - Utilized in a command as an ASCII number or a group of numbers.
(b) - A single byte of binary information.

Detection modes for the receiver are applied utilizing the following commands and responses.

Table 2-9. WJ-8618B(S1) Detection Commands and Responses

ASCII	Command		ASCII	Response		Description
	HEX	DEC		HEX	DEC	
AM	48	72				Select AM detection mode.
CW	5A	90				Select CW detection mode.
FM	69	105				Select FM detection mode.
PLS	78	120				Select PULSE detection mode.
LSB	72	114				Select LSB detection mode.

(_) - Represents the default mode.

Courtesy of http://BlackRadios.terryo.org

Table 2-9. WJ-8618B(S1) Detection Commands and Responses (Continued)

ASCII	Command		ASCII	Response		Description
	HEX	DEC		HEX	DEC	
USB	93	147				Select USB detection mode.
DET?	5F	95	AM CW FM PLS LSB USB	48 5A 69 78 72 93	72 90 105 120 114 147	Request mode of detection selected.

(_) - Represents the default mode.

Miscellaneous control of the receiver is applied utilizing the following commands and responses.

Table 2-10. WJ-8618B(S1) Miscellaneous Control Commands and Responses

ASCII	Command		ASCII	Response		Description
	HEX	DEC		HEX	DEC	
AFC	42	66				Turn AFC on.
AFC/	43	67				Turn AFC off.
AFC?	44	68	AFC/ AFC	42 43	66 67	Request AFC mode.
AGC	45	69				Turn AGC on.
AGC/	46	70				Turn AGC off.
AGC?	47	71	AGC AGC/	45 46	69 70	Request AGC mode.
ANT(a)	4B(b)	75(b)				Select antenna. (1,2)
ANT?	4D	77	ANT(a)	4B(b)	75(b)	Request which antenna is in use (ANT 1 is default).
CLR	51	81				Clear receiver. All conditions to default. Memory not affected.
CLM	6C	108				Clear receiver. All conditions to default. Memory cleared.

(a) - Utilized in a command as an ASCII number or a group of numbers.
(b) - A single byte of binary information.
(_) - Represents the default mode.

Courtesy of http://BlackRadios.terryo.org

Table 2-10. WJ-8618B(S1) Miscellaneous Control Commands and Responses (Continued)

ASCII	Command		ASCII	Response		Description
	HEX	DEC		HEX	DEC	
COR(a)	57(b)	87(b)				Set COR level (0-40 = on, 41 = off). Level is 1 dB steps starting at noise floor threshold of selected BW.
COR?	59	89	COR(a)	57(b)	87(b)	Request the COR level.
CST?	9B	155				What is COR status?
			CST		153	Signal is above COR.
			CST/		155	Signal is below COR.
DWL(a)	60(b)	96(b)				Select the DWELL time per increment in Scan or Step 0-255, (2y x 8) -8 = dwell time. where: y = a 32
DWL?			DWL(a)	60(b)	96(b)	Request Dwell number. (Dwell 0 is default).
FRQ(f)	3C(P)	60(p)				Set the tuned frequency in MHz. (20-1100 in .0001 MHz steps.) (Binary mode is packed BCD always 4 bytes.) (Upper limit 500 MHz without FE option.)
FRQ?	3E	62	FRQ(f)	3C(p)	60	Request tuned frequency. (20 MHz is default.)
RFG(a)	7E(b)	126(b)				Enter RF Gain number (0-255.) 0 = minimum gain, 255 = maximum gain.
RFG?	80	128	RFG(a)	7E(b)	126(b)	Request RF Gain number. (The RF Gain 0 is default.)

(a) - Utilized in a command as an ASCII number or a group of numbers.
(b) - A single byte of binary information.
(f) -- tilized in a command as a group of ASCII numbers representing a frequency. This should not exceed 10 characters, including sign and decimal. Leading and trailing zeros need not be sent.
(p) - Eight packed BCE digits in four bytes of information.
(_) - Represents the default mode.

Courtesy of http://BlackRadios.terryo.org

Control of the receiver is applied utilizing the following commands and responses.

Table 2-11. WJ-8618B(S1) Receiver Mode Control Commands and Responses

ASCII	Command		ASCII	Response		Description
	HEX	DEC		HEX	DEC	
MAN	75	117				Select Manual operation (to exit Scan or Step, send MAN twice).
STO(a)	8A(b)	138(b)				Store current parameters in channel (0-95).
RCL(a)	7B(b)	123(b)				Select Recall operation. Recall parameters in channel (0-95).
RCL?	7D	125	RCL(a)	7B(b)	123(b)	Request current channel number
EXC	66	102				Execute current parameters (used with Recall mode).
SCN(a)	84(b)	132(b)				Select Scan operation. If odd, Scan from preceding even number. If even, Scan from 0.
STP(a)	8D(b)	141(b)				Select Step operation. Start with 0 and Step to number in STP command.
MOD?	B3	179				Request mode of operation.
			MAN	75	117	Manual
			RCL	7B	123	Recall
			SCN	84	132	Scanning
			SCM	B2	178	Scan Continue
			STP	8D	141	Stepping
			STM	B1	177	Step Continue

(a) - Utilized in a command as an ASCII number or a group of numbers.
(b) - A single byte of binary information.
(_) - Represents the default mode.

Courtesy of http://BlackRadios.terryo.org

Signal information for the receiver is applied utilizing the following commands and responses

Table 2-12. WJ-8618B(S1) Signal Information Commands and Responses

ASCII	Command		ASCII	Response		Description
	HEX	DEC		HEX	DEC	
AM?	4A	74	AM(a)	48(b)	72(b)	Request reading from AM modulation. 000-068 range.
FM?	6B	107	FM(a)	69(b)	105	Request reading from FM modulation. 000-100 range
FMO?	AD	173	FMO(a)	AB(b)	171(b)	Request reading of FM offset. 000-255 range.
LGV?	71	113	LGV(a)	6F(b)	111	Request reading of Log Video. 000-080 range
SS?	89	137	SS(a)	87(b)	135(b)	Request reading of Signal Strength in dBm. (In manual, gain represents % of AM Detector (000-100)).

(a) - Utilized in a command as an ASCII number or a group of numbers.
(b) - A single byte of binary information.

Courtesy of http://BlackRadios.terryo.org

Optimal commands are applied to the receiver utilizing the following commands and responses.

Table 2-13. WJ-8618B(S1) Optional Commands and Responses

ASCII	Command		ASCII	Response		Description
	HEX	DEC		HEX	DEC	
BITE	OPTION					
BIT(a)	A5(b)	165				Cause BITE to start or continue.
BIT?	A7	167	BIT(a)	A5(b)	165	Request BITE error number. (0 = no error)
BIC?	AA	170	BIC(a)	A8(b)	168	Request reading of error.
BFO	OPTION					
BFO(f)	39(p)	57(p)				Set BFO frequency in kHz. (-7.99 to +7.99). Binary is sent as four packed BCD bytes. (Sign is bit 3 of second byte.) First and last byte are zeros.
BFO?	3B(p)	59	BFO± (f)	39(p)	57	Request BFO frequency. (0 kHz is default)
LOCK-	OUT					
LCK	94	148				Lock-Out current parameters.

(a) - Utilized in a command as an ASCII number or a group of numbers.
(b) - A single byte of binary information.
(f) - Utilized in a command as group os ASCII numbers representing a frequency. This should not exceed 10 characters, including sign and decimal. Leading and trailing zeros need not be sent.
(p) - Eight packed BCD digits in four bytes of information.
(_) - Represents default mode.

Courtesy of http://BlackRadios.terryo.org

The response to an AM? mnemonic is a number from 000 to 068 representing the level of AM Video present at the output of the receiver. Each digit represents approximately 13 mV rms of AM Video. For FM?, the response is a number ranging from 000 to 100, representing the percentage of FM modulation. Each digit represents a 1 percent increment with 100 equalling 100% modulation and 000 equalling no modulation. For FMO?, the response is a number from 0-255, representing the FM Discriminator offset. The number 127 represents a signal at tuned frequency, greater than 127 means the signal is greater than the tuned frequency, less than 127 means the signal is lower than the tuned frequency. For tuned frequencies above 500 MHz (with the frequency extender installed), greater than 127 means the signal is lower than the tuned frequency and less than 127 means the signal is greater than the tuned frequency.

LGV? provides a number from 000 to 080 representing the Log Video level of the receiver. This number represents the signal level above the theoretical noise floor of the receiver, with each number representing a 0.5 dB change. 000 represents the theoretical noise floor and 080 represents 40 dB above that level.

The response to SS? provides a signal strength number in dBm from -125 to -20. In manual gain this number represents the level of the AM detector.

The WJ-8618B(S1) Receiver is capable of activating the SRQ line indicating controller service is required. Four different stimuli cause the receiver to set the SRQ line indicating the reasons for this assertion. These include: errors, power-up, clear and signal activity. If an error occurs during operation of the receiver, it sets the SRQ line and bits 5 and 6 of the status byte. If the BITE option is installed, the completion of BITE or upon an error acquisition, SRQ is set with bits 2 and 6 of the status byte. When the receiver is powered-up or sent SDC or DCL commands, it sets SRQ and bits 1 and 6 of the status byte.

The remaining stimuli that cause the SRQ line to become active is the acquisition or loss of a signal (signal level above or below COR level). This sets bit 6 of the status byte. Signal activity SRQ must be enabled by sending STS 1 to enable this interrupt.

A serial poll clears the SRQ line as defined by the IEEE-488 specification. The status byte read by the computer while doing the serial poll is defined as follows:

Bit	Set Indicates	Cleared Indicates	Cleared By
0	Signal above COR	No signal above COR	Non-latched indicator
1	Unit Power-up SRQ		Requesting receiver status (device dependent command)
2	BITE complete or error found		Requesting BITE status (device dependent command)
3	End of Scan sequence (when status byte previously set with STS 8)		Reset by serial poll followed by SCN.
4	Responding to request for data		Non-latched indicator

Courtesy of http://BlackRadios.terryo.org

Bit	Set Indicates	Cleared Indicates	Cleared By
5	Error condition occurred	Error condition cleared	Requesting Error status (device dependent command)
6	SRQ has occurred	SRQ not active from this device	Requesting Receiver status or error status (device dependent command)

As a response to an STS? instruction or serial poll, a status byte is returned to indicate the receiver status. This response is a three-digit decimal number that corresponds to the binary number contained in the returned byte (0 = 00000000 127 = 01111111).

2.5.2 EXAMPLES OF REMOTE OPERATION

The examples that follow (**Tables 2-14** through **2-19**) provide examples of control operations, using an HP85 as a controlling device. These examples are shown in the ASCII and binary modes. Similar type messages will use a similar format.

Table 2-14. Sending a Tuned Frequency of 25 MHz to the WJ-8618B(S1) Using an HP85 (WJ-8618B(S1) Device #6)

Message: Send tuned frequency of 25.0000 MHz

ASCII Mode	Actual Bus Transfer					
	#	ATN	EOI	HEX	ASCII	Comment
Output 706 using "K"; "FRQ25"	1	1	0	3F		UNLISTEN
	2	1	0	55		HP-85 TALK
ASCII message may have leading zeros.	3	1	0	26		8615 LISTEN
Total none blank character count 15,	4	0	0	46	F	
for single commands, exponential	5	0	0	52	R	
format not supported. IE: "FRQ	6	0	0	51	Q	
0025.0000 is valid message.	7	0	0	32	2	
EOI may be the terminator.	8	0	0	35	5	
	9	0	0	0D	(CR)	
	10	0	0	0A	(LF)	
Binary Mode	**#**	**ATN**	**EOI**	**HEX**	**DEC**	**Comment**
*Print using "B"; 60, 0, 37, 0, 0	1	1	0	3F		UNLISTEN
	2	1	0	55		HP-85 TALK
All bytes must be sent with no spaces	3	1	0	26		8618B LISTEN
or terminator characters.	4	0	0	36	60	FREQ CODE
	5	0	0	00	0	BYTE 1
	6	0	0	25	37	BYTE 2
	7	0	0	00	0	BYTE 3
	8	0	1	00	0	BYTE 4

*Control Statement: Control 7, 16; 128 (sets HP85 to EOI terminator for printer messages).
Printer is 706 (directs print statements to WJ-8618B(S1)).

Courtesy of http://BlackRadios.terryo.org

Table 2-15. Sending a COR "OFF" Command

Message: Send COR Off (41)

ASCII Mode	Actual Bus Transfer					
	#	ATN	EOI	HEX	ASCII	Comment
Output 706 using "K"; "COR 41"	1	1	0	3F		UNLISTEN
	2	1	0	55		HP-85 TALK
	3	1	0	26		8618 LISTEN
	4	0	0	43	C	
	5	0	0	4F	O	
	6	0	0	52	R	
	7	0	0	34	4	
	8	0	0	31	1	
	9	0	0	0D	(CR)	
	10	0	0	0A	(LF)	
Binary Mode	**#**	**ATN**	**EOI**	**HEX**	**DEC**	**Comment**
*Print using "B"; 87, 41	1	1	0	3F		UNLISTEN
	2	1	0	55		HP-85 TALK
	3	1	0	26		8618B LISTEN
	4	0	0	57	87	COR CODE
	5	0	1	29	41	VALUE

*Control Statement: Control 7, 16; 128 (sets HP85 to EOI terminator for printer messages).
Printer is 706 (directs print statements to WJ-8618B(S1)).

Courtesy of http://BlackRadios.terryo.org

Table 2-16. Sending a Frequency Request

Message: Request Frequency (Assume 25 MHz last sent)

ASCII Mode	Actual Bus Transfer					
	#	ATN	EOI	HEX	ASCII	Comment
Output 706 using "K"; "FRQ?"	1	1	0	3F		UNLISTEN
	2	1	0	55		HP-85 TALK
Instruct WJ-8618B(S1) to prepare to output	3	1	0	26		8618B LISTEN
frequency information when made a talker.	4	0	0	46	F	
	5	0	0	52	R	
	6	0	0	51	Q	
	7	0	0	3F	?	
	8	0	0	0D	CR	
	9	0	0	0A	LF	
Enter 706; A$	10	1	0	3F		UNLISTEN
	11	1	0	35		HP-85 LISTEN
	12	1	0	46		8618B TALK
	13	0	0	46	F	
	14	0	0	52	R	
	15	0	0	51	Q	
A$ will contain "FRQ 0025.0000".	16	0	0	20		
	17	0	0	30	0	
	18	0	0	30	0	
	19	0	0	32	2	
Frequency response is always 15	20	0	0	35	5	
characters.	21	0	0	2E	.	
	22	0	0	30	0	
	23	0	0	30	0	
	24	0	0	30	0	
	25	0	0	30	0	
	26	0	0	0D	CR	
	27	0	0	0A	LF	
Binary Mode	**#**	**ATN**	**EOI**	**HEX**	**DEC**	**Comment**
*Print using "B"; 62	1	1	0	3F		UNLISTEN
	2	1	0	55		HP-85 TALK
	3	1	0	26		8618B LISTEN
	4	0	1	3E		REQUEST FREQUENCY
Enter 706 using "#%, #%K"; A$		1	0	3F		UNLISTEN
		1	0	35		HP-85 LISTEN
Image causes enter to terminate on EOI		1	0	46		8618B TALK
only.		0	0	3C	60	FREQ CODE
		0	0	00	0	BYTE 1
A$ will contain frequency data in packed		0	0	25	37	BYTE 2
BCD.		0	0	00	0	BYTE 3
		0	1	00	0	BYTE 4

*Control Statement: Control 7, 16; 128 (sets HP85 to EOI terminator for printer messages).
Printer is 706 (directs print statements to WJ-8618B(S1)).

Courtesy of http://BlackRadios.terryo.org

Table 2-17. Sending a Bandwidth Size Request
Message: Request size of currently selected bandwidth (Assume 10 kHz)

ASCII Mode	Actual Bus Transfer					
	#	ATN	EOI	HEX	ASCII	Comment
Output 706 using "K"; "BWC?"	1	1	0	3F		UNLISTEN
	2	1	0	55		HP-85 TALK
Instruct 8618B to output size of	3	1	0	26		8618B LISTEN
selected BW in kHz when made an	4	0	0	42	B	
active talker.	5	0	0	57	W	
	6	0	0	43	C	
	7	0	0	3F	?	
	8	0	0	0D	(CR)	
	9	0	0	0A	(LF)	
Enter 706; A$	10	1	0	3F		UNLISTEN
	11	1	0	35		HP-85 LISTEN
A$ will contain "BWC... 10".	12	1	0	46		8618B TALK
	13	0	0	42	B	
	14	0	0	57	W	
	15	0	0	43	C	
	16	0	0	20		
	17	0	0	20		
	18	0	0	31	1	
	19	0	0	30	0	
	20	0	0	0D	(CR)	
	21	0	0	0A	(LF)	
	(Assume 4 MHz)					
Enter 706; A$	10	1	0	3F		UNLISTEN
	11	1	0	35		HP-85 TALK
A$ will contain "BWC 4000".	12	1	0	46		8618B LISTEN
	13	0	0	42	B	
	14	0	0	57	W	
	15	0	0	43	C	
	16	0	0	34	4	
	17	0	0	36	0	
	18	0	0	30	0	
	19	0	0	30	0	
	20	0	0	30	(CR)	
	21	0	0	0D	(LF)	
Binary Mode	**#**	**ATN**	**EOI**	**HEX**	**DEC**	**Comment**
*Print using "B"; 158	1	1	0	3F		UNLISTEN
	2	1	0	55		HP85 TALK
	3	1	0	26		8618B LISTEN
	4	0	1	9E	158	BW SIZE REQUEST
Enter 706 using "#%, #%K"; A$	5	1	0	3F		UNLISTEN
	6	1	0	B5		HP-85 LISTEN
	7	1	0	46		8618B TALK
A$ will contain binary BW size	8	0	0	9C	156	BW CODE
information.	9	0	0	00	0	BINARY CODED
	10	0	1	0A	10	BANDWIDTH IN kHz
	(Assume 4 MHz)					
Enter 706 using "#%, #%K"; A$	5	1	0	3F		UNLISTEN
	6	1	0	35		HP-85 LISTEN
Byte 1, Byte 2	7	1	0	46		8618B TALK
	8	0	0	9C	156	BW CODE
A$ will contain binary BW size	9	0	0	0F	15	BINARY CODED
information.	10	0	1	A0	160	BANDWIDTH IN kHz

*Control Statement: Control 7, 16; 128 (sets HP85 to EOI terminator for printer messages).
Printer is 706 (directs print statements to WJ-8618B(S1)).

Courtesy of http://BlackRadios.terryo.org

Table 2-18. Sending a Detection Mode Request

ASCII Mode	Actual Bus Transfer					
	#	ATN	EOI	HEX	ASCII	Comment
Output 706 using "K"; "DET?"	1	1	0	3F		UNLISTEN
	2	1	0	55		HP-85 TALK
	3	1	0	26		8618B LISTEN
	4	0	0	44	D	
	5	0	0	45	E	
	6	0	0	54	T	
	7	0	0	3F	?	
	8	0	0	0D	(CR)	
	9	0	0	0A	(LF)	
Enter 706; A$	10	1	0	3F		UNLISTEN
	11	1	0	35		HP-85 LISTEN
	12	1	0	46		8618B TALK
	13	0	0	41	A	
A$ will contain "AM".	14	0	0	4D	M	
	15	0	0	20		
	16	0	0	0D		
	17	0	1	0A		
	(Assume PLS)					
Enter 706; A$	10	1	0	3F		UNLISTEN
	11	1	0	35		HP-85 TALK
A$ will contain "PLS".	12	1	0	46		8618BLISTEN
	13	0	0	50	P	
	14	0	0	4C	L	
	15	0	0	53	S	
	16	0	0	0D	(CR)	
	17	0	0	0A	(LF)	
Binary Mode	**#**	**ATN**	**EOI**	**HEX**	**DEC**	**Comment**
*Print using "B"; 95	1	1	0	3F		UNLISTEN
	2	1	0	55		HP85 TALK
	3	1	0	26		8618B LISTEN
	4	0	1	5F		REQUEST DETECTION MODE
Enter 706 using "#%, #%K"; A$	5	1	0	3F		UNLISTEN
	6	1	0	35		HP-85 TALK
A$ will contain 1 byte binary	7	1	0	46		8618B UNLISTEN
information	8	0	0	48		AM CODE
	(Assume PLS)					
Enter 706 using "#%, #%K"; A$	5	1	0	3F		UNLISTEN
	6	1	0	35		HP-85 TALK
A$ will contain 1 byte binary	7	1	0	46		8618B LISTEN
information.	8	0	1	78		PLS CODE

*Control Statement: Control 7, 16; 128 (sets HP85 to EOI terminator for printer messages).
Printer is 706 (directs print statements to WJ-8618B(S1)).

Courtesy of http://BlackRadios.terryo.org

Table 2-19. Sending a COR Level Request

Message: Request COR level, (Assume off)

ASCII Mode	Actual Bus Transfer					
	#	ATN	EOI	HEX	ASCII	Comment
Output 706 using "K"; "COR?"	1	1	0	3F		UNLISTEN
	2	1	0	55		HP-85 TALK
	3	1	0	26		8618B LISTEN
	4	0	0	43	C	
	5	0	0	4F	O	
	6	0	0	52	R	
	7	0	0	3F	?	
	8	0	0	0D	CR	
	9	0	0	0A	LF	
Enter 706; A$	10	1	0	3F		UNLISTEN
	11	1	0	35		HP-85 LISTEN
	12	1	0	46		8618B TALK
	13	0	0	43	C	
	14	0	0	4F	O	
	15	0	0	52	R	
A$ will contain "COR 041".	16	0	0	20		
	17	0	0	30	0	
	18	0	0	34	4	
	19	0	0	31	1	
	20	0	0	0D	(CR)	
	21	0	0	0A	(LF)	
Binary Mode	**#**	**ATN**	**EOI**	**HEX**	**DEC**	**Comment**
		1	0	3F		UNLISTEN
*Print using "B"; 89		1	0	55		HP-85 TALK
		1	0	26		8618B LISTEN
		0	1	59	89	REQUEST COR
Enter 706 using "#%, #%K"; A$		1	0	3F		UNLISTEN
		1	0	35		HP-85 LISTEN
A$ will contain 2 bytes binary		1	0	46		8618B TALK
information		0	0	57	87	COR CODE
		0	1	29	41	VALUE

*Control Statement: Control 7, 16; 128 (sets HP85 to EOI terminator for printer messages).
Printer is 706 (directs print statements to WJ-8618B(S1)).

Courtesy of http://BlackRadios.terryo.org

2.6 PREPARATION FOR RESHIPMENT

If the unit must be prepared for reshipment, the packaging methods should follow the pattern established in the original shipment. If retained, the original materials can be reused to a large extent or at least provide guidance for the repackaging effort.

Courtesy of http://BlackRadios.terryo.org

Courtesy of http://BlackRadios.terryo.org

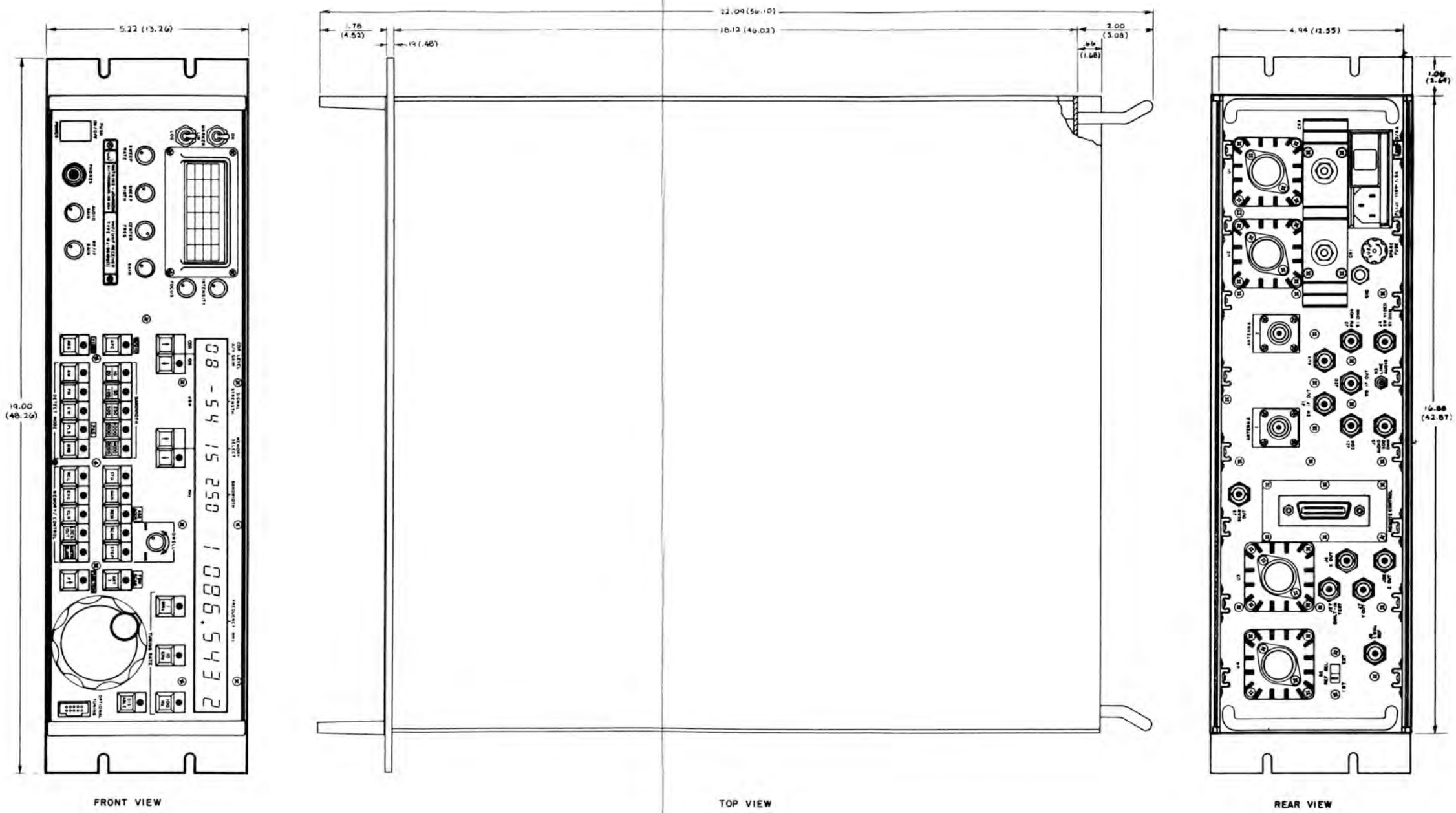

Figure 2-~~4~~3. WJ-8618B(S1) VHF/UHF Receiver Outline Drawing

Courtesy of http://BlackRadios.terryo.org

SECTION III

CIRCUIT DESCRIPTION

Courtesy of http://BlackRadios.terryo.org

Courtesy of http://BlackRadios.terryo.org

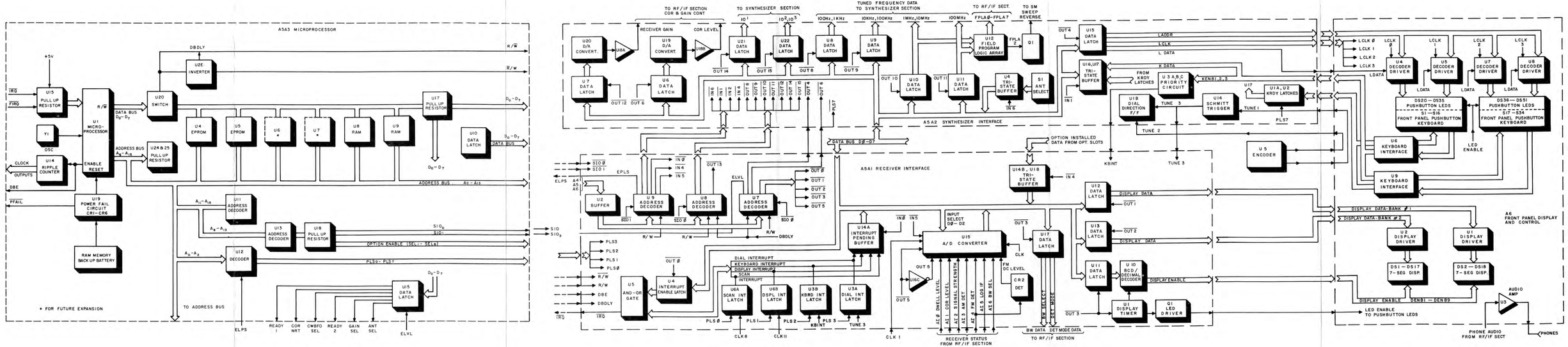

Figure 3-1. **Digital Control Section Functional Block Diagram**

Courtesy of http://BlackRadios.terryo.org

SECTION III

CIRCUIT DESCRIPTION

3.1 GENERAL

The operating circuitry of the WJ-8618B(S1) Receiver is contained in four main sections. Each section contains the circuitry required to perform a specific portion of the overall receiver operation. The sections are interconnected, via the main chassis, by a network of control and signal lines to permit the various sections to perform as a single unit, under the control of the Digital Control Section. Operation of the Digital Control, RF/IF, Synthesizer and Power Distribution sections are described in the paragraphs that follow. Reference should be made to the functional block diagrams, provided in this section, and to the schematic diagrams, provided in **Section VI**, to supplement the circuit descriptions.

The unit numbering method is utilized for the identification of electrical components within this receiver. Parts on the various subassemblies carry a prefix before the usual class letter and item number, such as A3A1 or A4A1Q1. These prefixes, which identify the subassembly, are omitted in the circuit descriptions and illustrations, except where confusion might result from their omission.

3.2 DIGITAL CONTROL SECTION

3.2.1 FUNCTIONAL DESCRIPTION

The Digital Control Section consists of the Front Panel Display and Control (A6) and the subassemblies installed on the Digital I/O Motherboard (A5). This microprocessor controlled section continuously monitors the operation of the receiver and provides control signals to direct its operation. The primary subassemblies responsible for controlling the receiver are Microprocessor A5A3, Synthesizer Interface A5A2, Receiver Interface A5A1 and Front Panel Display and Control A6. These subassemblies and their interconnections are illustrated in the Digital Control Section Functional Block Diagram, **Figure 3-1.** In addition to the primary control subassemblies, the Digital I/O Motherboard provides six option slots that accept up to six additional digitally controlled subassemblies which extend the control capabilities and provide enhancements to the operation of the receiver.

The Microprocessor (A5A3) performs the task of controlling the operation of the receiver by providing control signals to the various receiver circuits and monitoring the receiver operation. This subassembly consists of a microprocessor, a list of operating instructions contained in 32 K bytes of ROM (Read-Only-Memory) and 4 K bytes of RAM (Random-Access-Memory) where the microprocessor can store and retrieve variable data as required, as it performs its control function. Under the direction of the program, the microprocessor continuously monitors the receiver operation and checks the status of the interrupt latches on the receiver interface. If the interrupt latches indicate that the receiver operation should be updated due to parameter changes or if the front panel display must be updated, the operation of the microprocessor is interrupted and it enters into an appropriate subroutine to perform the required task.

Courtesy of http://BlackRadios.terryo.org

Communication between the microprocessor and the other subassemblies on the Digital I/O Motherboard is established using the microprocessor's 16-line address bus and 8-line data bus. Each of the input and output circuits on the Receiver Interface and Synthesizer Interface as well as each of the option slots is assigned a specific address. By placing the appropriate address on the address bus, the microprocessor communicates with the desired location using the data bus.

3.2.2 DETAILED CIRCUIT DESCRIPTION

3.2.2.1 Type 796353-X Microprocessor (A5A3)

The reference designation for the Microprocessor subassembly is A5A3. Refer to **Figure 6-28** for the Type 796353-X Microprocessor schematic diagram.

Integrated circuit U1 is the MC68B09 Microprocessor unit. Pins 5(BS) and 6(BA) of the microprocessor are not used. The IRQ* input (pin 3) is the interrupt and momentarily halts operation of the microprocessor. Data bus lines D0-D7 (pins 24-31) form the 8-bit bidirectional data bus. These eight lines transfer data between the microprocessor (U1), the EPROMS (U4 and U5), the RAMs (U8 and U9), the latch (U15) and via the bus transceiver (U10) to the Digital Motherboard (A5). Data bus lines are utilized to read data from and to write data into the input and output circuits of the Digital Control Section. The read/write (R/ W*) line (pin 32) determines whether the selected device is read from or written to via its logic level. When pin 32 is high, the microprocessor is in the read mode and when pin 32 is low, the microprocessor is in the write mode.

In the read mode, the high at U1 pin 32 is applied through U20 to connector pin B14 and inverted through U2E to a low. This low is applied to the output enable of EPROMs U4 and U5 and also to NAND gate U22A. A low at the output enable (pin 22) of U4 and U5 enables data to be read from them when the chip enable (pin 20) is low. NAND gate U22A applies a high to the write enable (pin 21) of the RAMs (U8 and U9) and also to the direction control (pin 1) of bus transceiver U10. A high at pin 1 of U10 allows data to be transferred from the A data ports (pins 2-9) to the B data ports (pins 11-18), providing the enable line (pin 19) from the PROM (U11) is low. Direction of data flow through U10 is from the B data ports to the A data ports when the enable and the direction lines are both low.

In the write mode, the output at U1 pin 32 is low. This low is directed through U20 to connector pin B14 and through inverter U2E to the enable line (pin 22) of the EPROMs as a high. Through NAND gate U22A, the high becomes a low at the write enable (pin 21) of RAMs U8 and U9. A high at the EPROMs output enable prevents data from being written into the EPROMs. A low on the write enable (pin 21) of RAMs U8 and U9 enables the microprocessor to write data into the RAMs when the chip select (pin 18) is low. The same low applied to the RAMs is also applied to pin 1 of the bus transceiver (U10), enabling data at the B data ports to be transferred to the A data ports.

The address bus A0-A15 (pins 8-23) is utilized to output address information to the memory devices (U4-U9, U11 and U13), the motherboard and the decoder/demultiplexer (U12). Decoder/demultiplexer U12 receives three address lines, A0-A2, from the microprocessor. These three address line inputs are decoded, enabling one of the eight outputs from U12. When an output from U12 is enabled, its output line is low. The address bus is also applied to PROMs U11 and U13. From U13 the address bus is applied through pull-up resistor U18 to the connector pins.

*Indicates Active Low.

Courtesy of http://BlackRadios.terryo.org

Microprocessor U1 has an external parallel-resonant crystal (Y1). The crystal oscillator circuit, composed of Y1, C19 and C20, is resonant at 4 MHz. This 4 MHz signal is utilized by the microprocessor internal oscillator circuit to produce 1 MHz clocks at the E (enable, pin 34) and Q (quadrature pin 35) outputs. These two clock outputs are directed to integrated circuits U3A, U3C, U14, U19C and U22B to be utilized for timing and synchronizing digitally controlled functions. Integrated circuit U14 is a binary divider which divides the DBE (data bus enable) clock to provide the CLK 1, CLK 5, CLK 8 and CLK 11 outputs to the digital section. CLK 1 is equal to DBE ÷ 2 (500 kHz) and is supplied to the Receiver Interface to clock the circuitry supplying the receiver status inputs to the microprocessor. CLK 8 and CLK 11 are equal to DBE ÷ 256 and DBE ÷ 2048 respectively and are supplied to the Receiver Interface to generate interrupt requests to the microprocessor. CLK 5 (DBE ÷ 32) is routed off of the Microprocessor board via board terminal A18 and is supplied to Option Slot 2 on the motherboard to be used when the Digital Refresh Display subassembly is installed. The RAM clock is supplied to the on board RAM, via U19C and is also present at connector pin A4 for use with the RAM option, when installed.

Supply voltages to the microprocessor and memory devices are provided via voltage regulator U21 and the associated components. The +15 V at connector pin B42 is applied to voltage regulator U21 through R6. Decoupling is provided by C23 and C24. CR3, connected to pin 3 of U21, increases the regulator output voltage by 0.7 V to compensate for the voltage drop across CR4. The output +5 V, from regulator U21, is applied to connector pin A6 and to U19. This regulated +5 V is also applied through current limiting resistor R7 and forward biased diodes CR5 and CR6 to supply the charging current for the battery back-up. When power to the receiver is turned off, the back-up battery forward biases CR7 and applies approximately 3.6 V through R7 to the RAMs (U8 and U9) and to U11. This back-up battery prevents the data stored in the RAMs from being lost and also places the RAMs in the high impedance mode to reduce current drain on the battery.

The power fail circuit, comprised of VR1, U19A, U19B and their associated circuitry, is utilized to disable microprocessor operations when power drops below reliable levels. Unregulated +9 V, from connector pin 30, is applied through zener diode VR1 to variable resistor R2. Resistor R2 is set to prohibit voltages below a usable level from causing faulty microprocessor operation. When the unregulated voltage drops below the level set by R2, the level at U19A pin 2 is low. This low produces a high at the output (pin 3) which forward biases CR2. This high charges C22 and is applied to pins 4 and 5 of U19B which produces a low at the output, pulling the microprocessor reset line (pin 37) low through CR1 and halting its operation. The low on the reset line is applied through U3B and inverted through U2D and appears at connector pins B8 and B10 respectively, as a low and high.

When the unregulated +9 V rises to a sufficient level to overcome the bias level set by R2, a high is applied to pin 2 of NAND gate U19A. The output of U19A (pin 3) is a low that reverse biases CR2 and caused C22 to discharge through R5. After C22 discharges, the low at the inputs of U19B produces a high at the output (pin 6) and the microprocessor reset line (pin 37) returns high. With the microprocessor reset line high, the microprocessor resumes operation.

Courtesy of http://BlackRadios.terryo.org

3.2.2.2 Type 794108-X Receiver Interface (A5A1)

The reference designation for this subassembly is A5A1. Refer to **Figure 6-26** for the Type 794108-X Receiver Interface schematic diagram.

The Receiver Interface decodes address information from the microprocessor to enable input and output circuits throughout the Digital Control Section. The address decoders, comprised of U7, U8 and U9, decode the address information on address lines A4 through A6 of the address bus to enable the appropriate circuit in accordance with the address. Sections D, E and F of inverter U2 buffer the address lines to prevent loading by the decoders. The decoders are enabled by the SIO0*, SIO1*, R/W and R/W* outputs from the microprocessor, causing U7 and U8 to be enabled when the microprocessor is in a write mode and U9 to be enabled in a read mode. The DBE and DBDLY clocks provide the final enabling pulses to the decoders. U7 and U8 are enabled by the DBDLY clock from the Microprocessor subassembly to delay the enabling of the output devices until the data from the microprocessor is present on the data bus. The outputs of the address decoders are provided to the enable or clock inputs of the various interface circuits of the Digital Control Section. The four digit numbers, in parentheses at the decoder output lines, represent the hexadecimal address that enables that line.

Tri-state buffers U14B and U18 provide inputs to the data bus, indicating which optional subassemblies are installed in the receiver. The OPT 0 input connects the optional tuning jack on the front panel and OPT1 connects to the VBFO connector on the Synthesizer Motherboard (A4). The remaining inputs, OPT 2 through OPT 6, are wire wrapped to the option slots on the Digital I/O Motherboard. When an option is installed in the receiver, the appropriate OPT input is connected to +5V. If no option is installed, that input is tied to ground via R29, R30 or R31. When a Read Address 1040 is output by the microprocessor, the option data is placed on the data bus to be read by the microprocessor.

Integrated circuits U10 through U13 and U1 control the seven-segment LED display on the front panel. The display is multiplexed by the microprocessor which causes each digit of the display to be turned on for only a short period of time, at the end of which the next digit is turned on. The multiplexing occurs at a high speed so that each digit appears to be on continuously. The digits are divided into two groups of nine each and are enabled in pairs by decoder U10. U11 latches data from the data bus to drive U10. The output of U10 goes to the Front Panel Display and Control (A6) to drive the nine pairs of display LEDs. Resistors R17 and R18 limit the current at the decoded outputs to prevent damage to U10. Latches U12 and U13 supply the data to the individual segments of the digital display. U12 supplies data to group 1 and U13 supplies data to group 2. When the microprocessor updates the display, it writes data into U12, corresponding to the LED segments to be lit in group 1 and then writes data into U13 corresponding to the group 2 segments to be lit. It then writes the number of the digit pair that is being updated into U11 to drive decoder U10. For example, if the first pair of digits is being updated, a 1 is written into U11, which enables the DENB1 output of U10.

The brightness of the display is controlled by the length of time that the seven-segment LEDs are enabled. This time is controlled by timer U1. When data is clocked into U11, the timer (U1) is also activated causing the Q* output to go low to enable U11. The RC network consisting of C1, R2 and the adjustment of R1 determines the length of time that U11 is enabled, thereby determining the brightness of the display. The second output of U1 is inverted by U2A and is used to turn on Q1 during the time that U1 is timing. This controls the length of the pulses that go to the LEDs on the front panel pushbuttons, thus controlling their intensity. Resistors R16 and R15 place +5 V at the C and D inputs of U10 when U11 is disabled, placing a 12 at the

Courtesy of http://BlackRadios.terryo.org

input of U10, which does not enable any of the outputs. This causes the display driven by U10 to be enabled only during the time that U1 is timing.

Integrated circuit U17 latches bandwidth and detect mode data from the data bus to its outputs to provide the outputs to the RF/IF Motherboard. When the microprocessor updates this information, it writes the data into hexadecimal address 1150, which places the new data into U17. U17 then provides this data to the RF/IF Motherboard to select the IF bandwidth and the detection mode.

U6 and U3 are D-type flip-flops which are used to latch interrupts. These interrupts signal the microprocessor to jump to a subroutine and perform the task required by the requesting circuits. U6A is set every 256 μsec by the positive transition of clock 8 from the microprocessor. This is used to generate the Scan when the receiver is in the Scan mode. After the Scan, the microprocessor resets the Scan interrupt by generating a PLS0* which is generated on the microprocessor board. U6B generates a display interrupt on the positive transition of clock 11, which occurs every 2 msec. The display interrupt controls the updating of the display information on the front panel. When the update is complete, U6B is cleared by a PLS1* from the microprocessor. U3B generates an interrupt which comes from the keyboard, via the Synthesizer Interface subassembly. After the completion of the keyboard interrupt, this flip-flop is reset by a PLS2*. U3A is set by the TUNE 3 input which is generated on the Synthesizer Interface. The TUNE 3 input is present each time the tuning wheel is rotated and generates the interrupt to signal the microprocessor to update the frequency display on the front panel. This flip-flop is reset by a PLS3* from the microprocessor.

The outputs of U3 and U6 are applied to U5 and U14A. Tri-state buffer U14A places the data from the flip-flops onto the data bus when the microprocessor reads address 1000. This permits the microprocessor to monitor the status of U3 and U6. Hex-latch U4 is written into by the microprocessor when it writes into address 1000. The outputs from U4 then go to U5 to permit the interrupts to generate the IRQ* pulse to interrupt the microprocessor. U5, an AND-OR-INVERT gate, generates the IRQ* output when the two inputs of one of its input pairs are high. For example, if the Scan interrupt flip-flop is set and the input to U5 corresponding to D7 is high, U5 generates a Scan interrupt. The interrupt will be generated only if the Scan interrupt and D7 inputs are both high. This is also true for the Display, Keyboard and Dial interrupts and their corresponding data input lines. Data bits D3 and D2 are used to generate interrupts requested by options. The INT* EXT* input to the board generates the IRQ* output when an interrupt is requested by an option.

U15 is an analog-to-digital converter (ADC) which is used to convert analog data from various receiver circuits into digital form to be read by the microprocessor. IN0 through IN7 are the analog inputs from the receiver. These inputs are selected by data lines D0 through D2 when the microprocessor writes into address 1050. Data lines D0 through D2 select one of the seven analog inputs via the address inputs (A0 through A2) of U15. When the microprocessor reads address 1050, digital data representing the selected input is supplied to the microprocessor via the Data bus.

The IN0 input to U15 is connected to the wiper of the Dwell potentiometer on the front panel and supplies a voltage representing the Dwell setting. IN1 connects to the front panel RF/IF gain potentiometer and supplies a voltage representing its setting. A voltage representing the signal strength is supplied to IN2 by the receiver. A signal from the AM detector of the receiver is supplied to IN3 via the peak detector formed by CR1, R19 and C15. This supplies a voltage to U15 representing the peak amplitude of the AM detector. C21 and R6 couple the AM signal to the peak detector. The FM detector output is supplied to IN4 and also to IN7 via the peak detector formed by CR2, R14 and C2. This supplies the dc level of the FM detector to IN4,

Courtesy of http://BlackRadios.terryo.org

which tells the microprocessor if the receiver is on frequency, and the peak amplitude to IN7. C20 and R13 couple the FM detector signal to the peak detector. IN5 receives a LOG IF signal from the receiver which indicates the IF signal strength. The input to IN6 is a voltage representing the IF bandwidth selected. This voltage is generated by a potentiometer on each IF Amplifier which is adjusted to a voltage representing its IF bandwidth. R22 through R24 and R26 through R28 are current limiting resistors, used to protect U15. R24, R27 and R28 also form voltage dividers with R12, R7 and R21, respectively, to reduce their inputs to levels within U15's range.

3.2.2.3 Type 796321-1 Synthesizer Interface (A5A2)

The reference designation for this subassembly is A5A2. Refer to **Figure 6-27** for the Type 796321 Synthesizer Interface schematic diagram.

The circuit comprised of U1A, U2A and U2B form part of the circuitry used to interface the front panel keyboard with the microprocessor. These D-type flip-flops latch the ready pulses, from the front panel (KRDY and KRDY2) or the optional external Pluggable Keyboard Control (KRDY3), whenever a pushbutton is depressed. The front panel pushbuttons are arranged in two banks, each providing a separate ready pulse. KRDY1 is supplied by the first bank of pushbuttons and the second bank supplies KRDY2. The KRDY3 pulse is supplied by the Optional Tuning keyboard (when used). The outputs of U1A, U2A and U2B go to a priority network, comprised of U3B and U3C, to enable the appropriate KDATA output from the front panel. The circuit is arranged such that KRDY1 has first priority followed by KRDY2 and finally KRDY3. This assures that only one circuit is supplying KDATA at a given time. U3A provides the keyboard interrupt (KBINT) to the interrupt flip-flops on the receiver interface when one of the KRDY latches is set, indicating a pushbutton on the front panel has been depressed. The Q outputs of the KRDY latches are also supplied to the inputs of tri-state buffer U17, to be read by the microprocessor when the KDATA is read. These flip-flops are reset by a PLS7* from the Microprocessor subassembly after the keyboard interrupt is completed.

KDATA, from the front panel, enters the Synthesizer Interface and is applied to the inputs of tri-state buffers U17 and U16. When enabled by hexadecimal address 1010 (Read) U17 and U16 places the KDATA, representing the status of the pushbuttons, onto the data bus to be read by the microprocessor. When the microprocessor reads address 1020, a low on pin 1 of U16 enables its outputs at pins 3, 5, 7 and 9 providing data from KRDY2, STAT7, STAT0 and DIAL Direction to the data bus. The KRDY2 input indicates that one of the momentary contact pushbuttons in bank 2 on the front panel is being held in. STAT7 indicates if the receiver COR circuit is active and STAT0 indicates if the analog-to-digital converter on the Receiver Interface is ready to supply data. The dial direction input to U16 (DIAL DIRT) is a high or low level from flip-flop U1B which tells the microprocessor which direction the tuning knob is turning when it is rotated.

U1B compares the phase between the TUNE 1 and TUNE 2 signals supplied by the encoder assembly (U5), mounted on the front panel of the receiver, and provides a high or low level to the data bus indicating the direction of the tuning knob rotation. When the tuning knob is rotated in one direction, the TUNE 2 signal will lead the TUNE 1 signal causing the Q output of U1B to be high. When the dial rotation is reversed, the TUNE 1 signal will lead the TUNE 2 signal causing the Q output to be low. Refer to the timing diagram in **Figure 3-2** for the input phase versus output of U1B. The TUNE 1 input is applied to U1B via U14A and U14B is also supplied to the Receiver Interface as TUNE 3 to generate the Dial Interrupt when the tuning knob is rotated.

Courtesy of http://BlackRadios.terryo.org

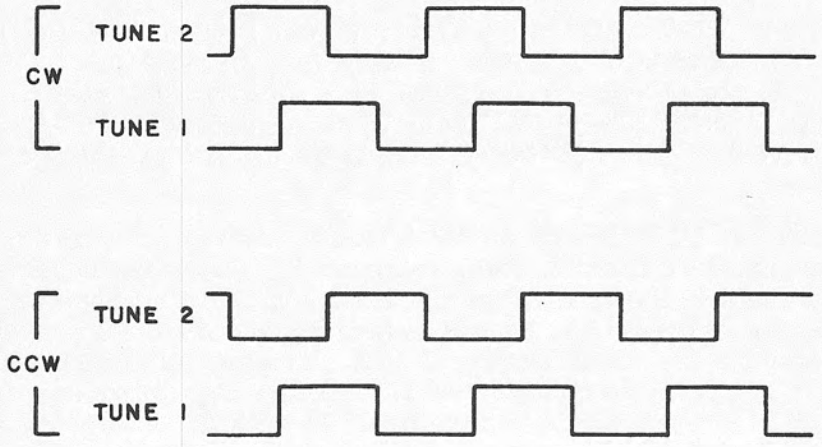

Figure 3-2. Encoder Assembly Timing Diagram

NOTE

Microprocessor software is specially configured for each receiver. EPROM serial numbers and the receiver serial number must be the same to prevent unpredictable operation.

Courtesy of http://BlackRadios.terryo.org

U8 through U11, U21 and U22 are octal latches which latch data from the data bus when their respective addresses are written into. This data is supplied to the Synthesizer Section to control the frequency of the synthesizers. U21 and U22 provide an interface between the microprocessor and the synthesizer to determine the frequency of the Variable BFO, when this option is installed. U8 through U11 interface with the synthesizers to control the tuned frequency of the LO synthesizers. In addition to controlling the synthesizer frequency, the outputs of U10 and U11 are applied to the inputs of U12. This output represents the 4 most significant digits of the frequency.

U12 is a field programmable logic array which is programmed to properly select the synthesizer band and the bands of the receiver. These outputs go to the RF/IF Motherboard to control the UHF VCO and to select the appropriate RF preselectors. In addition, the F2 output of U12 is supplied the sweep reversal circuit consisting of R14 through R16, Q1 and CR1, via inverter U13C. The sweep reversal circuit reverses the sweep of the signal monitor when the UHF band is selected. When UHF is selected, Q1 is saturated causing CR1 to be reverse biased. This removes the -15 Vdc that is supplied to the signal monitor causing the sweep on the CRT to be reversed.

Tri-state buffer U4 supplies data onto the data bus from ANTENNA SELECT switch S1 when hexadecimal address 1060 is read. The settings of S1 tell the microprocessor at what frequency to switch between antenna 1 and antenna 2.

Octal latch U15 latches data from the data bus to light the LEDs on the front panel pushbuttons. The outputs of U15 are buffered by U14 (sections C through F) and U13 (sections A, B, E and F) and supplied to the Front Panel Display and control (A6). The LDATA output indicates whether the addressed LED should be on or off, LADDR0 through LADDR2 is the address of the LED in each of four LED banks and LCLK0 through LCLK3 are used to clock each of the four LED banks.

U7, U20 and U18A form a digital-to-analog-converter circuit which generates the RF and IF gain for the receiver circuits. Data, representing gain, is latched into U7 when address 1140 is written. This supplies the data to the digital-to-analog-converter (U20) where the data is converted into an analog voltage. R1, R2 and decoupling capacitor C1 provide bias for U20 to control the scale factor for the output current of U20. R4 provides compensation current to U20 to reduce drift due to temperature changes and C3 provides high frequency compensation. The output current of U20 is converted to a voltage by U18A with R3 controlling the output voltage range.

The circuitry comprised of U6, U19 and U18B function the same as the gain digital-to-analog converter except that it supplies COR level information to the receiver.

3.2.2.4 Type 794190-3 Front Panel Display and Control (A6)

The reference designation for this subassembly is A6. Refer to **Figure 6-29** for the Type 794190-3 Front Panel Display and Control schematic diagram.

The control section of the Front Panel Display and Control Subassembly consists of pushbutton switches S1 through S35. These pushbuttons are divided into two banks and supply KDATA to the microprocessor via the Keyboard Interface ICs, U6 and U9. The first bank of switches (S1 through S20) connect to Keyboard Interface U6. Each of the normally open pushbutton switches connect between the X and Y pins of U6, with no two switches connecting between the same pins. Pins X1 through X4 are pulsed in sequence by U6 while the Y inputs are examined for the presence of the pulses. When a pushbutton is depressed, the switch provides a path for the pulse from the X output, connected to the switch, to its corresponding Y input. This

Courtesy of http://BlackRadios.terryo.org

indicates to U6 which pushbutton is depressed. The speed at which the X pins are pulsed is determined by C1. C2 provides debounce, which is the time that U6 waits to determine if the switch is actually pushed before providing an output. Once a switch has been pushed the data corresponding to the address of that switch is latched into U6 and the available output (AV) is pulsed. The available output provides the KRDY1 input to the Synthesizer Interface, which in turn provides the KENB1* signal to enable the DA through DE outputs of U6. These outputs are then provided as KDATA to be read by the microprocessor. The second bank of switches (S21 through S35) function identically to the first bank and interface with the microprocessor via, U9.

U4, U5, U7 and U8 are addressable latches used to light the LEDs on the pushbuttons, indicating the keyboard status stored in the microprocessor memory. The inputs to these latches consist of LADDR0 through LADDR2, which selects the LED to be lit by each latch, LDATA which determines whether the addressed LED is to be on or off and LCLK0 through LCLK4 which enable the outputs of each latch to light or extinguish the LED. The addressable latches pull the cathode of the selected LED low causing the LED to light for the duration of the positive LVLTG pulse applied to the anode. The LVLTG pulse duration determines the LED intensity in accordance with its pulse width. This pulse is supplied by the Receiver Interface (A5A1) via voltage dropping circuit comprised of Q10, R19 and R20. In addition to supplying the pushbutton LEDs, the LVLTG pulse is applied to the anode of DS19. DS19 provides the decimal point for the digital display. The cathode of this LED receives its ground via a current limiting resistor (A5A1R4) located on the Receiver Interface.

The remainder of the display section consists of 18 seven-segment displays (DS1 through DS18) and their control circuitry. These displays are divided into two banks of nine each. The first bank receives data from driver U1. The outputs of U1 are connected to the cathodes of each display segment via current limiting resistors R2 through R8 and provide a low output to the segment to be lit. The second Display bank is driven by U2 via current limiting resistors R9 through R15. The inputs to U1 and U2 are data representing the LED segments to be lit. This data is supplied from the Receiver Interface board.

Multiplexing permits the displays in each bank to share a common driver. The drivers are connected to the segments of each display in the bank simultaneously and each display is enabled only when data pertaining to it is present. Enabling of the displays is accomplished using transistor switches Q1 through Q9 and the DENB1* through DENB9* pulses from the Receiver Interface. The collector of each transistor connects to one display in each bank and the emitter connects to +9 V. A DENB* pulse pulls the transistor base low, causing the transistor to conduct and enabling the two displays connected to its collector. Each display pair is enabled for a short duration of time, at the end of which another pair is switched on. However due to the high rate of speed that the multiplexing occurs, each digit appears to be continuously lit. The intensity of the display is determined by the width of the DENB* pulse, which controls the time each display pair is on. A timing circuit on the Receiver Interface controls the pulse width to make the display appear brighter or dimmer.

Integrated circuit U3A functions as an audio amplifier used to drive headphones connected to the phone jack on the front panel. The gain is fixed by the values of R21 and R22. The audio input is taken from the wiper of the audio level potentiometer on the front panel which provides gain adjustment by adjusting the input signal level.

The Dwell potentiometer R1 sets the duration of time that the receiver stops at each frequency during the Scan and Step modes of operation. The wiper of R1 connects to a digital-to-analog converter on the Receiver Interface, where a digital signal representing the setting of the potentiometer is created and read by the microprocessor.

Courtesy of http://BlackRadios.terryo.org

Courtesy of http://BlackRadios.terryo.org

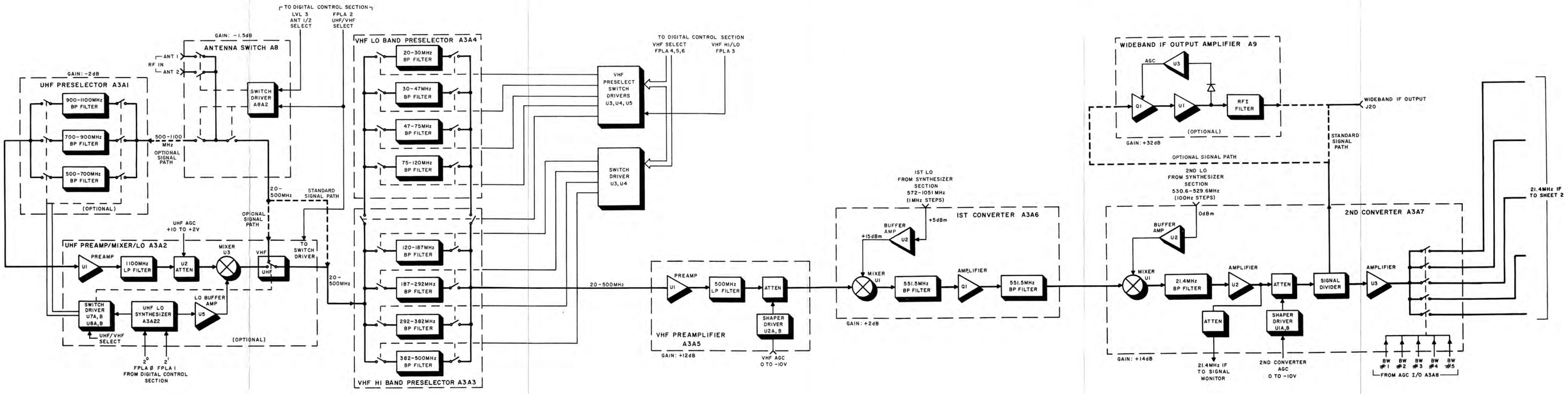

Figure 3-3. RF/IF Section, (Sheet 1 of 2) Functional Block Diagram

Courtesy of http://BlackRadios.terryo.org

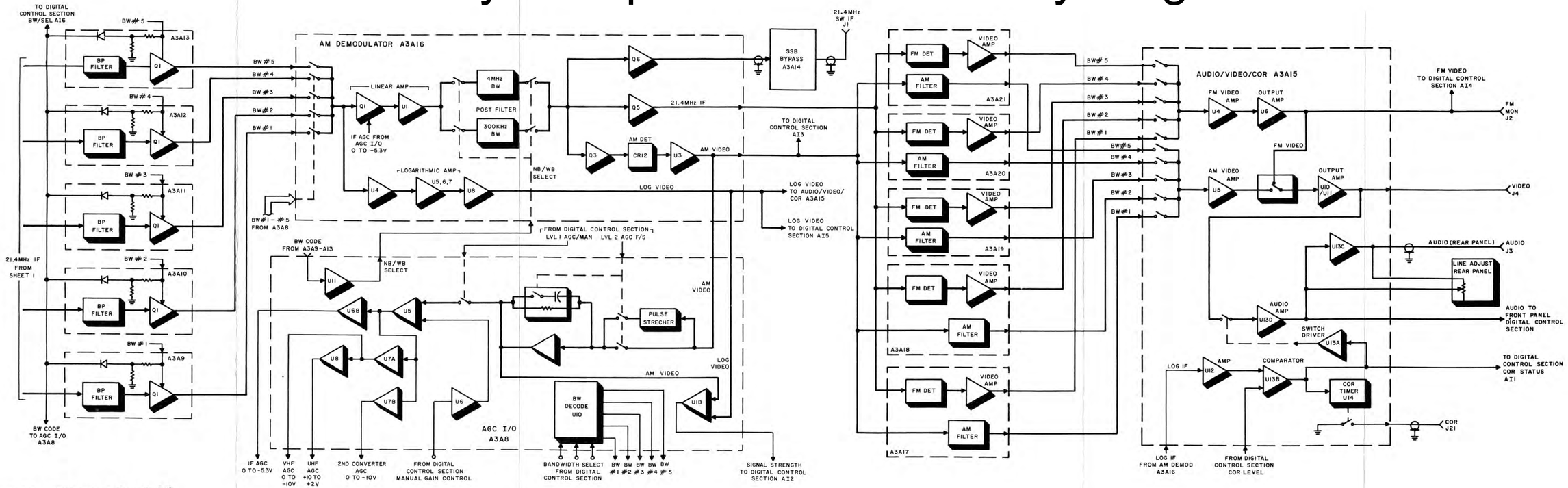

Figure 3-3. RF/IF Section, (Sheet 2 of 2) Functional Block Diagram

Courtesy of http://BlackRadios.terryo.org

3.3 RF/IF SECTION

3.3.1 FUNCTIONAL DESCRIPTION

Refer to the RF/IF Section Functional Block Diagram (**Figure 3-3**) for the following functional description. The incoming RF signal enters the receiver via the ANT 1 or ANT 2 antenna input and enters the Antenna Switch (A8). This subassembly accepts the RF signal from the selected input and directs the signal to the VHF High Band Preselector (A3A3) on the RF/IF Motherboard. Selection of the RF input is controlled by the LVL3 signal provided by the Digital Control Section, in accordance with the antenna select pushbutton on the receiver front panel. A second output from the Antenna Switch is available for use when the 500-1100 MHz Frequency Extender is incorporated in the receiver. With this option installed in the receiver, the Antenna Switch directs frequencies above 500 MHz through the frequency extender prior to being sent to the VHF High Band Preselector. The Antenna Switch output is controlled by the FPLA2 signal from the Digital Control Section, which switches the output in accordance with the tuned frequency of the receiver.

The VHF High Band Preselector (A3A3) provides preselection for signals between 120 and 500 MHz and directs signals within the 20 to 120 MHz range to the VHF Low Band Preselector (A3A4). Together, these subassemblies divide the 20 to 500 MHz frequency range into eight frequency bands. The High Band Preselector divides the 120 to 500 MHz frequency range into four bands of 120 to 187 MHz, 187 to 292 MHz, 292 to 382 MHz and 382 to 500 MHz. The Low Band Preselector divides the 20 to 120 MHz frequency range into four bands of 20 to 30 MHz, 30 to 47 MHz, 47 to 75 MHz and 75 to 120 MHz. Switching between frequency bands is controlled by the VHF HI/LO and VHF Select signals (FPLA3 through FPLA6) supplied by the Digital Control Section.

After preselection, the RF signal enters the VHF Preamplifier (A3A5) where it is amplified to a level sufficient to drive the 1st Converter (A3A6). An attenuator at the output of the VHF Preamplifier limits the output level under strong signal conditions to prevent overdriving of the mixer in the next stage. Under strong signal conditions, the VHF AGC voltage from the AGC I/O subassembly (A3A8) provides bias for the attenuator, thereby limiting the output level.

From the VHF Preamplifier, the signal is applied to the 1st Converter where the signal is mixed with a 572 to 1051 MHz 1st LO signal from the Synthesizer Section. The LO signal varies in 1 MHz steps, thus providing a tuning resolution of 1 MHz. The output of the mixer is a band of frequencies whose center frequencies are from 552 to 551 MHz. Even megahertz signals such as 20.000 MHz and 30.000 MHz convert to 552 MHz, and fractional megahertz signals such as 20.999 and 30.999, when converted, approach an IF center frequency 551 MHz. IF amplifier Q1 amplifies the signal to restore the signal level lost in the conversion process.

The output of the 1st Converter is applied to the 2nd Converter (A3A7) mixing the 552 to 551 MHz 1st IF with the 2nd LO signal from the Synthesizer Section to provide a 21.4 MHz second IF. The 2nd LO signal varies from 530.6 to 529.6 MHz in 100 Hz steps, thus providing a 100 Hz tuning resolution. The 21.4 MHz IF signal is then amplified and made available to the 21.4 MHz IF Amplifiers (A3A9 through A3A13). Samples of the IF signal are also provided to the Signal Monitor, and to the receiver rear panel (J20). When installed, the 21.4 MHz IF output to the IF Amplifiers is switched to the appropriate 21.4 MHz IF Amplifier by a PIN diode switching network controlled by the BW #1 through BW #5 bandwidth select inputs supplied by the AGC subassembly (A3A8). This switch directs the signal to the IF Amplifier with the desired bandwidth. Each 21.4 MHz IF Amplifier contains an IF Amplifier and a bandpass filter to limit the bandwidth of the IF signal. The standard receiver can accept up to five IF bandwidths.

Courtesy of http://BlackRadios.terryo.org

The output of the selected 21.4 MHz IF Amplifier is applied to the AM Demodulator (A3A16), where the signal is amplified both linearly and logarithmically. Amplifiers Q1 and U1 provide linear amplification of the 21.4 MHz signal which is then applied through a 4 MHz bandpass filter when wideband IF amplifiers are selected or a 300 kHz bandpass filter when narrowband IF amplifiers are used. Refer to **Appendix S** for the IF Amplifier detailed circuit description, schematics and alignment procedures. The post-filter output is provided to the Switched IF connector (J1) on the rear panel which provides a sample of the band limited IF signal, to the FM Demodulators for detection of FM video and to the AM Detector for detection of AM video. Logarithmic amplifiers U5, U6 and U7 provide an output dc level that varies logarithmically with signal strength. This DC level is applied to the AGC I/O subassembly where it is summed with a sample of the AM video to provide an indication of the signal strength to the Digital Control Section. The LOG video level is also provided to the Audio/Video/COR subassembly to activate the COR and Squelch circuitry.

Both the 21.4 MHz IF and AM video signals from the AM Demodulator are applied to the FM Demodulators (A3A17 through A3A21). Refer to **Appendix S** for FM Demodulator circuit descriptions, alignment procedures and schematics. Up to five FM Demodulators can be used with bandwidths corresponding to the 21.4 MHz IF Amplifiers. Each demodulator is matched in bandwidth to one of the 21.4 MHz IF Amplifiers to provide a full scale output at the band-edge of the IF signal. The FM portion of these subassemblies consists of FM detector circuitry to demodulate the 21.4 MHz IF and provide a video signal which is amplified by the video amplifier. The AM portion consists of a lowpass filter to filter out any 21.4 MHz component present on the AM video signal. The AM and FM video outputs are then applied to the Audio/Video/COR subassembly (A3A15).

Video outputs from the FM Demodulators are applied to a switching network at the input of the Audio/Video/COR subassembly (A3A15) to permit selection of AM or FM video from the appropriate FM Demodulator. The FM video is amplified and applied to the FM MON connector (J2), on the rear panel of the receiver, and to the AM/FM select switch on the Audio/Video/COR subassembly. A sample of this signal is also provided to the Digital Control Section for monitoring. AM video signals are amplified and applied to the AM input of the AM/FM select switch. Depending on the detection mode selected, the output of the AM/FM select switch will be either AM or FM video which is amplified and applied to the SW VIDEO connector (J4) on the receiver rear panel. The video signal is also applied to the audio circuitry where the signal is amplified and applied to the AUDIO connector (J3) on the rear panel and to the front panel phone jack via the Digital Control Section. The LOG video signal, from the AM Demodulator, and the COR level, from the Digital Control Section also enter this subassembly to activate the COR and squelch circuits. These two levels are compared by U8. When the LOG video level is greater than the COR level reference, provided by the Digital Control Section, the COR and squelch circuits are activated. This activates the audio outputs and provides a 100 mA current-sink via the COR connector (J21) on the rear panel to ground, to activate external equipment.

The AGC subassembly (A3A8) provides AGC voltages to the RF and IF circuits, selects and activates the desired IF bandwidth and selects the proper post-filter, in the AM Demodulator, for the IF bandwidth selected. This subassembly receives samples of the AM and LOG video signals to produce RF and IF AGC voltages and to provide an indication of signal strength to the Digital Control Section. The AGC voltages are derived from the AM video signal. This signal is detected and applied directly to U5C when fast AGC is selected, causing the AGC circuits to quickly respond to gradual changes in signal level as in continuous AM and FM signals. With slow AGC selected, the AM video is passed through a pulse stretching network prior to application to U5C. This permits the AGC circuits to respond to short duration pulses. When

Courtesy of http://BlackRadios.terryo.org

manual gain is selected, the Digital Control Section removes the output of U5C from the AGC circuits and supplies an analog signal representative of the front panel RF/IF gain control setting.

The bandwidth select signals from the Digital Control Section enter the AGC subassembly and are decoded by U10. The outputs of U10 activate the appropriate 21.4 MHz IF Amplifier and control the switching of the various PIN diode switching networks associated with the different bandwidth signal paths. Each 21.4 MHz IF Amplifier provides a DC level representing its bandwidth, when activated, to U5D which in turn selects either the wideband or narrowband post-filter on the AM Demodulator.

3.3.2 DETAILED CIRCUIT DESCRIPTION

NOTE

Detailed circuit descriptions for the IF Amplifiers (A3A9-A3A13) and the FM Demodulators (A3A17-A3A21) are contained in **Appendix S.**

3.3.2.1 Type 794128-1 Antenna Switch (A8)

The reference designation for this module is A8. Refer to **Figure 6-31** for the Type 794128-1 Antenna Switch schematic diagram.

RF signals enter the Type 794128-1 Antenna Switch via J1 (ANT 1) and J2 (ANT 2) and are applied to the RF Switch subassembly (A8A1). Signals entering at J1 are coupled through C1 to the ANT 1 branch of the RF Switch comprised of CR1, CR5 and CR9. The ANT 2 branch of the switch, comprised of CR2, CR6 and CR10 receives its signal from J2, via C4. Selection of the desired input is controlled by the polarity of the bias voltage provided by the Switch Driver (A8A2). With ANT 1 selected, the Switch Driver provides +15 Vdc at terminal E1 and -10 Vdc at E2. The +15 Vdc at E1 provides a current source for PIN diode CR1, causing it to conduct and providing a signal path through this branch of the switch. The -10 Vdc at E2 provides a current-sink for diodes CR6 and CR10 which effectively grounds the ANT 2 input and holds series diode CR2 cutoff. With ANT 2 selected, the voltages at E1 and E2 are reversed causing signal flow through the ANT 2 branch of the switch. Decoupling of the switching lines is provided by C2, C3, R1, R2, L1, L2 and FB5 through FB8.

The outputs of the RF Switch apply the RF signal to the UHF or VHF section of the receiver. When frequencies between 20 and 500 MHz are tuned, +15 Vdc is provided to terminal E3 which forward biases CR3 to permit signal flow through the VHF output branch of the switch (CR3, CR7 and CR11). A -10 Vdc potential at E4 forward biases CR8 and turns off CR4 to block signal flow through the UHF output branch. Tuning above 500 MHz (with FE installed) causes a reverse of the voltages at E3 and E4, allowing the RF signal to pass to the UHF section of the receiver. Decoupling of the switching inputs is provided with C5, C6, R3, R5, L3, L5 and FB9 through FB12. Capacitors C12 through C14, along with L8 and L9 form a 500 MHz low-pass filter to prevent signals above 500 MHz from entering into the VHF section of the receiver. The 500 MHz high-pass filter comprised of C7 through C11, L6 and L7 block signals below 500 MHz from entering the UHF section.

Courtesy of http://BlackRadios.terryo.org

The Switch Driver (A8A2) receives the ANT 2/ANT 1 and UHF/VHF select signals from the receiver and provides a bias voltage of +15 Vdc or -10 Vdc to each switch branch of the RF Switch. The outputs are provided by four operational amplifiers (U1A, U1B, U2A and U2B) whose outputs switch between +15 Vdc and -10 Vdc according to the logic levels at the select inputs. The divider formed by R3, CR1 and CR2 provides a switching reference of approximately +1.5 Vdc to insure proper switching. R4, installed in series with the -15 Vdc input, drops the negative source voltage to -10 Vdc, limiting the negative outputs of the drivers to -10 Vdc. This reduces the current requirement needed to drive the shunt diodes in the RF switch.

When ANT 2 is selected, the ANT 2/ANT 1 select input is at a logic 1 level. This places a positive voltage at the inverting input of U1A and the non-inverting input of U1B causing the bias voltage at E1 to switch to -10 Vdc and the voltage at E2 to switch to +15 Vdc. At this time, the ANT 2 branch of the RF Switch is turned on to permit the signal to pass. When ANT 1 is selected, the ANT 2/ANT 1 select input is at logic 0. This switches the voltage at terminals E1 and E2 to +15 Vdc and -10 Vdc respectively, thereby turning on the ANT 1 branch of the RF Switch. The low-pass RC filter formed by R1 and C1 prevent high frequency noise or transients from falsely triggering the switch drivers.

The operation of the UHF/VHF portion of the switch driver is identical to the ANT 2/ANT 1 portion just described. This portion is activated by the UHF/VHF select input. When frequencies of 500 MHz or above are tuned, the UHF/VHF select input is at a logic 1 level. Below 500 MHz, this input is at a logic 0.

3.3.2.2 Type 794189-2 RF/IF Motherboard (A3)

The reference designation for this subassembly is A3. Refer to **Figure 6-1** for the Type 794189-2 RF/IF Motherboard schematic diagram.

With the exception of the Antenna Switch (A8), the Type 794189-2 RF/IF Motherboard provides plug-in slots for all of the subassemblies in the RF/IF section of the receiver. Operating voltages of +9 V, +15 V and -15 Vdc are provided via J1 and are distributed to the various subassemblies by the motherboard PC tracks. Transistor Q1, along with R4 and C42 form a voltage regulator to provide a regulated +9 Vdc. Integrated circuit U1 is a regulator which provides a regulated +5 Vdc. Connector P1 interconnects the RF/IF motherboard with the Digital Control Section to accept control inputs and to provide analog signals representing the status of the RF/IF circuits.

Integrated circuit U2 decodes the VHF Select and HB/LB VHF signal lines from the Digital Control Section to provide switching of the VHF preselectors in accordance with the tuned frequency. The decoded outputs of U2 are applied to switch drivers U3, U4 and U5 which in turn provide bias current to the PIN diode switching networks in the VHF Preselectors. The VHF Preselector Switching Sequence Table (**Table 3-1**) illustrates the preselector switching with respect to the select inputs from the Digital Control Section. A logic "1" at a preselector input activates its respective bandpass filter, while a logic "0" deactivates it.

Courtesy of http://BlackRadios.terryo.org

Table 3-1. VHF Preselector Switching Sequence Table

U2 Input				Preselector Input (Band #)								HB/LB SEL		Bandpass (MHz)
2^1	HB/LB	2^1	2^0	#8	#7	#6	#5	#4	#3	#2	#1	HB	LB	
0	0	0	0	0	0	0	0	0	0	0	1	1	0	20 - 30
0	0	0	1	0	0	0	0	0	0	1	0	1	0	30 - 47
0	0	1	0	0	0	0	0	0	1	0	0	1	0	47 - 75
0	0	1	1	0	0	0	0	1	0	0	0	1	0	75 - 120
0	1	0	0	0	0	0	1	0	0	0	0	0	1	120 - 187
0	1	0	1	0	0	1	0	0	0	0	0	0	1	187 - 292
0	1	1	0	0	1	0	0	0	0	0	0	0	1	292 - 382
0	1	1	1	1	0	0	0	0	0	0	0	0	1	382 - 500

1 = +5 Vdc 0 = -9 Vdc

3.3.2.3 Type 794094-1 VHF High Band Preselector (A3A3)

The reference designation for this subassembly is A3A3. Refer to **Figure 6-2** for the Type 794094-1 VHF High Band Preselector schematic diagram.

The VHF High Band Preselector provides preselection for RF frequencies from 120 to 500 MHz by dividing this frequency range into four bands of 120-187 MHz (Filter #5), 187-292 MHz (Filter #6), 292-382 MHz (Filter #7) and 382-500 MHz (Filter #8). The band-edge of each of the bandpass filters was selected to minimize second order two-tone intermodulation distortion which could create spurious signals within the receiver. **Figure 3-4 (a)** illustrates the effect of second order interference on a receiver. In the example shown, the receiver is tuned to 180 MHz with undesired signals present at 80 MHz and 100 MHz. The intermodulation product of the undesired signals (80 +100 MHz) falls at the tuned frequency of 180 MHz, causing interference with the tuned frequency. **Figure 3-4 (b)** illustrates the same signal condition with RF preselection employed, in this case, the undesired signals fall out of the preselector bandpass, causing a considerable reduction in the signal strength. As a result, the intermodulation product (falling at the tuned frequency) is reduced to an insignificant level.

The RF signal enters the VHF High Band Preselector at J3 and is directed through the appropriate filter via the PIN diode switching network comprised of CR1 through CR20. This switching network consists of five branches to direct the signal to one of the four bandpass filters or to the VHF Low Band Preselector (A3A4), depending on the tuned RF frequency. Each switch branch consists of two series diodes connected in the signal path and two or more shunt diodes connected from the signal path to ground. Control of switching is provided by the Digital Control Section via the switch drivers on the RF/IF Motherboard.

Courtesy of http://BlackRadios.terryo.org

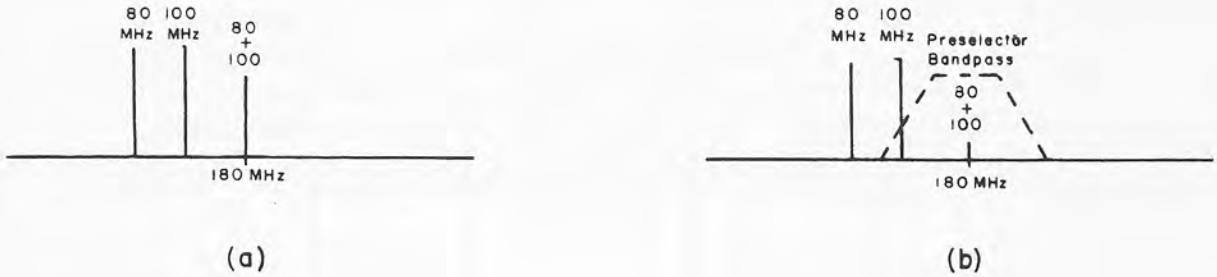

Figure 3-4. Preselector Effects on Intermodulation

When tuned to frequencies below 120 MHz, the High-Band Select input (board terminal 3) is at +15 Vdc, causing series diodes CR3 and CR4 to conduct. At this time, the RF signal is directed through CR3 and out at J4 to the Low Band Preselector (A3A4). After preselection, the signal re-enters the board at J1 and is applied through CR4 to the RF output (J2). When tuned above 120 MHz the High-Band select input is at -10 Vdc. This negative voltage cuts off CR3 and CR4 and causes shunt diodes CR1 and CR2 to conduct, thus cutting off the RF signal paths to and from the Low Band Preselector. During this time, one of the band select inputs (terminals 9, 11, 51 and 49) is at +15 Vdc, forward biasing its respective series diodes to allow the signal to pass through the appropriate filter. The remaining band select inputs are at -10 Vdc, cutting off the signal path to the other three filters.

Bandpass filter no. 5 (120-187 MHz) is a five-pole Chebishev filter comprised of L23 through L27, C45 through C54 and C56 through C65. The filter is tuned for a flat response across the 120 to 187 MHz frequency band by variable inductors L23 through L27 and variable capacitors C58 and C63. Filtering of the band select input is provided by the pi filter comprised of C74, C68 and R14C with additional filtering provided by L22, L28, C44 and C55. R12 and R13 limit current through the PIN diodes.

Bandpass filter no. 6 (187-292 MHz), another five-pole Chebishev filter, is comprised of C23 through C42 and L16 through L20 (C23, C25, C30, C31, C33, C34, C38 and C39 are not used). This filter is tuned for a flat response across the 187-292 MHz bandpass by variable inductors L16 through L20 and capacitors C36 and C41. Bandpass filter no. 7 (292-382 MHz) is a three-pole Chebishev filter comprised of C16 through C20 and inductors L11, L12 and L14. Variable capacitors C16, C18 and C20 tune this filter for a flat response across the 292-382 MHz frequency band. Filter no. 8 is a three-pole Chebishev filter comprised of L6, L7, L9, C7, C8, C10, C11 and C12. Variable capacitors C10, C11 and C12 tune this filter for a flat response across the 382-500 MHz bandpass of the filter. Filtering of the band select inputs for filters 6 through 8 is identical (with the exception of reference designations) to that of filter no. 5. Refer to the VHF High Band Preselector schematic diagram for the reference designations of these components.

Courtesy of http://BlackRadios.terryo.org

3.3.2.4 Type 794095-1 VHF Low Band Preselector (A3A4)

The reference designation for this subassembly is A3A4. Refer to **Figure 6-3** for the Type 794095-1 VHF Low Band Preselector schematic diagram.

The Type 794095-1 VHF Low Band Preselector provides RF preselection for the frequencies ranging from 20 to 120 MHz. This frequency range is divided into four bands of 20 to 30 MHz (band 1), 30 to 47 MHz (band 2), 47 to 75 MHz (band 3) and 75 to 120 MHz (band 4). The bandpass of each filter is selected to minimize the effects of second order two-tone intermodulation distortion. Refer to the Type 794094-1 VHF High Band Preselector circuit description (**paragraph 3.3.2.3**) for a more detailed description of the effects of preselection on second order two-tone intermodulation.

RF frequencies ranging from 20 through 120 MHz enter the VHF Low Band Preselector at J2 and are coupled via C4 to the four branch PIN diode switching network (CR1 through CR16). The switching network directs the RF signal through the appropriate bandpass filter to the output (J4) in accordance with the polarity of the band select voltage at board terminals 9, 11, 49 and 51, and the Low Band select voltage at terminal 3. When the receiver is tuning within the 20 to 120 MHz frequency range, the Low Band select line (terminal 3) is at +15 Vdc. This places the cathodes of the series diodes at a +7 Vdc reference due to the voltage dividers formed by R1 and R3, and R2 and R4. With a tuned frequency in the 20 to 30 MHz range, the band no. 1 select input is switched from -10 Vdc to +.5 Vdc, thus providing a current source through series diodes CR1 and CR3. This permits the signal to pass through filter no. 1 to the RF output (J1). The remaining band select inputs are at -10 Vdc which causes the shunt diodes in filters 2 through 4 to conduct, placing a ground potential at the anodes of there respective series diodes. This prevents RF signals from reaching filters 2, 3 and 4 by keeping the series diodes in their switch branches in a reverse biased condition. Bands 2, 3 and 4 are controlled in the same manner as band 1, just described, as the receiver is tuned within their frequency range.

Each filter in the VHF Low Band Preselector is a five-pole Chebishev filter with a flat response throughout its respective range. Typically these filters introduce a 1 dB insertion loss to in-band signals, with an additional .75 dB loss due to the switching network, for a total of 1.75 dB loss at the tuned frequency. The out-of-band attenuation is 25-30 dB at twice the low frequency cutoff and one-half the high frequency cutoff. Filter no. 1 (20-30 MHz) is comprised of inductors L5 through L9 and capacitors C6 through C25. Inductors L5 through L9 are variable to tune each filter pole, thus providing the best overall response. Capacitors C97, C93, C26 and C5, inductors L3, L4 and resistor R13A provide decoupling for the band 1 select line. Resistors R5 and R6 limit bias current through the PIN diodes. The decoupling for the band 2 through 4 select lines is identical to band 1 with the exception of the reference designations of the components. Refer to the Type 794095-1 VHF Low Band Preselector for the corresponding reference designations. Capacitors C101, C2 and C3 along with coils L1 and L2 provide decoupling for the Low Band select line.

Filter no. 3 passes a 47 to 75 MHz frequency band. This filter is comprised of variable inductors L19 through L23 and capacitors C51 through C68 (C50, C58, C63 and C69 are not used). The variable inductors provide means of tuning each filter pole for the best overall response. Variable inductors L12 through L16 and capacitors C28 through C47 comprise filter no. 2 (30-47 MHz) and variable inductors L26 through L30 along with capacitors C72 through C91 make up filter no. 4 (75-120 MHz).

Courtesy of http://BlackRadios.terryo.org

3.3.2.5 Type 794097-2 Preamplifier (A3A5)

The reference designation for this subassembly is A3A5. Refer to **Figure 6-4** for the Type 794097-2 Preamplifier schematic diagram.

The RF signal enters this subassembly at J1 and is applied to the input of Preamplifier U1. U1 is a broad-band amplifier which provides +15 dB of gain to RF frequencies between 20 and 500 MHz. The amplified output at U1 pin 4 is then applied to the input (E1) of the Part 370285 500 MHz low-pass filter. This circuit is a nine-pole, elliptic filter with an insertion loss of .5 dB at frequencies of 500 MHz and below. Attenuation rapidly increases to 80 dB for frequencies above 500 MHz. The 500 MHz low-pass filter is comprised of L1 through L9 and variable capacitors C2, C4, C6 and C8. The variable capacitors provide a means of tuning for the best response. This filter attenuates RF signals near the receiver's first IF frequency and image frequency signals. It also provides reverse isolation to reduce LO radiation.

From the 500 MHz low-pass filter, the RF signal is coupled through C5 to a PIN diode attenuating network comprised of CR1, CR2 and CR3. The RF resistance of each diode varies inversely with the DC bias current provided by the shaper driver circuit (U2A and U2B). These diodes are connected to form a pi-network which provides variable attenuation, while presenting a constant impedance to the output of the 500 MHz low-pass filter.

Under strong signal conditions, the VHF AGC voltage between 0 and -10 Vdc (supplied by the AGC Amplifier A3A8) is applied to the shaper driver comprised of U2A, U2B and their associated circuitry. The shaper provides two output voltages in response to the AGC voltage to bias the attenuator network. The output voltages are shaped to match the non-linear characteristics to the PIN diodes. When strong signals are present, the AGC voltage is at a value between 0 and -10 Vdc, with stronger signals producing a greater negative voltage. This voltage is applied to the inverting input of U2B to produce a positive voltage to the anodes of shunt diodes CR2 and CR3. CR6 modifies the gain characteristics of U2B to provide a non-linear response to the applied AGC voltage. The anode of CR6 is held at approximately -1.5 Vdc by the voltage divider formed by R23 and R28. When the voltage at the cathode of CR6 becomes more negative than the anode, it begins to conduct and shunts a portion to the AGC voltage. Thus, any further increase in AGC voltage is attenuated which causes the required non-linear output of U2B. The output is provided, through current limiting resistors R5 and R6 to the attenuator shunt diodes (CR2 and CR6) and also through R19 and R12 to the inverting input of U2A.

With a zero input to U2A (from U2B) the inverting input is held slightly negative by the voltage divider formed by R11 and R14, thus providing approximately +6 Vdc at its output. This positive voltage is applied to the anode of series PIN diode CR1 causing it to conduct and provide minimum attenuation under weak signal conditions. R13 adjusts the level of the output voltage by varying the negative voltage at the input of U2A. Diodes CR5 and CR4 modify the gain of U2A by providing two break points in its output voltage curve. With no input, the cathode of CR4 is held at approximately +3.4 Vdc by the voltage divider formed by R16 and R15. The cathode of CR5 is held at approximately +5 Vdc by the voltage divider formed by R20 and R21. Both diodes are turned off and effectively out of the circuit until their anode voltage exceeds the cathode voltage level. As the input voltage to U2A increases, the output begins to decrease by a corresponding amount until CR4 and CR5 become forward biased. CR4 becomes forward biased first, placing R16 in parallel with feedback resistor R8, reducing the gain of U2A. When CR5 becomes forward biased, R20 also shunts the feedback path, further reducing the gain of U2A. As a result, the output of U2A is shaped to follow the non-linear characteristics of CR1.

Courtesy of http://BlackRadios.terryo.org

The gain controlled output of the PIN diode attenuator is coupled to the RF output (J2) of the Preamplifier via coupling capacitor C8.

3.3.2.6 Type 796493-1 1st Converter (A3A6)

The reference designation for this subassembly is A3A6. Refer to **Figure 6-5** for the Type 796493-1 1st Converter schematic diagram.

The Type 796493-1 1st Converter accepts the RF signal from the Preamplifier at RF input A1J1 and applies this signal through a low-pass filter (formed by L1, L2 and C1) to the RF input of mixer U1. The 572 to 1051 MHz LO input from the Synthesizer Section enters the subassembly at the LO input (A1J2) and is applied to the input of buffer amplifier U2. U2 provides +12 dB of gain to increase the LO signal level to +15 dBm prior to its application to the LO input of mixer U2. Double-balanced mixer U1 combines the 20 to 500 MHz RF signal with the 572 to 1051 MHz LO signal to provide a difference frequency between 552 and 551 MHz as the receiver's 1st IF. The difference frequency is selected by the bandpass filter, comprised of L2 through L4 and C4 through C8, at the mixer output. The signal enters the filter via a tap in inductor L2 to match the mixer output impedance with the filter. This filter is a three-pole bandpass filter with an 8 MHz bandwidth centered at 551.5 MHz. Variable capacitors C4, C6 and C8 provide a means of tuning each filter pole for the best overall response and capacitors C5 and C7 provide coupling between the poles. The filter output is taken from the tap of inductor L4 and coupled via L5 to the input of IF amplifier U1.

Amplifier U1 provides high reverse isolation and a gain of +15 dB, which compensates for the -7 dB conversion loss in the mixer and the -.5 dB loss in each of the bandpass filter networks, to provide an overall subassembly gain of approximately +2 dB. Bias voltage for amplifier U1 is applied through L2 from connector pin 19. U1 is developed across L6. Inductor L1, L5, L6 and L11 provide impedance matching for the RF and IF signals.

The output of U1 is then coupled to a four-pole bandpass filter via L6. This bandpass filter, comprised of L7 through L10 and C9 through C15, has an 8 MHz bandwidth, centered at 551.5 MHz. C9, C11, C13, and C15 tune each pole for the best overall response, while C10, C12 and C14 provide coupling between the poles. The filter output is taken from tapped inductor L10 and is directed out of the subassembly via L11 to the IF Output (A1J3).

3.3.2.7 Type 716003-3 2nd Converter (A3A7)

The reference designation for this subassembly is A3A7. Refer to **Figure 6-6** for the Type 716003-3 2nd Converter schematic diagram.

The Type 716003-3 2nd Converter receives the 8 MHz wide frequency spectrum from the 1st Converter and mixes it with the 530.6000 to 529.6001 MHz 2nd LO signal from the Synthesizer Section to place the signal of interest at the 21.4 MHz IF frequency. The LO signal is provided by the Synthesizer and can be varied in 100 Hz steps, thus providing a 100 Hz tuning resolution. IF input A1P1 accepts the 552 to 551 MHz 1st IF signal and applies it to mixer U1. U1, a double-balanced mixer, combines the input signal with the 2nd LO signal to provide a difference frequency of 21.4 MHz. The LO signal enters the 2nd Converter via A1J1 and is amplified +17 dB by Q1 and Q2 prior to being applied to mixer U1.

The first circuit encountered by the LO signal is an impedance matching network, comprised of R6, R11, R13 and C2. This circuit matches the synthesizer output with the LO Amplifier to assure maximum signal transfer. The signal is then coupled through C3 to the base of common emitter amplifier Q2. Base bias for Q2 is provided by the voltage divider formed by

Courtesy of http://BlackRadios.terryo.org

R10, R9 and R6, while the emitter is biased by the conduction of the transistor through emitter resistors R7 and R8. The output is developed across L3. The signal, taken from the common point between L3 and the collector of Q2, is coupled through C1 via R5 and is applied to the base of common-emitter amplifier Q1 where it is further amplified. Base bias is developed by the voltage divider formed by R3, R4, R5 and L3 and emitter bias is developed by the conduction of Q1 through R1. The output, developed across L1 and L2, is taken from the top of L1 and applied to mixer U1 at a level of +17 dBm.

The output of U1 is tuned to the 21.4 MHz difference frequency by the band-pass filter comprised of L6 through L8 and C8 through C12. This three-pole filter has a center frequency of 21.4 MHz and a 1 dB bandpass of 6 MHz. The output of the 21.4 MHz band-pass filter is applied to pin 1 of U2 where it is amplified to restore the signal level lost in the conversion process. At pin 9 of U2, the amplified 21.4 MHz IF signal is then applied to a variable attenuator network, comprised of CR1, CR2 and CR3. In addition, a sample of this IF spectrum is taken from the pad formed by R21 and R22 and is provided to connector pin 43, for use when the Signal Monitor option is installed in the receiver.

The PIN diode attenuator provides a variable attenuation between 0 and 40 dB by varying the DC bias current to the diodes. A DC voltage between 0 and -10 Vdc, representative of the signal strength, is provided at connector pin 5 from the AGC Amplifier subassembly (A3A8). This bias voltage is converted to bias current for the attenuator by the shaper/driver network comprised of integrated circuit U1 and its associated components. The shaper/driver and the PIN diode network function identically to the network used in the Type 794097-2 Preamplifier described in **paragraph 3.3.2.5.**

From the attenuator network, the IF signal is applied to power divider U4 to pin 2 of amplifier U3. The IF signal is also applied via C24 and C21 to connector pin 13, where it is applied to the receiver rear panel or to the optional Wideband IF Amplifier (A9), if this option is installed in the receiver. Integrated Circuit U3 provides final amplification of the 21.4 MHz IF signal prior to applying the signal to the 21.4 MHz IF Amplifiers (A3A9-A3A13). The output of U3 is coupled via L3 and C10 to a PIN diode switching network to apply the IF signal to the selected IF Amplifier subassembly. L3, C10, and C30 provide a 50 ohm output impedance circuit. Refer to **Appendix S** for the IF Amplifier circuit description.

The output switching network comprised of CR4 through CR13 applies the 21.4 MHz IF signal to one of five possible IF Amplifiers. This switching network consists of five identical branches containing a series diode, a shunt diode and biasing components. Control over the switching of the output is accomplished by the IF bandwidth select inputs which are provided by the AGC Amplifier subassembly. The switch branch that controls the input to the subassembly installed in the IF bandwidth #1 slot consists of CR10, CR11 and resistors R33 and R34. When a bandwidth other than #1 is selected, pin 1 of the connector is effectively an open circuit. At this time the -15 Vdc supply forward biases CR11 and cuts off CR10, preventing signal flow through this branch. When IF bandwidth #1 is selected, +15 Vdc is applied to the IF bandwidth #1 select input (pin 1). This positive voltage causes shunt diode CR11 to be cut off and saturates CR10 due to the current flow through R34, CR10, R37 and L5. The saturated CR10 now functions as a closed switch to provide a signal path through DC blocking capacitor C14 and out pin 7 to the IF amplifier. Each of the remaining switch branches functions exactly as the band #1 branch.

Courtesy of http://BlackRadios.terryo.org

3.3.2.8 Type 784002-1 AGC Amplifier (A3A8)

The reference designation for this subassembly is A3A8. Refer to **Figure 6-7** for the Type 784002-1 AGC Amplifier schematic diagram.

AM Video, from the AM Demodulator (A3A16), enters the AGC Amplifier at connector pin 49. This video signal is applied to a pulse stretching network comprised of Q1, Q2, U5A and associated circuit components, and also to pin 13 of U2B, via CR7 and U2A. The pulse stretching network is used to detect and hold the peaks of short duration signals, such as pulse signals, to provide a usable indication of the actual signal level. Transistors Q1 and Q2 conduct for the duration of the incoming pulse to charge capacitor C3, through R7, to the peak level of the signal. The time constant of C3, R7 and R5 provides a slow discharge for C3, thus holding the peak level. The level, stored in C3, is buffered by unity gain amplifier U5A and is provided at pin 10 of U2B for use when the Pulse detection mode is selected.

During the AM or FM modes, the AM Video is applied through U2A and U2B to averaging circuit U5C. This averaging circuit functions as a unity gain integrater with a time constant set by C8 and R16. The output of U5C is the averaged video level which is supplied via CR2 to U6B to develop the appropriate AGC voltages, and to the summing circuit (U6C) where the level is summed with the LOG Video level to produce the front panel signal strength reading.

When the SSB option is installed in the receiver, the SSB Demodulator provides an output which enters at connector pin 17. This signal is applied to the peak detection circuit comprised of Q10, U5B and their associated components. The SSB signal causes Q10 to conduct for the duration of the time that the transmitted signal is modulated, charging C5 through R76. The time constant of C5 and R68 provides a slow discharge path for C5, thus averaging the SSB input and providing the averaged level at pin 5 of U2A, via unity gain amplifier U5B. VR1, in the emitter of Q10 prevents the emitter from reaching a level greater than 5.6 Vdc.

When Pulse detection is selected, a logic 1 is provided at connector pin 56 (Pulse/AGC select) and at pin 55 (SSB/Pulse Select). This disables the AM video path through U2B and selects the output of the pulse stretching network by providing a signal path between pins 10 and 11 of U2B. The path between pins 8 and 9 of U4B is opened, making U5C function as a unity gain amplifier. In the SSB mode, a logic 1 is again provided at connector pin 55, and pin 54 is also placed at logic 1. (The Pulse/AGC select input is returned to 0.) The logic 1 level at the SSB select input causes U2A to switch. The AM video path is turned off and the output of U5B is provided to U5C via pins 5 and 4 of U2A. U5C functions as a unity gain amplifier, due to the open switch between pins 8 and 9 of U4B.

The summing network, consisting of U6C and its associated components, sums the averaged AM video output from U5C and the LOG input from the AM Demodulator to produce an output that is a DC level, representative of the signal strength of the received signal. This level is then used by the Digital Control Section to produce the signal strength reading on the front panel of the receiver. From the receiver's minimum sensitivity, to 40 dB above sensitivity, the LOG video input (at pin 51) increases logarithmically from approximately .4 Vdc to its maximum of approximately +5.40 Vdc. This positive going voltage is applied to the signal strength output, connector pin 60. The positive voltage is also applied to the cathode of CR8, keeping the diode turned off. Once the log video voltage reaches +5.40 Vdc the voltage at the cathode no longer increases with further increases in signal level. Further increases in received signal level cause the output of U6C to forward bias CR8, causing the signal strength output to continue to increase, following increases in the AM video level. Potentiometer R72 provides a minimum level reference and R9 controls the affects to the LOG video voltage on the signal strength output. In

Courtesy of http://BlackRadios.terryo.org

the circuitry of U6C, R70 adjusts the offset at the output of U6C to set the point at which its output begins to affect the signal strength output. R12, installed in the feedback path of the operational amplifier, sets the gain of U6C.

Control of the RF and IF gain of the receiver is provided by the AGC Amplifier circuitry comprised of operational amplifiers U6A, U6B, U6D and U7 (A through D). Integrated circuit U6B provides gain control voltage to AGC drivers U7D, U7C, U7A, U6A and U7B by amplifying the voltage from U5C in the AGC mode, or U6D in the manual mode. During AGC operation, the averaged AM video input from U5C is provided to U6B through the closed switch within U3B. This negative going voltage is amplified by a factor of approximately 3, due to the values of R18 and R64, and applied to the non-inverting inputs of the IF AGC driver (U7D), VHF AGC driver (U7C) and the 2nd Mixer/Amp AGC driver (U7A). Increases in AM video cause the output of U7D to begin to go negative to provide an AGC voltage output at pin 53. This output begins to go negative at the minimum sensitivity level of the selected receiver bandwidth and provides 40 dB of gain control to the AM Demodulator when it reaches its maximum of approximately -6 Vdc. Transistor Q3, at the output of U7D, functions as an output limiter to prevent the IF AGC voltage from exceeding its -6 Vdc maximum. The voltage divider formed by R24 and R25 holds the base of Q3 at -5.5 Vdc. As the output of U7D increases, Q3 remains cut off until the output level is sufficiently negative to forward bias the emitter-base junction of Q3. When the output of U7D reaches approximately -6.2 Vdc, Q3 begins to conduct to prevent the output from increasing further.

Signal levels from approximately 40 dB above the minimum sensitivity of the receiver cause integrated circuit U7C to begin to take control over the gain of the receiver. The voltage divider formed by R26 and R19 prevents the output of U7C from going negative until the IF AGC driver (U7D) is approaching the end of its control. At 40 dB above the receiver sensitivity level, the voltage level at the non-inverting input of U7C becomes sufficiently negative to overcome the reference set by R19 and R26. At this time, further increases in signal level cause the output of U7C to swing in the negative direction to provide AGC voltage to the VHF Preamplifier or to the UHF Preamplifier/Mixer, when the receiver is tuned above 500 MHz. U7C provides an output between 0 and -10 Vdc to provide 20 dB of gain control. The output limiter, comprised of Q4, R30 and R31, prevents the output of U7C from exceeding -10 Vdc. When the UHF Frequency Extender option is installed in the receiver and when the receiver is tuned above 500 MHz the output of U7C is shaped by U6A and provided via buffer U7B to the UHF Preamplifier/Mixer. This shaper circuit inverts the AGC voltage and shapes the AGC response to match the non-linear characteristics to the UHF attenuator used. The voltage divider formed by R35 and R36 maintains a negative voltage on the anode of CR5 to keep it cut off at lower AGC levels. The gain of U6A is determined by the ratio of R32 and R34, which provides an output that increases linearly with the input from U7C. As the output U6A increases, the anode of CR5 eventually becomes forward biased and begins to conduct. This places R33 and R35 into the feedback path to reduce the gain of U6A, causing the required shaped output.

Integrated circuit U7A provides an AGC voltage between 0 and -10 Vdc to the 2nd Converter to provide 40 dB of gain control. The voltage divider formed by R44 and R45 prevents the output of U7A from changing until the VHF (or UHF) AGC driver is near the end of its range (60 dB above receiver sensitivity). Signal levels of 60 dB above sensitivity level and greater cause U7A to begin to take over control of the receiver gain. As the signal level increases, the output of U7A forward biases CR6 causing the output at connector pin 43 to begin to swing in the negative direction. This output continues to go negative with increases in signal strength until it reaches a maximum of -10 Vdc, reflecting 40 dB of gain control.

Courtesy of http://BlackRadios.terryo.org

During manual operation, the AGC drivers function exactly as in the AGC mode, except that the drivers are under the control of the RF/IF Gain control on the receiver front panel. In this mode, switch U3B is opened, removing the input from pin 5 of U6B. The manual gain control input then provides a DC voltage, via buffer U6D, to control the gain of the receiver circuits. Potentiometer R20 taps a portion of the gain control voltage and provides it via U6D to the inverting input of U6B.

The remaining circuitry of the AGC Amplifier deals with the selection of the receiver's IF bandwidth and the IF Post-Filter on the AM Demodulator subassembly. A 3-bit binary word, provided by the Digital Control Section, enters the AGC Amplifier via connector pins 2, 4 and 6. This binary input represents the selected IF bandwidth and is decoded by integrated circuit U9 to select the appropriate IF bandwidth. At the output of U9, transistors Q5 through Q9 function as switches to provide +15 Vdc to the circuitry of the selected IF bandwidth. Integrated circuit U9 is a binary-to-decimal decoder with an open-collector output. The outputs of U9 are activated, according to the input binary code, to provide a ground potential in the base circuit of the transistor switch corresponding to the desired bandwidth. This causes the transistor to conduct, providing +15 Vdc at the appropriate IF BW select output. The U9 outputs that are not selected remain in a high impedance state to hold the remaining transistor switches turned off.

Integrated circuit U5D functions as a comparator. This circuit compares the bandwidth code voltage, provided by the active IF Amplifier, with a 4.1 Vdc reference set by the voltage divider formed by R59 and R60. When the bandwidth code at connector pin 16 is less than the reference voltage, the voltage at pin 14 of U5D is switched to -15 Vdc. The negative output voltage forward biases VR2, causing R63 to drop most of the voltage to provide a near 0 voltage at connector pin 15. When the bandwidth code at connector pin 16 is greater than the reference (IF bandwidths of 250 kHz or above), the output at pin 14 of U5D is switched to +15 Vdc. This voltage is regulated by VR1 to provide a +5 Vdc output to select the wideband Post-Filter on the AM Demodulator subassembly.

3.3.2.9 Type 798074-1 SSB Bypass (A3A14)

The reference designation for this subassembly is A3A14. Refer to **Figure 6-8** for the SSB Bypass schematic diagram.

The SSB Bypass subassembly (A3A14) installs into the AM slot of the RF/IF Motherboard, when the SSB option is not installed. Resistors R2 and R1 provide a 50 ohm termination for the 31.2 MHz and 10.7 MHz signals provided to the A14 slot. Resistors R4, R5 and R3 form a 3 dB attenuating pad to reduce AM Demodulator output level and provides the interconnection to the rear panel Switched IF Output (J1).

3.3.2.10 Type 796233-1 Audio/Video/COR (A3A15)

The reference designation for this subassembly is A3A15. Refer to **Figure 6-9** for the Type 796233-1 Audio/Video/COR schematic diagram.

The detected AM and FM video signals provided by the FM Demodulators (A3A17 through A3A21) enter the Audio/Video/COR subassembly and are applied to the input switching network, comprised of U1, U2 and U3. These integrated circuits, controlled by the BW SELECT outputs of the AGC Amplifier (A3A8), provide a signal path for the AM and FM video signals from the active FM Demodulator. An SSB input is also available to U3 to permit the SSB

Courtesy of http://BlackRadios.terryo.org

Demodulator output signal to be selected when this option is incorporated in the receiver. The switching network directs the AM and FM video signals from the active FM Demodulator to the AM and FM video drivers, U5 and U4 respectively.

Integrated Circuit U4 receives the FM video signal from the active FM Demodulator and amplifies the signal to drive the output current amplifier (U6). R2 and the output circuitry of the active FM Demodulator, along with feedback resistors R3 and R4, set the gain of U4. The amplified output of U4 is then directed to current amplifier U6 via resistor R6. This integrated circuit functions as a current amplifier to provide the proper current drive at the rear panel FM monitor connector (J2). Resistor R7 sets the output impedance to 91 ohms and the low-pass filter, formed by L3, C13 and C24 filters out any high frequency noise and any residual 21.4 MHz IF component from the output. The output of U6 is also provided to the Digital Control Section via R29 and connector pin 46. This signal is used by the Digital Control Section to determine the percent of FM modulation present and to indicate when the receiver is properly tuned to the received signal. Resistor R30 forms a voltage divider with circuitry in the Digital Control Section to prevent any offset from being introduced by the Digital Control circuitry. A portion of the output of U6 is also tapped from the voltage divider formed by R43 and R36 and is provided to the FM input (pin 4) of the AM/FM select switch, U7.

The AM signal from the input switching network (U1, U2 and U3) or the SSB signal (when incorporated) is applied, via R9, to amplifier U5. The output circuitry of the active FM Demodulator and R9, along with feedback resistors R11 and R12 set the gain of U5. Resistor R8 and capacitor C32, connected between pins 2 and 8 of U5, provide feed forward frequency compensation to increase the bandwidth of the amplifier. The output of U5 is then applied to the AM input (pin 11) of the AM/FM select switch, U7.

AM/FM Select switch, U7, selects the FM video signal from U6 or the AM video (or SSB) signal from U5 and applies the signal to the video output and audio output circuitry. This switch is controlled by the logic levels provided to U7, via connector pin 45, from the Digital Control Section. With AM or SSB selected, the voltage provided to the control input of U7 is near 0 Vdc, causing U7 to switch. The signal from U5 is passed by the closed switch between pins 11 and 13 of U7. When FM is selected, the control input to U7 is placed at +5 Vdc, causing U7 to switch. The switch between pins 11 and 13 of U7 opens, blocking the signal path from U5, and the switch between pins 4 and 2 closes, providing a signal path for the FM video signal. The video signal from the AM/FM select switch is then directed to the video output circuitry via R44 and to the audio output circuitry via R49 and DC blocking capacitors C27 and C28.

Resistor R44 and the resistance of isolator U8 (or resistor R37) provide the input circuit to the video output amplifier. The voltage divider formed by these components permits the video output level to be controlled by controlling the level of the input signal provided to U10. By controlling the bias current of the LED in U8, the resistance of U8 can be increased or decreased, to set the level of the input signal. In the standard receiver configuration, a fixed bias is provided for U8 by a potentiometer (A3R12) located on the RF/IF Motherboard. When the DAV option is incorporated in the receiver, the DAV subassembly provides an operator variable bias that permits the video level to be varied. From U8, the input signal is applied to U10 where it is amplified. Video signals from U10 are applied to amplifier U15 and to video select switch S1. Switch S1 selects either negative video or positive video. Selecting the video output from U10 provides negative going video. The video output from U10 is also applied to the inverting input (pin 2) of amplifier U15. Output video from U15 is positive going video. The gain of U10 is set by R45 and the combination of R46 and R47. Integrated circuit U11 provides current amplification to drive the video output. The output of U11 is directed to the output via R14 and the low-pass filter formed by C25, C26 and L4. R14 sets the output impedance at 91 ohms and

Courtesy of http://BlackRadios.terryo.org

the low-pass filter prevents high frequency noise and any 21.4 MHz IF component from being passed out of the video output, pin 47.

Resistor R49, and capacitors C27 and C28 direct the AM or FM video signal to the audio amplifier circuitry. The signal is developed across R38 and directed to buffer U12C, via the voltage divider formed by R48 and U9. The resistance of U9 controls the overall audio amplifier gain, by controlling the level of the input signal applied to U12. Bias, provided from connector pin 50 controls the resistance of U9, thus controlling the amount of signal applied to buffer U12. In the standard receiver configuration, a fixed bias is provided to U9 by a gain potentiometer located on the RF/IF Motherboard (A3R11). However, when the DAV option is installed, a variable bias is provided to this point to permit the overall gain of the audio amplifier to be controlled.

The output of U12 is applied via R16 to U13D. U13D functions as a squelch-gated audio amplifier that is activated whenever the received signal is sufficient to activate the receiver's COR circuitry. When the programmed COR level is exceeded, U13A provides a negative voltage to the gate of Field-Effect-Transistor Q1, keeping the transistor cut off. U13D provides a voltage gain of 10 at this time, due to the ratio of resistors R16 and R18. Capacitor, C1, connected in the feedback path of U13D provides a shunt across R18 causing the gain of U13D to decrease at higher frequencies, thus limiting the high frequency response of the audio amplifier circuitry.

When the received signal is of insufficient strength to activate the COR level, the output of U13A switches to +15 Vdc. This reverse biases CR3 and removes the negative bias at the gate of Q1. With bias removed, Q1 saturates and shorts out feedback resistor R18. With R18 shorted, U13D is effectively removed from the circuit and the audio signal is attenuated to prevent an audio output.

The output of U13D is applied to the front panel audio circuitry via R19 and connector pin 53. The output is also provided to U13C, via R33, to provide audio to the rear panel audio output. Integrated circuit U13C functions as the output amplifier for the rear panel audio output. Resistor R32 and the rear panel Line Audio Adjustment (R3 on the main chassis) control the gain of U13C. The Line Audio potentiometer connects in the feedback path via connector pins 51 and 52 and permits adjustment of the gain of the output amplifier. The audio output at pin 8 of U13C is directed through R34, and the low-pass filter comprised of C2, C29 and L5 to the rear panel, via connector pin 55.

The COR circuitry is activated by the COR/NRT input provided by the Digital Control Section at board terminal 41. This input provides a logic level "1" when the received signal exceeds the programmed COR level. A logic "0" is provided when the signal is below the COR level. The COR/NRT logic level is then applied to the noninverting input of U13B. Comparator U13B compares the logic level with a fixed bias at its inverting input (pin 6) and provides a ±15 Vdc output when noninverting input (pin 5) exceeds the inverting input (pin 6). When the level at pin 5 is less than the voltage at pin 6 (COR/NRT = 0) the output of U13B is -15 Vdc.

CR4 functions as a switch to indicate the status of the COR circuit to the Digital Control Section. When the incoming signal is of sufficient strength to activate the COR circuits, the positive output of U13B forward biases CR4, causing a positive voltage to appear at the COR Status output (pin 57). Otherwise, the negative output of U13B cuts CR4 off, causing a ground potential at connector pin 57, due to the ground return via R42.

Transistor Q2 functions as the Carrier-Operated-Relay (COR) to provide a 100 mA current-sink to ground for external equipment, via the rear panel COR connector. CR2 turns Q1

Courtesy of http://BlackRadios.terryo.org

on or off, in accordance with the output of comparator U13B. When this output is positive, CR2 conducts to provide sufficient base current to saturate Q2. When the output of U13B is negative, CR2 cuts off, causing Q2 to also cut off. The time delay circuit comprised of Q3, U14 and CR1, installed in the base circuit of Q2, delays the turn off of Q2 for approximately 5 seconds when the output of U12B switches from positive to negative. When U13B switches negative, Q3 conducts to cause C5 to discharge. This creates a negative trigger pulse to U14, causing its output (pin 3) to swing positive for approximately 5 seconds. The time constant of R23 and C3 determines the time that the output remains positive. CR1 becomes forward biased for the duration of the positive output of U14, causing Q2 to continue to conduct.

3.3.2.11 Type 724016-1 AM Demodulator (A3A16)

The reference designation for this subassembly is A3A16. Refer to **Figure 6-10** for the Type 724016-1 AM Demodulator/IF Output Amplifier schematic diagram.

The incoming IF signal from the selected 21.4 MHz IF Amplifier is applied to the circuitry of the AM Demodulator/IF Output Amplifier, via the input switching network comprised of CR1 through CR4, CR13 and the associated bias resistors R1 through R5 and R88. This input switching network provides a signal path for the output of the active 21.4 MHz IF Amplifier to enter the AM Demodulator subassembly. The paths from the inactive subassemblies are turned off to prevent any interaction between the inactive output stages and the signal path. Switching of this input network is controlled by the IF bandwidth select outputs of the AGC Amplifier by the application of +15 Vdc at the BW SEL input corresponding to the selected IF bandwidth. This forward biases the series PIN diode in the signal path to cause it to function as a closed switch, permitting the incoming signal to pass. The signal entering the subassembly is then applied through capacitor C55 to the LOG IF Amplifier and through C5 to the IF Amplifier circuitry.

The signal passing through C5 is applied to gate 1 (pin 3) of dual gate FET transistor Q1. Bias for gate 1 is provided by resistors R8 and R6. Bias for gate 2 is provided by the divider formed by resistors R9, R10 and R11, connected between the +15 Vdc supply and the AGC input at connector pin 53. This bias network permits the AGC input voltage to provide 40 dB of control over the IF Output signal level. With no AGC voltage applied at pin 53, the circuit operates at maximum gain. Bias at gate 2 is set by the voltage divider formed by R9, R10 and forward biased diode CR5. When the AGC input voltage begins to go negative, due to an increase in signal strength, the negative voltage is felt at the anode of CR5, causing the diode to be cut off. With CR5 out of the circuit, the bias for Q1 is developed by the voltage divider formed by R9, R10 and R11. The output of Q1 is developed by the 21.4 MHz tank circuit formed by L1 and C9 and is coupled through C10 and C12 to the input of amplifier U1. U1, a broad band amplifier, then applies the signal through C16, C18 and R20 to the base of transistor Q2. VR1, connected to pin 2 of U1, drops a constant 8.2 V to provide U1 with a 6.8 Vdc supply. Resistor R17 functions as the output load for U1.

Bias for Q2 is developed by the voltage divider formed by R21, R20, R19 and the emitter-base junction of the transistor. Capacitor C19 and potentiometer R23 control the gain of Q2. The adjustment of R23 sets the amount of signal that is decoupled by C19, thus controlling the overall gain of this circuit. From the collector of Q2, the signal is applied to the output circuitry through C20 or through C21 to the 200 kHz Post-Filter.

The path of the 21.4 MHz IF signal is dependent on the selected IF bandwidth. When a bandwidth of 250 kHz or greater is selected, a 0 volt level is present at connector pin 41, causing U2 to switch as shown in the schematic diagram. The closed contacts of U2 pins 2 and 4, forward bias CR10 and CR11 to permit the signal to pass through C20, R29 and C35. R29 is

Courtesy of http://BlackRadios.terryo.org

installed in the signal path to create an insertion loss equal to that of the narrow band signal path. When an IF bandwidth of 100 kHz or less is selected, the AGC Amplifier (A3A8) places +5 Vdc at connector pin 41. This causes pins 2 and 4 of U2 to open and pins 11 and 13 to close. The +15 Vdc supplied by pin 11 of U2 causes diodes CR6 and CR9 to conduct, providing a signal path through the 200 kHz bandpass filter, comprised of T1, T2 and C25 through C29. The 200 kHz Post-Filter limits the bandpass to reduce broadband noise when narrowband IF bandwidths are selected.

From the Post-Filter circuitry, the 21.4 MHz is applied to three outputs via transistors Q3, Q5 and Q6. Transistor Q3 provides drive for the AM video detector. Base bias for this transistor is provided by the voltage divider formed by resistors R33 and R34. Emitter bias is achieved using the divider formed by R33, R35, R37 and the emitter-base junction of the transistor. Emitter decoupling is provided by C39 and R38. The output of Q3 is developed across the primary of T3 and is coupled to the AM detector in the secondary. Capacitor C42, in parallel with the secondary of the transformer, tunes the secondary circuit to the 21.4 MHz IF frequency. The AM detector, comprised of CR12, C44, C45 and L7, removes the 21.4 MHz component from the signal and applies the video component of the signal to the output, via buffer U3. The pi filter, comprised of C44, C45 and L7, provides the primary filtering of the detected signal to remove the 21.4 MHz component. The voltage divider formed by R39 and R40 maintains a bias current through CR12 to cause it to operate in the most linear portion of its operating range. The output of the AM detector is buffered by unity gain amplifier U3 and provided via connector pin 3 to the AGC Amplifier and via pin 5 to the FM Demodulators for final filtering of the video signal. The divider network comprised of R43, R42 and R46 provide a means of offset correction at the pin 5 output.

During the CW detection mode, the AM detector functions exactly as in the AM mode, except that a 21.4 MHz Beat Frequency Oscillator (BFO) signal is mixed with the incoming signal. The BFO signal and the IF signal zero beat to produce an audible output tone. When the CW mode is selected, the Synthesizer section provides the BFO frequency at connector pin 8. The signal is coupled to driver transistor, Q4, via C41, and provided to the primary of T3, along with the 21.4 MHz IF signal. Base bias for Q4 is provided by R83 and R84.

Transistor Q5 provides the 21.4 MHz IF signal to the FM Demodulators (A3A17 through A3A21). This emitter follower provides an impedance match with the FM Demodulators. The output signal is developed across R51 and coupled to the output via C50 and R52. Resistors R48 and R49 provide bias for the transistor.

The 21.4 MHz Switched IF Output at the receiver is provided by transistor Q6. The output of the Post-Filter is coupled via C52 to the base of the transistor. Base bias for Q6 is provided by the voltage divider formed by R54 and R55, and the gain is controlled by the decoupling circuit comprised of C53 and potentiometer R59. The output of Q5 is developed across the primary of output transformer T4 and coupled to the secondary. Transformer T4 provides DC isolation at the rear panel connector and provides a 93 ohm output impedance.

The 21.4 MHz IF signal, provided by the input switching network, is coupled through C55 to the LOG IF Amplifier, comprised of input driver U4, LOG amplifiers U5 through U7 and voltage amplifier U8. This circuit provides a DC output voltage that increases logarithmically from +.4 Vdc at noise level to +5.0 Vdc at levels 40 dB above noise. The 21.4 MHz input signal, coupled through C55, is applied to the input of U4, where it is amplified to drive the LOG IF amplifiers. The output signal is developed across R89 and potentiometer R62. The signal, taken from the wiper of R62, is coupled through C60 and is applied to the LOG IF Amplifier, comprised of U5, U6 and U7. Each of the integrated circuits forming the LOG IF Amplifier provides approximately 13 dB of gain, and they are cascaded to provide an overall range of 40 dB.

Courtesy of http://BlackRadios.terryo.org

The amplified IF signal at the output of each of these IF amplifiers is output at pin 3 of the integrated circuit and directed to the input of the next stage. The output of the final stage (U7) is developed across the output load, C67 and R76. Pin 4 of each integrated circuit provides a DC bias current which varies logarithmically with the output level of its respective amplifier. These bias outputs are summed together by the summing network comprised of R66 through R70, R78 and RT1 and then provided to U8 for voltage amplification. The summing network components, along with feedback resistors R72 and R73, set the gain of U8. From pin 6 of U8, the LOG IF Output is passed via R74 to connector pin 20 to provide the LOG video output to the required circuits.

3.4 SYNTHESIZER SECTION

3.4.1 FUNCTIONAL DESCRIPTION

The subassemblies that comprise the Synthesizer section are illustrated in the Synthesizer Section Functional Block Diagram, **Figure 3-5.** Refer to **Figure 3-5** for the following functional description.

The Reference Generator (A4A1) provides the 250 kHz, 25 kHz, 1 MHz and 10.7 MHz reference signals required by the Synthesizer section to produce the required output signals. This subassembly contains a 10 MHz oven-controlled crystal oscillator which functions as the main time base of the receiver. A series of frequency dividers then divide this frequency to produce the 250 kHz, 25 kHz and 1 MHz reference signals. The 10.7 MHz reference is produced utilizing the divided reference frequencies in conjunction with a 10.7 MHz VCO (Voltage Controlled Oscillator). Using this arrangement, all of the reference signals, including the 10.7 MHz signal, are all phase-locked to the same time base.

A connection from the Reference Generator to the rear panel of the receiver provides a 1 MHz reference to rear panel connector J8, or it accepts a 1 MHz reference from an external time base. The setting of the rear panel INT/EXT switch determines whether the receiver is using its internal time base and providing a time base to external equipment (INT), or if the receiver is accepting a 1 MHz external signal as its time base (EXT).

The 250 kHz reference signal is applied to the 1st LO Synthesizer (A4A2). This input provides the reference utilized by the 1st LO Synthesizer phase-locked-loop to produce the 572 to 1051 MHz 1st LO frequency. The 1st LO Synthesizer is comprised of a voltage controlled oscillator (VCO), a prescaler, a variable frequency divider, a phase detector and a loop filter. A sample of the VCO output frequency is applied to the prescaler, where it is divided and applied to the variable divider. At the variable divider the signal is further divided and provided to the phase detector. At the phase detector, the divided VCO frequency is compared in frequency and phase with the 250 kHz reference. A tuning voltage representing the difference between the two signals is produced by the phase detector. This tuning voltage is filtered by the loop filter and provided to the VCO to tune the VCO frequency up or down until the divided VCO signal and the reference frequency are equal. When the two signals are equal, the VCO is then locked.

Tuning of the 1st LO frequency is accomplished digitally, using three BCD tuning words provided by the Digital Control Section. These tuning words are provided as presets to a divide-by-n counter, in the variable divider, to vary the division factor of the VCO signal. The change in the division factor by the variable divider causes a difference between the divided VCO signal and the reference. This causes the phase detector to generate a tuning voltage to increase or decrease the VCO frequency until the divided frequency is again equal to the reference. When the two signals are equal, the VCO is locked on the new frequency.

Courtesy of http://BlackRadios.terryo.org

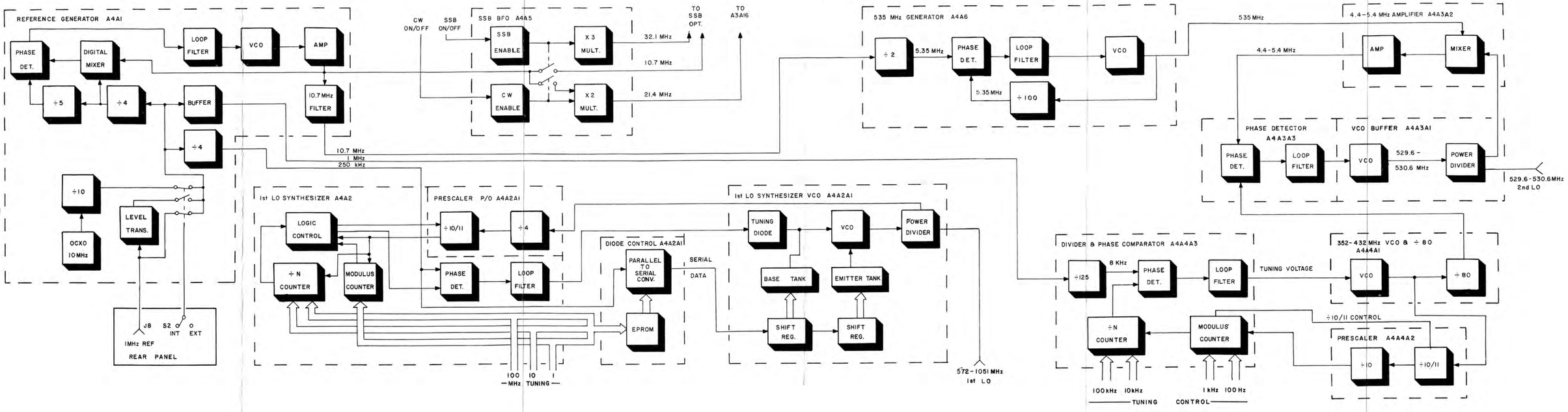

Figure 3-5. Synthesizer Section, Functional Block

Courtesy of http://BlackRadios.terryo.org

The 2nd LO Synthesizer is comprised of the 535 MHz Generator (A4A6), the 4.4-5.4 MHz Synthesizer (A4A4) and the Translation Oscillator (A4A3). Together these subassemblies produce the 529.6001 to 530.6000 MHz 2nd LO frequency that is provided to the 2nd Converter in the RF/IF Section.

The 535 MHz Generator receives the 10.7 MHz reference signal and multiplies it by a factor of 50 to obtain its final output. This subassembly utilizes a fixed frequency phase-locked-loop synthesizer to obtain a 535 MHz output that is phase locked to the receiver timebase. The 10.7 MHz reference signal from the Reference Generator is divided by a factor of 2 to provide a reference frequency of 5.35 MHz to the phase detector. The second phase detector input is a sample of the VCO output after being divided by a factor of 100. These two frequencies are compared in frequency and phase in the phase detector, and a tuning voltage is generated to maintain the VCO locked at 535 MHz. The 535 MHz signal is then applied to the Translation Oscillator (A4A3) to provide one of the two required inputs.

The second input to the Translation Oscillator is provided by the 4.4 to 5.4 MHz Synthesizer (A4A4). This incoming signal is a tunable 4.4000 to 5.3999 MHz frequency that determines the final output frequency of the 2nd LO signal. The 4.4-5.4 MHz Synthesizer is comprised of the 352-432 MHz VCO and ÷80 (A4A4A1), the Prescaler (A4A4A2) and the Divider and Phase Comparator (A4A4A3). The 352-432 MHz VCO is designed to lock onto frequencies ranging from 352.000 to 431.992 MHz. This VCO frequency is applied to a divide by 80 circuit to produce the 4.4 to 5.3999 MHz signal to the Translation Oscillator and to the Prescaler to produce the feedback signal for the phase-locked-loop. The Prescaler is a two modulus frequency divider that divides the VCO frequency by 100 or by 101 to produce 1 kHz and 100 Hz tuning resolutions. From this subassembly, the divided signal is then applied to the modulus counter and the divide-by-n counter, located in the Divider and Phase Comparator subassembly. Four BCD digits, provided by the Digital Control section preset these counters to control the overall division factor. The 1 kHz and 100 Hz digits are applied to the modulus counter which controls the number of times the Prescaler is to divide by a factor of 101. When a number other than zero is present in the modulus counter, the prescaler divides the signal by a factor of 101. Division by 101 continues until the modulus counter reaches its minimum count of zero, at which time the output of the modulus counter causes the prescaler to divide by a factor of 100. This dual division factor provides the fractional frequency division required to obtain the 100 Hz and 1 kHz tuning resolution.

From the Prescaler, the divided VCO signal is supplied to the divide-by-n counter for further division. This counter, which is preset by the 100 kHz and 10 kHz tuning words, provides the final division of the signal. Its output is then directed to the phase detector, where it is compared with an 8 kHz reference signal to create a tuning voltage to lock the VCO onto the desired frequency. The divide-by-n counter, the prescaler and the modulus counter circuits introduce a division factor from 44000 to 54000 as the least significant digits of the tuned frequency is tuned between XX.0000 and XX.9999.

The 8 kHz reference is obtained utilizing the 1 MHz reference provided by the Reference Generator (A4A1). This signal is divided by a factor of 125 to obtain the 8 kHz reference which is provided to the phase detector.

The 4.4000 to 5.3999 MHz signal, along with the fixed 535 MHz signal, is provided to the Translation Oscillator (A4A3) to produce the final 2nd LO signal. The Translation Oscillator is a translation loop synthesizer, comprised of the VCO/Buffer (A4A3A1), the 4.4-5.4 MHz Amplifier (A4A3A2) and the Phase Detector (A4A3A3). The VCO/Buffer is a voltage controlled oscillator that tunes between 529.6001 and 530.6000 MHz. This frequency is provided to the 2nd Converter in the RF/IF Section as the 2nd LO signal and also to the 4.4-5.4 MHz Amplifier to produce the Phase Detector reference frequency.

Courtesy of http://BlackRadios.terryo.org

In the 4.4-5.4 MHz Amplifier, the 529.6001 to 530.6000 MHz VCO frequency is mixed with the fixed 535 MHz frequency from the 535 MHz Generator (A4A6). The mixing of these two frequencies produces a difference frequency from 5.3999 MHz (when the VCO is tuned to 529.6001 MHz) to 4.4000 MHz (when the VCO is tuned to 530.6000 MHz). This signal is then amplified, converted to a TTL level and provided to one of the phase detector inputs.

The Phase Detector receives the signal from the 4.4-5.4 MHz Amplifier and compares it with the signal provided by the 4.4-5.4 MHz Synthesizer. These two frequencies are compared in frequency and phase, and a tuning voltage, equal to the difference between the two signals is produced. This tuning voltage then tunes the VCO up or down in frequency until the two signals are equal. When the two signals are equal, the VCO locks onto the desired 2nd LO frequency.

Tuning of the 2nd LO frequency is accomplished using the 100 kHz, 10 kHz, 1 kHz and 100 Hz BCD words provided by the Digital Control Section. These tuning words preset the counters in the Divider and Phase Comparator of the 4.4 to 5.4 MHz Synthesizer (A4A4A3) to vary the output frequency of the 4.4-5.4 MHz Synthesizer. This frequency change causes the Phase Detector in the translation oscillator to generate a tuning voltage that tunes the VCO up or down in frequency until the output of the 4.4-5.4 MHz Amplifier is again equal to the 4.4-5.4 MHz Synthesizer output. When the two frequencies are equal in frequency and phase, the VCO locks onto the new 2nd LO frequency.

The final subassembly in the Synthesizer Section is the SSB/BFO (A4A5). This subassembly receives the 10.7 MHz reference signal from the Reference Generator (A4A1) and uses this signal to produce a 21.4 MHz BFO frequency for use with the CW detection mode, or a 10.7 MHz and 32.1 MHz output, for use in the optional SSB detection mode. The activation of the output signals are controlled by the CW BFO and the SSB BFO ON/OFF signals, provided by the Digital Control Section. When the receiver is placed into the CW mode of operation, the CW BFO ON/OFF control line assumes a logic 1 level, causing the SSB/BFO subassembly to provide a 21.4 MHz output signal to the RF/IF Section. Selection of the SSB detection mode (with the SSB option installed in the receiver) causes the SSB BFO ON/OFF control line to assume a logic 1 state, causing this subassembly to provide outputs of 10.7 and 32.1 MHz.

Courtesy of http://BlackRadios.terryo.org

SECTION IV

MAINTENANCE

Courtesy of http://BlackRadios.terryo.org

Courtesy of http://BlackRadios.terryo.org

SECTION IV

MAINTENANCE

4.1 GENERAL

The WJ-8618B(S1) Receiver has been designed to operate for extended periods of time with minimum routine maintenance. Cleaning, inspection and performance tests should be performed at regular intervals, consistent with the facility's normal scheduling and after repairs have been made.

4.2 CLEANING AND LUBRICATION

The unit should be kept free of dust, moisture, grease and other foreign matter to ensure trouble-free operation. Use low pressure air, if available, to remove accumulated dust from the interior of the receiver. A clean, dry cloth or soft bristled brush may also be used for this purpose. No lubrication is required.

4.3 INSPECTION FOR DAMAGE OR WEAR

Many existing or potential troubles can be detected by making a thorough visual inspection of the unit. For this reason, as a first step, a complete visual inspection should be made whenever the unit is inoperative. Inspect mechanical parts such as pin connectors and interconnecting cables for looseness, wear and other signs of deterioration. Plug-in subassemblies and modules should be checked to assure that they are properly inserted into their appropriate connector slots and making good electrical contact. Electronic components that show signs of deterioration, such as overheating, should be inspected and a thorough investigation of the associated circuitry should be made to verify proper operation. Often, damage due to heat is a result of other, less apparent problems in the circuit.

4.4 TEST EQUIPMENT REQUIRED

The test equipment listed in **Table 4-1** or equivalents are required to perform the troubleshooting procedures, performance checks and alignment procedures that follow.

4.5 TROUBLESHOOTING PROCEDURES AND FAULT ISOLATION

Troubleshooting of the WJ-8618B(S1) receiver can be performed by placing the receiver in its normal operating condition and observing the receiver operation in the various operating modes. To eliminate external conditions as a possible cause of the malfunction, the equipment listed in **Table 4-1** should be used to inject the appropriate test signals and to monitor the results at the outputs of the receiver.

The performance tests that follow, and the Troubleshooting Table **(Table 4-2)**, are provided as an aid for localizing the cause of a malfunction to a particular subassembly within the receiver. Reference should also be made to the receiver block diagrams provided in **Section III** of the WJ-8618B(S1) Manual and to the schematic diagrams provided in **Section VI.**

Courtesy of http://BlackRadios.terryo.org

Table 4-1. Test Equipment Required

Equipment	Description	Type
Autotransformer	Variable	W5MT3W (General Radio)
Digital Voltmeter	High Impedance	Fluke 8100A
AC Voltmeter	Wideband, High Impedance	HP-3400A
RF Millivoltmeter	Calibrated in dB	Boonton 92B
	Probe	Boonton 91-12F
	"T" Adapter	Boonton 91-14A
	50Ω Termination	Boonton 91-15A
Power Meter	-25 to + 20 dBm	HP-435A
Power Sensor	30 μW to 3 W	HP-8481
Oscilloscope	DC to 35 MHz	Tektronic T935
Frequency Counter	DC to 50 MHz	HP-5245L
Transfer Oscillator	50 MHz to 18 GHz	HP-5257A
Signal Generator	20 Hz to 1024 MHz, with Audio oscillator option	HP-8640B Option 001, 002
Signal Generator	450 to 1230 MHz	HP-612A
Spectrum Analyzer	Display Section	HP-141T
	IF Section	HP-8552B
	RF Section	HP-8554B
Tracking Generator	500 kHz to 1300 MHz	HP-8444A
Synthesizer Generator	10 kHz to 1280 MHz; Sweep capabilities	HP-8662A
RF Analyzer	Display Section	Wiltron 640
Sweep Generator	1-15 MHz	Wiltron 640 G50
Log Transmission Plug-in	---	Wiltron 640 T50
IF Amplifier	20 kHz bandwidth	Type 724006-2
FM Demodulator	20 kHz bandwidth	Type 794106-2
Test Cables	Spare W17 cables (2 ea.)	WJ-370432-6
Attenuator	0-80 dB	TF-10141 (WJ-CE1)
Detector	50 ohm	HP-423A
High Voltage Probe	Input voltage: 500-1500 Vdc	Fluke 80F-5

Courtesy of http://BlackRadios.terryo.org

When troubleshooting a problem related to the Digital Control section of the receiver, it is suggested that all Digital Subassemblies not essential to the basic operation of the receiver be removed from the Digital Motherboard. The Receiver Interface (A5A1), Synthesizer Interface (A5A2) and Microprocessor (A5A3) are required and should be installed in their appropriate slots. The remaining A5 subassemblies may be removed during the trouble-shooting effort. Due to the interdependence between the Receiver Interface, Synthesizer Interface and the Microprocessor, it is recommended that a known operating spare for each of these subassemblies be kept on hand to aid in troubleshooting. These subassemblies can then be installed in place of a suspected module to quickly verify its status.

NOTE

To prevent damage to the receiver circuitry, always de-energize the receiver before any subassembly is removed or installed.

Table 4-2. WJ-8618B(S1) Troubleshooting Table

Symptom	Probable Cause	Corrective Action
Receiver totally inoperative. Front panel blank, no signal at any output connector.	Fuse F1 (F2) blown	Locate and correct cause of blown fuse. Replace blown fuse.
	Defective power switch S1	Check operation of switch S1. Replace if defective.
	Defective Power Distribution Section (A1)	Refer to **paragraph 4.6.1**
	Defective Digital Control Section (A5)	Refer to **paragraph 4.6.3**
Receiver front panel controls function but no signals at any output connector.	Defective Digital Control Section (A5)	Refer to **paragraph 4.6.3**
	Defective Synthesizer Section (A4)	Refer to **paragraph 4.6.4**
	Defective 2nd Converter (A3A7)	Refer to **paragraph 4.6.2.6**
	Defective 1st Converter (A3A6)	Refer to **paragraph 4.6.2.7**
	Defective VHF Preamplifier (A3A5)	Refer to **paragraph 4.6.2.8**

Courtesy of http://BlackRadios.terryo.org

Table 4-2. WJ-8618B(S1) Troubleshooting Table (Continued)

Symptom	Probable Cause	Corrective Action
During operation within the 20-500 MHz frequency range, the receiver malfunctions in one or more of the VHF Pre-selector bands.	Defective Digital Control Section (A5)	Refer to **paragraph 4.6.3**
	Defective VHF Pre-selector (A3A3 or A3A4)	Refer to **paragraph 4.6.2.9**
Wideband IF Output normal; all other Outputs inoperative. Malfunction occurs with all bandwidth selections.	Defective Digital Control Section (A5)	Refer to **paragraph 4.6.3**
	Defective AM Demodulator (A3A16)	Refer to **paragraph 4.6.2.4**
	Defective AGC Amplifier (A3A8)	Refer to **paragraph 4.6.2.3**
Wideband IF Output normal. All other outputs function on one or more, but not all, bandwidths.	Defective Digital Control Section (A5)	Refer to **paragraph 4.6.3**
	Defective 21.4 MHz IF Amplifier (A3A9-A3A13)	Refer to **paragraph 4.6.2.1**
	Defective FM Demodulator (A3A17-A3A21)	Refer to **paragraph 4.6.2.2**
	Defective AGC Amplifier (A3A8)	Refer to **paragraph 4.6.2.3**
Switched IF Output inoperative, all other outputs function normally.	Defective AM Demodulator (A3A16)	Refer to **paragraph 4.6.2.4**
FM Monitor Output inoperative, all bandwidths affected.	Defective Audio/Video/ COR (A3A15)	Refer to **paragraph 4.6.2.5**
FM Monitor Output inoperative in one or more, but not all, bandwidth selections.	Defective FM Demodulator (A3A17-A3A21)	Refer to **paragraph 4.6.2.2**
	Defective AM Demodulator (A3A16)	Refer to **paragraph 4.6.2.4**
No FM Video at the Switched Video Output when FM Detection is selected. FM Monitor Output normal.	Defective Digital Control Section (A5)	Refer to **paragraph 4.6.3**
	Defective Audio/Video/ COR (A3A15)	Refer to **paragraph 4.6.2.5**

Courtesy of http://BlackRadios.terryo.org

4.6 PERFORMANCE TESTS

The performance test procedures provided in this section may be used for periodic performance testing, as an aid in troubleshooting or as a performance test after repairs have been made. These procedures should be carried out only by skilled technicians, using the equipment listed in **Table 4-1** or their equivalents.

Unless otherwise specified in a particular test procedure, the receiver controls should be set to the standard test settings listed in **Table 4-3** for each of the performance tests.

Table 4-3. Receiver Standard Test Setting

Front Panel

Frequency:	255.5550 MHz
Detect Mode:	AM
Gain Mode:	AGC ON
Bandwidth:	#1
Tuning Rate:	Disabled
AFC:	AFC OFF
Audio Gain:	Midrange
RF/IF Gain:	Fully CW
Memory Select:	00
COR Level:	00
Dwell:	Fully CW
Antenna:	Antenna 1 (Antenna 2 OFF)
Operating Mode:	Manual (Local Control)

Rear Panel

REF SEL (S2)	INT
FL1S1	120 V or as applicable for local line voltage
Line Audio	Midrange

Courtesy of http://BlackRadios.terryo.org

4.6.1 POWER SUPPLY REGULATOR TEST

1. Prior to connecting power to the receiver, check the line cord receptacle and voltage selector fuse block, as described in **paragraph 2.2.1.1.**

2. Connect the receiver to the Type W5MT3W Variable Auto transformer and set the output voltage to a voltage corresponding to the selected voltage printed on the voltage selector pc wafer, described in step 1.

3. Apply power to the receiver by depressing the Power ON/OFF switch to the ON position. Note the power consumption, as indicated by the Autotransformer wattmeter. The power consumption should be no greater than 106 watts.

4. Using the Type 8100A Digital Voltmeter, measure the outputs of each of the DC supplies at the test points listed in **Table 4-4.** The measured voltages should fall within the limits specified in the table.

5. Set the Type T935 Oscilloscope to AC coupling and monitor each of the test points listed in **Table 4-4.** Vary the output voltage of the Autotransformer above and below the line voltage set in step 2 by 10% and observe that the combined ripple and noise at each test point (except A1J19) does not exceed 30mV p/p. The combined ripple and noise on the +9 V supply (A1J19) should not exceed 600 mV p/p.

Table 4-4. Power Supply Voltages

Test Point	Supply	Limits
A1J15	+15V	±.30 Vdc
A1J19	+9V	(Nominal)
A5J1-3	+5V (A)	±.25 Vdc
A4J1-3	+5V (B)	±.25 Vdc
A1J17	-15V	±.30 Vdc
A3U1 (Pin 2)	+5V (C)	±.25 Vdc
A4U1 (Pin 2)	+5V (D)	±.25 Vdc
A4U2 (Pin 2)	+5V (E)	±.25 Vdc
A4U3 (Pin 2)	+5V	±.25 Vdc

Courtesy of http://BlackRadios.terryo.org

4.6.2 RF/IF SECTION PERFORMANCE TESTS

4.6.2.1 IF Amplifier Performance Tests

1. Connect the test equipment as illustrated in **Figure 4-1.**

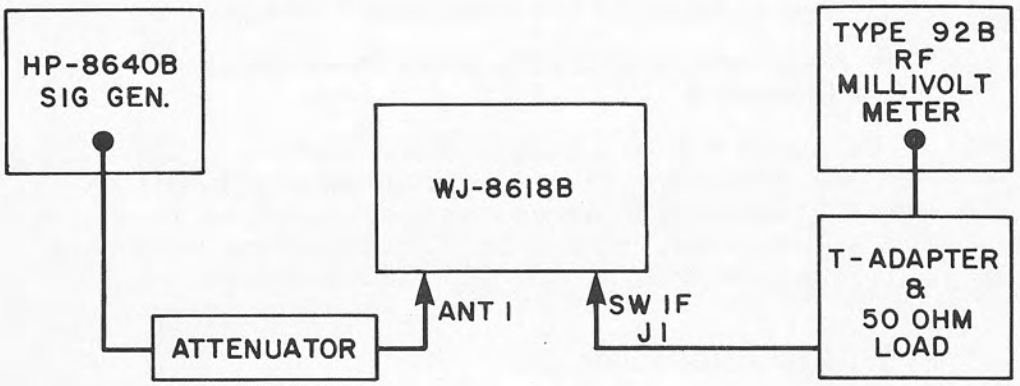

Figure 4-1. IF Amplifier Performance Test, Equipment Connections

2. Set the receiver to the standard test setting described in **Table 4-3,** except tune the receiver to 30.0000 MHz and select AGC off.

3. Adjust the Type 8640B Signal Generator for a 30.0000 MHz CW signal, with the output level set to minimum. Set the TF-10141 attenuator for a 3 dB loss.

4. Increase the signal generator output level to produce a -30 dBm indication on the Type 92B RF Millivoltmeter.

5. Set the attenuator to 0 dB and increase the signal generator frequency until the RF millivoltmeter again reads -30 dBm. Note the generator frequency.

6. Decrease the signal generator frequency, past 30.0000 MHz, until the millivoltmeter again reaches -30 dBm. Note the generator frequency.

7. Compute the 3 dB bandwidth by subtracting the frequency reading obtained in step 5 from that obtained in step 4. The computed bandwidth should equal the selected bandwidth ±10%.

Courtesy of http://BlackRadios.terryo.org

8. Set the generator frequency for 30.0000 MHz and adjust the signal generator output for -30 dBm on the millivoltmeter.

9. Tune the receiver across the IF passband while observing the level variations above and below the -30 dBm reference. The level variations should be no greater than 2.0 dBm peak-to-peak.

10. Select the #2 bandwidth and repeat steps 3 through 9.

11. Select the #3 bandwidth and repeat steps 3 through 9.

12. Select the #4 bandwidth and repeat steps 3 through 9.

13. If a 5th IF bandwidth is used, select bandwidth #5 and repeat steps 3 through 9.

14. If the results in steps 3 through 12 are incorrect for any of the selected bandwidths, place the suspected subassembly into a normally operating IF Amplifier slot and retest. If the results are still abnormal, replace the IF Amplifier and refer to the **Appendix S** for the IF Amplifier alignment procedure.

4.6.2.2 **FM Demodulator Performance Test**

1. Connect the test equipment as illustrated in **Figure 4-2.**

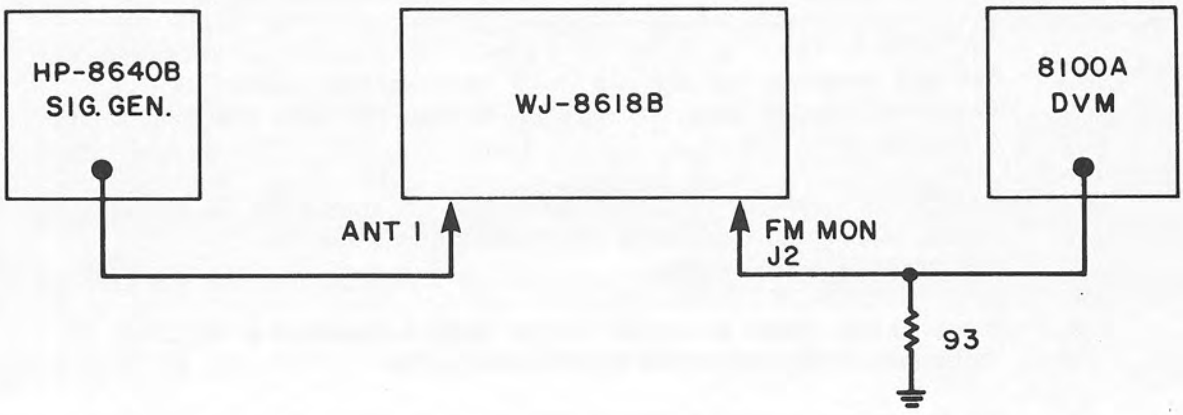

Figure 4-2. FM Demodulator Performance Test, Equipment Connections

2. Set the receiver to the standard test setting described in **Table 4-3,** except, select FM Detection and the #1 bandwidth.

3. Adjust the signal generator to produce a 255.5550 MHz CW signal at an output level of -45 dBm. Set the DVM to measure DC voltage.

Courtesy of http://BlackRadios.terryo.org

4. Observe the DC voltage offset displayed on the DVM. This voltage should be 0.00 ±.20 Vdc.

5. Increase the signal generator frequency by exactly 1/2 of the selected IF bandwidth and observe the DC voltage reading on the DVM. This voltage should read -2.00 ±.40 Vdc, ± the offset observed in step 4.

6. Return the signal generator frequency to 255.5550 MHz and then decrease the frequency by exactly 1/2 of the selected IF bandwidth. The voltage displayed on the DVM should read +2.00 ±.40 Vdc, ± the offset observed in step 4.

7. Select IF bandwidth #2 and repeat steps 3 through 6.

8. Select IF bandwidth #3 and repeat steps 3 through 6.

9. Select IF bandwidth #4 and repeat steps 3 through 6.

10. Select IF bandwidth #5 (if used) and repeat steps 3 through 6.

11. If the results obtained in steps 3 through 10 are incorrect for any of the selected IF bandwidths, place the suspected FM Demodulator into one of the normally operating FM Demodulators. (The IF Amplifier associated with the suspected bandwidth must also be exchanged). Retest the subassembly in the new location.

12. If the results are still abnormal and the IF Amplifier checks normal, per **paragraph 4.6.2.1**, replace the FM Demodulator. Refer to **Appendix S** for the FM Demodulator alignment procedure.

4.6.2.3 **AGC Amplifier Performance Tests**

1. Connect the HP 8640B signal generator to the ANT #1 input at the receiver rear panel and set the generator to produce a 450.000 MHz CW signal at a level of -90 dBm.

2. Tune the receiver to 450.000 MHz and select the AGC mode of operation. Select bandwidth #1.

3. Note that the signal strength display on the receiver front panel reads -90 dB ±4 dBm.

4. Increase the output of the signal generator to -20 dBm, in 10 dB steps, while observing the signal strength display. Observe that the displayed signal strength remains within ±8 dB of the generator output level.

5. Connect the RF millivoltmeter and a 50Ω load to the switched IF output connector on the receiver rear panel (J1).

Courtesy of http://BlackRadios.terryo.org

6. Adjust the output level of the signal generator to the minimum sensitivity level of the IF Amplifier installed in the bandwidth #1 slot as follows:

IF Bandwidth	Sensitivity Level	IF Bandwidth	Sensitivity Level
10	-104	300	-89
20	-101	500	-87
50	-97	1000	-84
75	-95	2000	-81
100	-94	4000	-78
250	-90		

7. Note the switched IF Output level on the RF millivoltmeter.

8. Increase the generator output level to -10 dBm and again note the RF millivoltmeter indication.

9. Observe that the level noted in step 8 varies no more than 6 dB from the level noted in step 7.

10. Reduce the signal generator output level to minimum and set the receiver to manual gain control (AGC off). Rotate the front panel RF/IF Gain control fully CW.

11. Adjust the signal generator output level to produce a -30 dBm indication on the RF millivoltmeter.

12. Rotate the RF/IF gain control fully CCW.

13. Increase the signal generator output level by exactly 90 dB and note the level on the RF millivoltmeter.

14. The indication on the RF millivoltmeter should be -30 ±6 dBm.

15. Repeat steps 1 through 14 for the other IF bandwidths.

16. Reset the signal generator output level to -90 dBm and rotate the RF/IF gain control fully CW.

4.6.2.3.1 **Bandwidth Selection**

1. Set the signal generator output level to minimum and select the #1 bandwidth, on the front panel of the receiver.

2. Place the receiver on its side and remove the bottom cover to gain access to the RF/IF motherboard pin connections.

Courtesy of http://BlackRadios.terryo.org

3. Set the T935 Oscilloscope for DC coupling and measure the input and output logic levels at the connector pins listed in **Table 4-5.**

Table 4-5. IF Bandwidth Switching Logic

Bandwidth	Input (A3XA8)				Output (A3XA8)				
	pin	6	4	2	9	13	11	7	5
#1		0	0	0	0	0	0	0	1
#2		0	0	1	0	0	0	1	0
#3		0	1	0	0	0	1	0	0
#4		0	1	1	0	1	0	0	0
#5		1	0	0	1	0	0	0	0

4. Select the #2 IF bandwidth and repeat step 3.

5. Select the #3 IF bandwidth and repeat step 3.

6. Select the #4 IF bandwidth and repeat step 3.

7. Select the #5 IF bandwidth (if used) and repeat steps.

NOTE

With dual IF modules installed, repeat steps 1 through 7 while monitoring the logic level at XA15 pin 58. Press each IF Bandwidth key twice. The first time, observe that the level at XA15 pin 58 is LOW. The second time observe that the logic level at XA15 pin 58 is HIGH.

4.6.2.4 AM Demodulator Performance Tests

4.6.2.4.1 IF Output

1. Remove all the 21.4 MHz IF Amplifiers installed in the bandwidth IF Amplifier slots (A9-A13).

2. Set the HP-8640B signal generator to produce a 21.4 MHz CW output level of -57 dBm. Set the receiver RF/IF gain control fully clockwise.

Courtesy of http://BlackRadios.terryo.org

3. From the underside of the receiver, connect the signal generator between pins 43 (signal) and 44 (shield) of connector XA16 and connect the RF millivoltmeter to rear panel connector J1, as illustrated in **Figure 4-3.**

4. Apply power to the receiver while holding the FUNCTION key pressed in. Select bandwidth number 1 on the receiver front panel. If the level at XA8 pin 15 is not LOW, jumper pin 16 of the AGC Amplifier connector (XA8) and ground, through a 1 k ohm resistor, to select the narrow band post filter of the AM Demodulator card.

5. Observe the switched IF output level on the RF millivoltmeter reads -30 dBm ±3 dB.

6. Slowly increase the signal generator frequency until the level displayed on the RF millivoltmeter decreases by 1 dB. Note the signal generator frequency.

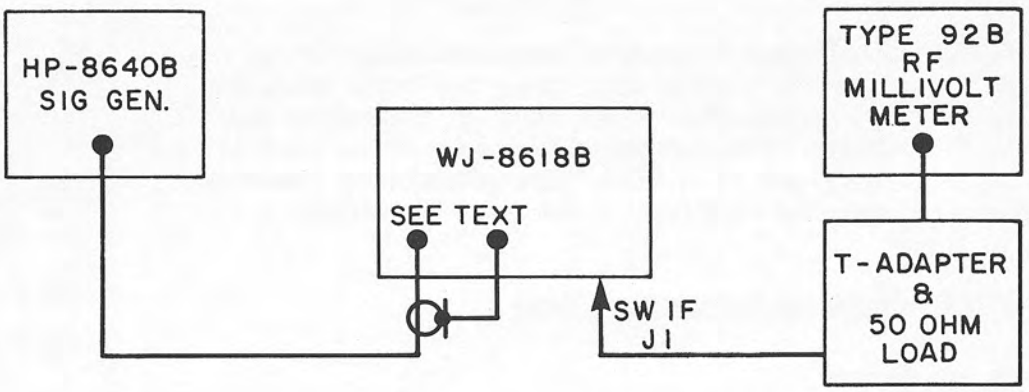

Figure 4-3. AM Demodulator Performance Test, Equipment Connections

7. Decrease the signal generator frequency, past 21.4 MHz, until the 1 dB down point is again displayed on the RF millivoltmeter. Note the signal generator output frequency.

Courtesy of http://BlackRadios.terryo.org

8. Determine the bandwidth of the IF post filter by subtracting the frequency obtained in step 6 from that obtained in step 7. This frequency should be between 200 and 400 kHz.

9. Reset the signal generator to 21.4 MHz and disconnect the RF millivoltmeter from rear panel connector J1.

10. Connect the DVM between pin 20 of XA16 and ground to observe the log video output level.

11. Decrease the signal generator output level until DVM indicates +0.4 ±.2 Vdc and note the signal generator output level (typically -76 dBm).

12. Increase the generator output level by 40 dB above the level set in step 11. Observe an indication of between 5.0 and 5.5 Vdc on the DVM.

13. After completion of the performance test, reinstall the 21.4 MHz IF Amplifiers in their respective bandwidth slots.

4.6.2.5 Audio/Video/COR Performance Tests

4.6.2.5.1 Video Output

1. Connect the test equipment as illustrated in **Figure 4-4,** and remove the FM Demodulators from their slots on the RF/IF motherboard.

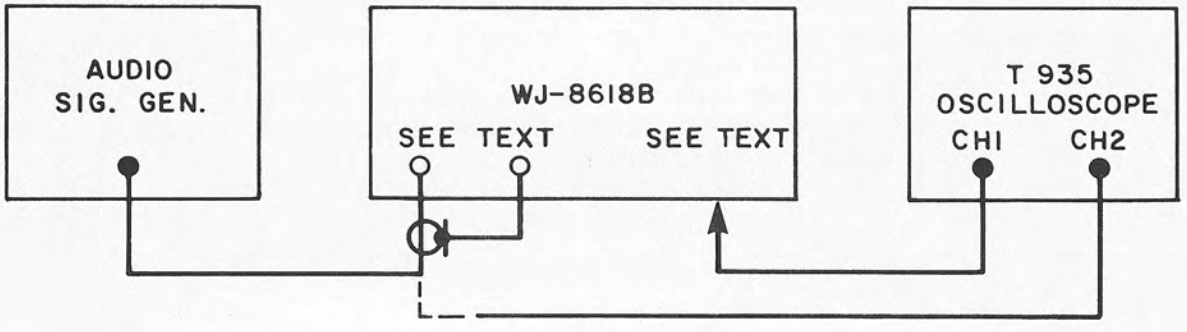

Figure 4-4. Audio/Video/COR Performance Test, Equipment Connections

Courtesy of http://BlackRadios.terryo.org

2. Set the receiver to AM Detection and select the #1 IF bandwidth.

3. Connect the Audio signal generator and the channel B input of the oscilloscope to pin 3 of connector XA15. Adjust the generator to produce a 1 kHz signal at 2 V p/p amplitude, as observed on channel B of the oscilloscope. Remove the oscilloscope probe.

4. Connect the channel A input of the oscilloscope, and 93Ω termination to J2 (FM MON) on the receiver rear panel. Observe that the signal at J2 is between 2 V p/p and 6 V p/p.

5. Move the channel A input of the oscilloscope and the 93Ω termination to J4 (switched Video) on the receiver rear panel. Observe no AM video is present.

6. Move the input signal from the signal generator to pin 1 of XA15. Observe a signal of 2 V p/p to 4 V p/p displayed on the A trace of the oscilloscope.

7. Connect the channel B input of the oscilloscope and 600Ω termination to the J3 (Audio) output on the receiver.

8. Rotate the line audio (R3) fully CW and observe the output reaches an amplitude of at least 7 V p/p with no clipping present.

9. Select the #2 IF bandwidth and repeat steps 3 through 8. Connect the signal generator to pin 5 of XA15 in step 3 and to pin 7 of XA15 in step 6.

10. Select the #3 IF bandwidth and repeat steps 3 through 8. Connect the signal generator to pin 9 of XA15 in step 3 and to pin 11 in step 6.

11. Select the #4 IF bandwidth and repeat steps 3 through 8. Connect the signal generator to pin 13 of XA15 in step 3 and to pin 15 in step 6.

12. If the 5th IF bandwidth is used, select bandwidth #5 and repeat steps 3 through 8. Connect the signal generator to pin 17 of XA15 in step 3 and to pin 19 in step 6.

Courtesy of http://BlackRadios.terryo.org

4.6.2.5.2 **COR Operation**

1. Connect the test equipment as illustrated in **Figure 4-5.**

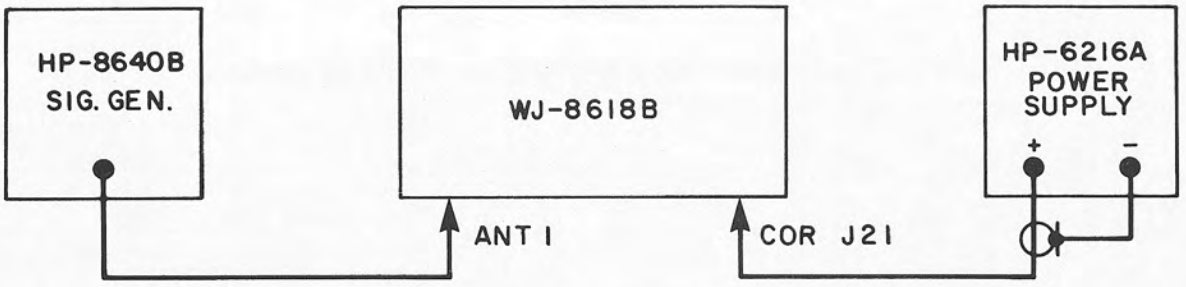

Figure 4-5. COR Circuit Test, Equipment Connections

2. Adjust the signal generator for a 255.5550 MHz CW signal, with the output level set to minimum. Set the HP-6216A power supply output for 24 V and adjust the current limit for 100 ma maximum. (CAUTION: Exceeding 100 mA can cause damage to the Audio/Video COR circuitry.)

3. Set the receiver to the standard test set-up described in **Table 4-3** and observe that the COR LED is illuminated. Observe the millimeter on the power supply reads 100 mA.

4. Depress the COR UP pushbutton and increase the COR level until the COR LED extinguishes. This level is typically 10 or less. Observe the millimeter on the power supply reads near 0 mA

5. Slowly increase the output level of the signal generator until the COR LED just illuminates. Note the generator output level.

6. Increase the COR level of the receiver to 40 and observe the COR LED is extinguished.

7. Increase the Signal Generator RF output until the COR LED just illuminates and note the generator output level.

Courtesy of http://BlackRadios.terryo.org

8. Compute the COR range by subtracting the level obtained in step 5 from the level obtained in step 7. This range should be a minimum of 24 dBm.

4.6.2.6 **2nd Converter Performance Tests**

1. Remove the IF Amplifiers installed in slots A9 through A13 of the RF/IF Motherboard.

2. Connect the test equipment as illustrated in **Figure 4-6.**

NOTE

Cable A7A1P1 goes from A3A7A1E1 to the A3A6 module.

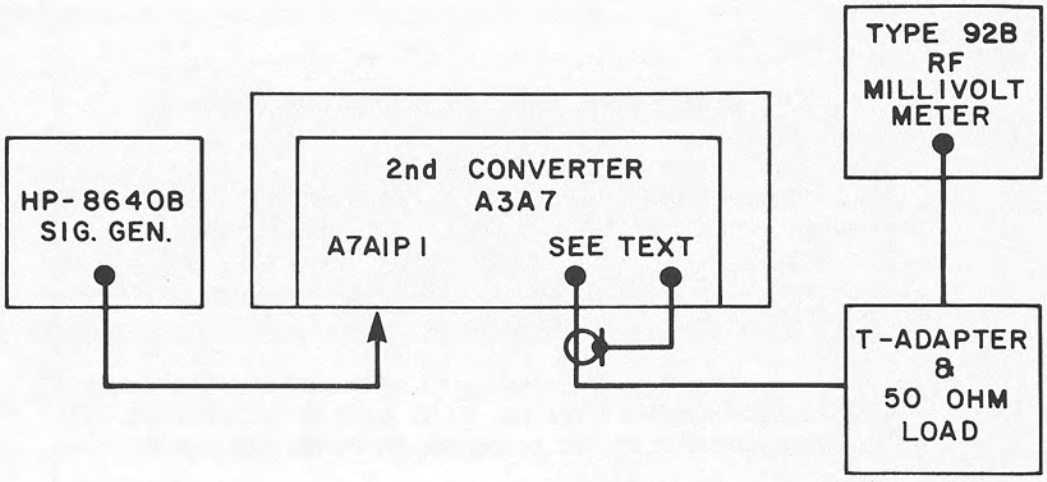

Figure 4-6. 2nd Converter Performance Test, Equipment Connections

3. Set the Receiver to 20.0000 MHz, IF bandwidth #1, AGC OFF and AFC OFF. Rotate the RF/IF gain control fully clockwise.

4. Connect the RF millivoltmeter probe between pin 7 (signal) and pin 8 (shield) of connector XA7.

Courtesy of http://BlackRadios.terryo.org

5. Set the signal generator to produce a 552 MHz CW signal at the second Converter input (A7A1P1). Adjust the output level to produce a -40 dBm indication on the RF millivoltmeter.

6. Note the output level of the signal generator and determine the 2nd Converter Gain by subtracting the signal generator output level from the level displayed on the RF millivoltmeter. The gain should be 13 ±1 dB.

7. Slowly increase the signal generator frequency until the RF millivoltmeter reading decreases by 1 dB. Note the signal generator frequency.

8. Decrease the signal generator frequency, past 552 MHz, until the RF millivoltmeter again reaches the 1 dB down point observed in step 7. Note the signal generator frequency.

9. Determine the 1 dB bandwidth of the 2nd Converter by subtracting the frequency obtained in step 7 from the frequency obtained in step 8. This frequency should be 6 MHz minimum.

10. Slowly vary the Generator frequency across the frequency range noted in steps 6 and 7 and observe the level variations above and below the -40 dBm reference. The passband response should not vary more than ±.5 dB between the adjacent level variations above and below the reference (1 dB of in-band ripple).

11. Return the signal generator to 552 MHz and verify the output level of the 2nd Converter, as indicated by the RF millivoltmeter, is -40 dBm. Readjust the signal generator output level, if necessary.

12. Remove the RF millivoltmeter from pins 7 and 8 of XA7.

13. Install the RF millivoltmeter across pin 17 (signal) and pin 18 (shield). Select the IF bandwidth #2.

14. Observe that the output displayed on the RF millivoltmeter is equal to the reference set in step 11. Remove the millivoltmeter.

15. Install the RF millivoltmeter across pin 51 (signal) and pin 52 (shield). Select the IF bandwidth #3.

16. Observe that the output displayed on the RF millivoltmeter is equal to the reference set in step 11. Remove the millivoltmeter.

17. Install the RF millivoltmeter across pin 55 (signal) and pin 56 (shield). Select the IF bandwidth #4.

Courtesy of http://BlackRadios.terryo.org

18. Observe that the output displayed on the RF millivoltmeter is equal to the reference set in step 11.

19. Install the RF millivoltmeter across pin 47 (signal) and pin 48 (shield). Select IF bandwidth #5.

20. Observe that the output level displayed on the RF millivoltmeter is equal to the reference set in step 11. Note the output level of the signal generator.

21. Connect the DVM to pin 5 of XA7 and observe the AGC voltage present. The AGC voltage present should be 0 ±.1 Vdc.

22. Rotate the RF/IF gain control, on the receiver front panel, fully CCW and observe the AGC voltage present at pin 5 of XA7. The AGC voltage should increase to -9.0 ±1.0 Vdc.

23. Increase the output level of the signal generator until -40 dBm is again indicated on the RF millivoltmeter. Note the generator output level.

24. Determine the gain control range by subtracting the signal generator output level obtained in step 23 from that obtained in step 20. This control range should be between 30 and 40 dB.

25. Remove the test equipment and reinstall IF Amplifiers into their respective locations. Reconnect A7A1P1 to A1J3 on the 1st Converter.

4.6.2.7 **1st Converter Performance Tests**

1. Connect the test equipment as illustrated in **Figure 4-7.**

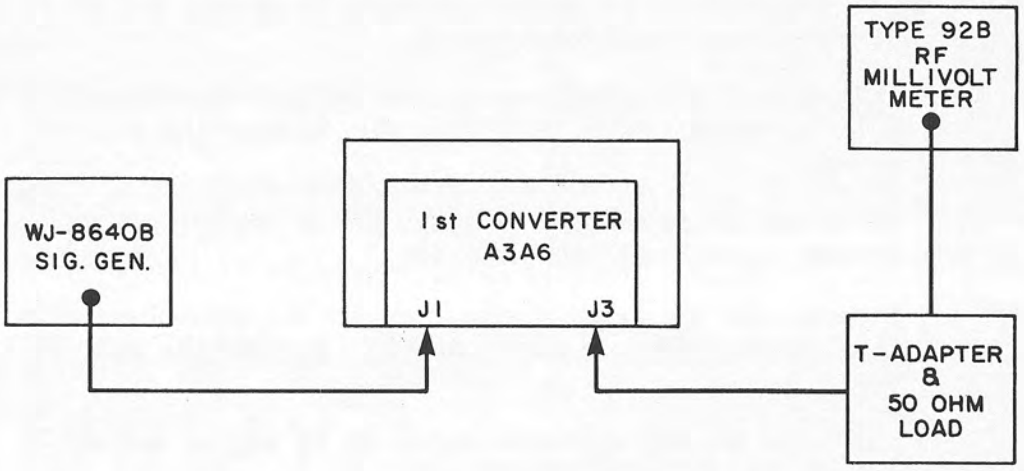

Figure 4-7. 1st Converter Performance Test, Equipment Connections

Courtesy of http://BlackRadios.terryo.org

2. Set the receiver to the standard test setting.

3. Adjust the signal generator output to produce a 255 MHz CW signal. Adjust the output level to produce a -10 dBm reading on the RF millivoltmeter.

4. Increase the output frequency of the signal generator until a 1 dB decrease is observed on the RF millivoltmeter. Note the frequency of the signal generator.

5. Decrease the output frequency of the generator, past 255 MHz, until the 1 dB down level is again observed. Note the frequency of the signal generator.

6. Determine the 1 dB bandwidth of the 1st Converter by subtracting the frequency noted in step 5 from the frequency noted in step 4. The bandwidth should be 8 MHz minimum.

7. Return the signal generator frequency to 255 MHz and verify the output of the 1st Converter is -10 dBm, as indicated by the RF millivoltmeter. If necessary, readjust the signal generator output level.

8. Disconnect the signal generator and RF millivoltmeter from the 1st Converter and connect the generator to the input of the RF millivoltmeter.

9. Observe the signal generator output level, as displayed on the RF millivoltmeter. This level should be between -11 and -14 dBm, reflecting a gain of 1 to 4 dB.

10. Reconnect P11 to J1 and A7A1W1 to J3 on the 1st Converter.

4.6.2.8 **VHF Preamplifier Performance Tests**

1. Tune the receiver to the standard test setting listed in **Table 4-3**, except, select AGC OFF. Verify that the RF/IF gain control, on the receiver front panel, is in its fully CW position.

2. Adjust the signal generator to produce a 255.0 MHz CW signal and connect the generator output to the input of the RF millivoltmeter. Adjust the signal generator level to produce a -32 dBm output level, as indicated on the RF millivoltmeter.

3. Connect the test equipment as illustrated in **Figure 4-8.**

4. Observe the level indicated on the RF millivoltmeter.

5. Determine the VHF Preamplifier gain by subtracting the level obtained in step 4 from that obtained in step 2. This gain should be a minimum of 12 dB.

Courtesy of http://BlackRadios.terryo.org

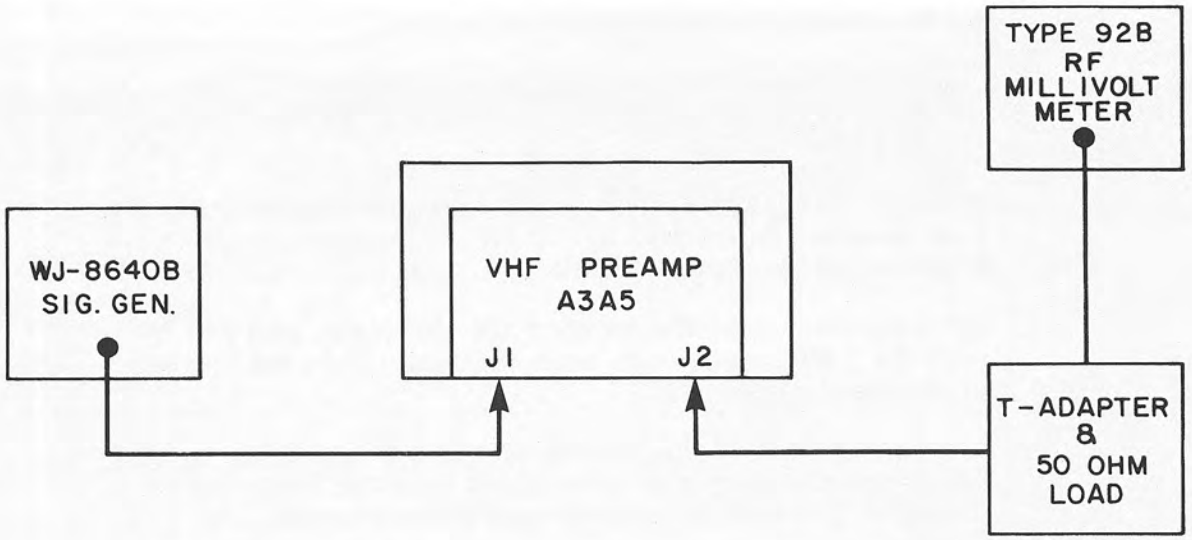

Figure 4-8. VHF Preamplifier Performance Test, Equipment Connections

6. Adjust the signal generator output to produce a -20 dBm indication on the RF millivoltmeter. Vary the signal generator frequency between 20 and 500 MHz, while observing the level indication on the millivoltmeter. This level should remain at -20 dBm ±2 dB across the frequency range.

7. Continue to increase the generator above 500 MHz and observe a rapid decrease in the level indicated on the RF millivoltmeter.

8. Return the signal generator frequency to 255.0 MHz and increase the generator output level to produce a -10 dBm indication on the RF millivoltmeter.

9. Rotate the RF/IF gain control, on the receiver front panel to its fully CCW position. Observe the output level, as indicated on the RF millivoltmeter. The output level should be 20 dB less than the level observed in step 8.

4.6.2.9 **VHF Preselector Performance Checks**

1. Connect the output of the RF signal generator to the input of the RF millivoltmeter. Tune the generator to produce a 25.200 MHz CW signal and adjust its output level for a -20 dBm indication on the RF millivoltmeter. Do not change the generator output level as this level will be used as a reference to determine the insertion loss of the preselector.

Courtesy of http://BlackRadios.terryo.org

2. Connect the test equipment as indicated in **Figure 4-9.** Tune the receiver to 22.0000 MHz.

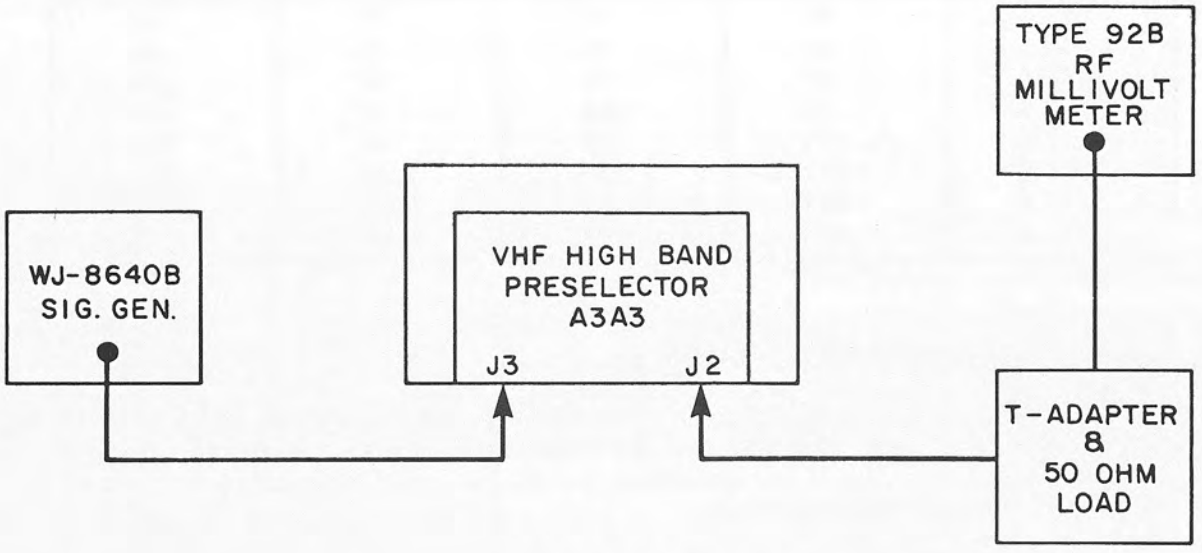

Figure 4-9. VHF Preselector Performance Test, Equipment Connections

3. Observe the VHF preselector output level, as indicated on the RF millivoltmeter. This level should be no less than -22 dBm when the RF/IF gain control is fully CW.

4. Slowly tune the signal generator through the passband of the preselector, as listed in **Table 4-6.** The level indicated on the RF millivoltmeter should remain within ±1 dB of the level observed in step 3.

5. Repeat steps 1 through 4 for the remaining preselector bands, using the frequencies listed in **Table 4-6.** In each case, recalibrate the generator output level to -20 dBm at the preselector center frequency, as described in step 1.

6. Determine the out-of-band attenuation of each preselector by tuning the receiver to the frequencies listed in the table. Tune the signal generator to upper frequency (÷2) and lower frequency (X2) as listed.

7. Observe that the RF millivoltmeter indications observed in step 6 are at least 25 dB less the level obtained in step 3.

Courtesy of http://BlackRadios.terryo.org

Table 4-6. RF Preselector Passband

Center Freq. (MHz)	Lower Freq. (MHz)	Upper Freq. (MHz)	Upper Freq. ÷2 (MHz)	Lower Freq. X2 (MHz)
25.2	20	30	15	40
38.5	30	47	23	60
61.0	47	75	37	94
97.5	75	120	60	150
153.5	120	187	93	240
239.5	187	292	146	374
337.0	292	382	191	584
441.0	382	500	250	764

4.6.2.10 **Antenna Switch Performance Test**

1. Tune the HP-8640 Signal Generator to produce a 250 MHz CW output and connect the RF millivoltmeter to the generator output. Adjust the generator output for a -20 dBm indication on the RF millivoltmeter.

2. Disconnect the RF millivoltmeter from the HP-8640 Signal Generator and connect it to the RF output of the HP-612A Signal Generator. Tune the HP-612A Generator to produce a 600 MHz CW output and adjust the level to produce a -20 dBm indication on the RF millivoltmeter.

NOTE

The Antenna Switch performance test checks the 20-500 MHz and the 500-1100 MHz portion of this subassembly. If the 500-1100 MHz Frequency Extender is not installed in the receiver, temporarily place switch number 6 of S1 on the Synthesizer Interface (A5A2) into the open position to permit tuning above 500 MHz. Be sure to restore S1 to its original positions after the Antenna Switch performance test is completed.

3. Connect the test equipment as illustrated in **Figure 4-10,** with the RF millivoltmeter connected to J3.

4. Tune the Receiver to 250 MHz and select Antenna 1. Using the DVM, measure the switching voltage at pins 3 and 1 of J2 (on the RF/IF Motherboard). The voltage at these pins should measure near 0 Vdc. Leave the DVM connected to pin 1.

Courtesy of http://BlackRadios.terryo.org

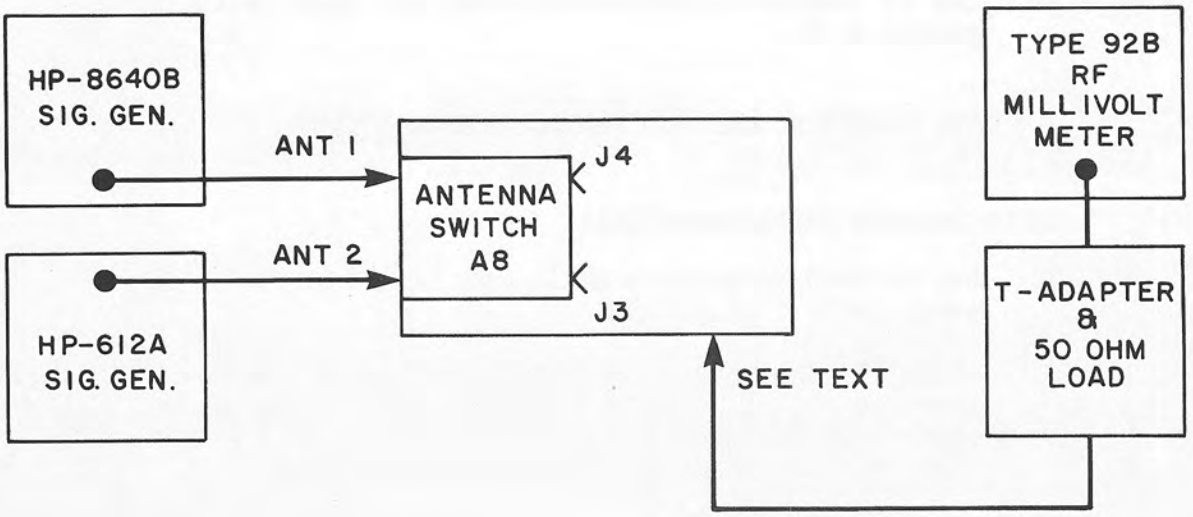

Figure 4-10. Antenna Switch Performance Test, Equipment Connections

5. Note the output level of the antenna switch as indicated by the RF millivoltmeter. This level should measure no less than -21 dBm.

6. Tune the HP-8640 Signal Generator to 500 MHz and slowly decrease the generator frequency to 20 MHz, while observing the RF millivoltmeter. The level should vary no more than ±.5 dB from the level observed in step 5.

7. Slowly tune the Receiver to 600 MHz, while observing the DVM. Observe that the voltage at pin 1 of J2 switches to +5 Vdc as the receiver is tuned past 501 MHz. Observe that the RF millivoltmeter indicates that the signal is no longer present.

8. Connect the DVM to J2 pin 3 and select Antenna 2. Observe that the voltage at pin 3 switches to +5 Vdc when Antenna 2 is selected.

9. Disconnect the RF millivoltmeter from J3 and connect it to J4. Observe that the Antenna Switch output is no less than -21 dBm, as indicated by the RF millivoltmeter.

10. Tune the HP-612A Signal Generator to 500 MHz and slowly increase the generator frequency to 1000 MHz, while observing the RF millivoltmeter. The level should vary no more than ±.5 dB from the level observed in step 9.

Courtesy of http://BlackRadios.terryo.org

11. Tune the receiver to a frequency below 499 MHz. Observe that the RF millivoltmeter indicates that the signal is no longer present at J4.

4.6.3 DIGITAL CONTROL SECTION PERFORMANCE TESTS

4.6.3.1 Microprocessor Performance Tests

1. Set the oscilloscope for a DC coupled input with the horizontal sweep set to .5 μsec/Div.

2. Using the oscilloscope, verify the presence of changing logic levels on the Address and Data Buses of the Digital control section. Changing logic levels between +3.5 V and 0 V should be observed at the following connector pins of A5XA3:

Address Bus		Data Bus	
B43-A12	B55-A10	B3-D3	B11-D7
B48-A4	B56-A7	B5-D4	B13-D0
B50-A3	B57-A11	B7-D5	B15-D1
B51-A8	B58-A6	B9-D6	B17-D2
B52-A2	B59-A0		
B53-A9	B60-A5		
B54-A1			

3. Connect the oscilloscope to the XA3 connector pins listed in **Table 4-7** and observe that the results are as described in the table.

4. Connect the oscilloscope to pin A35 of XA3 and toggle the AGC pushbutton between AGC ON and AGC OFF. Observe a logic 0 when AGC is on and a logic 1 when AGC is off.

5. Select AGC on, AM Detection and connect the oscilloscope to pin A37 of XA3. Observe a logic 0 at A37.

6. Select Pulse Detection. Observe a logic 1 present at A37.

7. Connect the oscilloscope to pin A33 of XA3 and toggle the ANT 2 pushbutton on and off. Observe a logic 0 at A33 when Antenna 1 is selected and logic 1 when Antenna 2 is selected.

Courtesy of http://BlackRadios.terryo.org

Table 4-7. Microprocessor Control Signals

Connector Pin	Description	
B49	IRQ*	Changing logic level
B14	R/W	Changing logic level
B12	R* /W*	Changing logic level
B8	RST*	Constant logic 1
B10	RST	Constant logic 0
B16	DBE	Squarewave, 1 µsec. period (symmetrical)
B18	DBDLY	Squarewave, 1 µsec. period (symmetrical)
A4	RAM clk	Squarewave, 1 µsec. period (symmetrical)
A12	CLK 1	Squarewave, 2 µsec. period (symmetrical)
A18	CLK 5	Squarewave, 32 µsec. period (symmetrical)
A14	CLK 8	Squarewave, .256 msec. period (symmetrical)
A16	CLK 11	Squarewave, 2 msec. period (symmetrical)
A34	PFAIL*	Constant logic 1

*Indicates Active Low
Logic 1 = +2.7 V Logic 0 = 0V

4.6.3.2 **Receiver Interface Performance Tests**

1. Select the bandwidth pushbuttons listed in **Table 4-8A** and observe the logic levels at the XA1 connector pins indicated in the table. These levels represent the Digital code required to activate the selected receiver bandwidth. **Table 4-8B** lists the logic levels at the XA1 and ZA2 connector pins for the selected bandwidth.

Table 4-8A. Receiver Standard Bandwidth Selection Codes

Bandwidth	XA1 A29	XA1 A27	XA1 A25
#1	0	0	0
#2	0	0	1
#3	0	1	0
#4	0	1	1
#5	1	0	0

Courtesy of http://BlackRadios.terryo.org

Table 4-8B. Receiver Dual Bandwidth Selection Codes

Bandwidth	Selected IF Slot	XA1 A29	XA1 A27	XA1 A25	XA2 B7
1A	A3A9	0	0	0	0
1B	A3A9	0	0	1	1
2A	A3A10	0	1	0	0
2B	A3A10	0	1	1	1
3A	A3A11	1	0	0	0
3B	A3A11	0	0	0	1
4A	A3A12	0	0	1	0
4B	A3A12	0	1	0	1
5A	A3A13	0	1	1	0
5B	A3A13	1	0	0	1

2. Select the Detection modes listed in **Table 4-9** and observe the logic levels at the connector pins indicated in the table. These logic levels represent the digital code required to activate the selected detection mode.

Table 4-9. Receiver Detection Mode Selection Codes

Detection Mode	XA1 A35	XA1 A33	XA1 A31
AM	0	0	0
FM	0	0	1
CW	0	1	0
PULSE	0	1	1
*USB	1	1	0
*LSB	1	0	0

*With SSB Option Installed

4.6.3.3 **Synthesizer Interface Performance Tests**

1. Select the 1 MHz Tuning Rate pushbutton on the front panel and set the receiver to the frequencies listed in **Table 4-10.** (Only 1 MHz and above tuning steps are being tested at this time. The digits below 1 MHz will not affect the results.) Using the oscilloscope, observe the logic levels at the XA2 connector pins listed in the table.

Courtesy of http://BlackRadios.terryo.org

2. The results observed in step 1 should yield BCD words equivalent to the 1st LO frequency. The decimal equivalent of the BCD words will be equal to the tuned frequency +552. As can be seen in the table, the most significant digit is omitted when the decimal equivalent is above 1000.

Table 4-10. 1st LO Synthesizer Control Words

Tuned Frequency	100 MHz Control				10 MHz Control				1 MHz Control				Decimal Equivalent
	A18	A26	A16	A24	A10	A6	A22	A28	A14	A8	A12	A4	
20.X MHz	0	1	0	1	0	1	1	1	0	0	1	0	572
25.X MHz	0	1	0	1	0	1	1	1	0	1	1	1	577
35.X MHz	0	1	0	1	1	0	0	0	0	1	1	1	587
50.X MHz	0	1	1	0	0	0	0	0	0	0	1	0	602
250.X MHz	1	0	0	0	0	0	0	0	0	0	1	0	802
456.X MHz	0	0	0	0	0	0	0	0	1	0	0	0	008

3. Return the tuned frequency to 20 MHz and select the 10 kHz Tuning Rate pushbutton. Set the receiver to the frequencies listed in **Table 4-11** and observe the logic levels at the XA2 connector pins listed in the table. (Only the 100 kHz and 10 kHz tuning steps are being tested at this time. The 1 kHz and 100 Hz digits will not affect the results.)

Table 4-11. 2nd LO Synthesizer Control Words (100 kHz and 10 kHz)

Tuned Frequency	100 kHz Control				10 kHz Control				Decimal Equivalent
	A51	A55	A47	A43	A57	A59	A49	A53	
20.01 MHz	0	0	0	0	0	0	0	1	01
20.22 MHz	0	0	1	0	0	0	1	0	22
20.35 MHz	0	0	1	1	0	1	0	1	35
20.77 MHz	0	1	1	1	0	1	1	1	77
20.99 MHz	1	0	0	1	1	0	0	1	99

4. The results obtained in step 3 should yield the BCD equivalent of the 100 kHz and 10 kHz digits present on the front panel frequency display.

Courtesy of http://BlackRadios.terryo.org

5. Return the receiver frequency to 20.00 MHz and select the 100 Hz Tuning Rate pushbutton. Set the receiver to the frequencies listed in **Table 4-12** and observe the logic levels present at the XA2 connector pins listed in the table.

Table 4-12. 2nd LO Synthesizer Control Words (1 kHz and 100 Hz)

Tuned Frequency	1 kHz Control				100 Hz Control				Decimal Equivalent
	A48	A44	A50	A52	A56	A58	A60	A54	
20.0000	0	0	0	0	0	0	0	0	00
20.0013	0	0	0	1	0	0	1	1	13
20.0067	0	1	1	0	0	1	1	1	67
20.0089	1	0	0	0	1	0	0	1	89

6. The results obtained in step 5 should yield the BCD equivalent of the 1 kHz and 100 Hz digits present on the front panel frequency display.

7. Tune the receiver to the frequencies listed in **Table 4-13** and observe the logic levels present at XA2 connector pins listed in the table. These logic levels form a digital code which selects UHF or VHF operation, activates the appropriate RF preselector and selects the correct UHF LO frequency. Frequencies above 500 MHz require the 500-1100 MHz Frequency Extender to be installed on the RF/IF Motherboard.

8. Select AGC OFF and rotate the RF/IF gain control to its Fully CCW position.

9. Connect the DVM to pin B5 of XA2 and adjust the RF/IF Gain between its maximum CCW to maximum CW position. Observe that the DVM reading continuously decreases from 5.0 to 0 Vdc ±10%.

10. Connect the DVM to pin B7 of XA2 and set the COR LEVEL Display to 00, using the front panel COR pushbuttons.

Courtesy of http://BlackRadios.terryo.org

Table 4-13. RF Preselector and UHF VCO Control

	UHF2 A34	UHF2 A36	UHF/VHF A32	VHF3 A3	VH2 A7	VHF1 A5	
25.0000	0	0	0	0	0	0	20-30 MHz preselector
35.0000	0	0	0	0	0	1	30-47 MHz preselector
60.0000	0	0	0	0	1	0	47-75 MHz preselector
100.0000	0	0	0	0	1	1	75-120 MHz preselector
150.0000	0	0	0	1	0	0	120-187 MHz preselector
250.0000	0	0	0	1	0	1	187-292 MHz preselector
350.0000	0	0	0	1	1	0	292-382 MHz preselector
450.0000	0	0	0	1	1	1	382-500 MHz preselector
550.0000	0	0	1	1	1	0	500-700 MHz preselector UHF VCO = 848 MHz
650.0000	0	1	1	1	1	0	500-700 MHz preselector UHF VCO = 944 MHz
800.0000	1	0	1	1	1	0	700-900 MHz preselector UHF VCO = 1144 MHz
1000.0000	1	1	1	1	1	0	900-1100 MHz preselector UHF VCO = 1344 MHz

11. Step the COR LEVEL up to 40 while observing DVM. The voltage should increase from 0 ±.1 to 5.0 ±.4 Vdc in steps of approximately .125 Vdc.

4.6.4 SYNTHESIZER SECTION PERFORMANCE TESTS

4.6.4.1 Reference Generator Performance Tests

1. Connect the frequency counter to the 1 MHz Ref connector (J8) on the receiver rear panel. Observe the frequency displayed on the counter. The frequency should be 1 MHz ±1 Hz.

Courtesy of http://BlackRadios.terryo.org

2. Remove the frequency counter and connect the oscilloscope at J8 and observe the waveform present. Observe that the waveform viewed is a distorted sine wave with an amplitude of approximately 2 V p/p.

3. Connect the frequency counter first to connector pin 17 of XA1, then to connector pin 49. Observe that the frequency present at both connector pins is 250 kHz. The accuracy of the 250 kHz signal is determined by the accuracy of the 1 MHz reference, measured in step 1.

4. Connect the frequency counter to connector pin 55 of XA1 and observe the frequency present. This frequency should be 25 kHz. The accuracy of the 25 kHz signal is determined by the accuracy of the 1 MHz reference observed in step 1.

5. Remove the frequency counter and observe the waveform present at connector pins 17, 49 and 55. The waveform present at each connector pin should be a symmetrical square wave switching between 0 and approximately +4 V.

4.6.4.2 **1st LO Synthesizer Performance Tests**

1. Connect the frequency counter to the 1st LO Synthesizer output jack A1J1. Reference the frequency counter to the 1 MHz REF output of the receiver, J8.

2. Using the oscilloscope, verify the presence of the 250 kHz reference, from the reference generator, at connector pin 12 of XA2.

3. Tune the receiver to the frequencies listed in **Table 4-14** and observe the 1st LO frequency varies as listed.

4. If the results are not as listed in **Table 4-14,** use the oscilloscope to verify the BCD control words provided at the indicated XA2 connector pins.

5. Remove the frequency counter from A1J1 and connect the RF millivoltmeter and 50 ohm load. Observe that the output level is at least +3 dBm.

6. Tune the receiver through the 20-500 MHz frequency range while observing the output level on the RF millivoltmeter. Observe that the output level of at least +3 dBm is present throughout the frequency range of the 1st LO.

Courtesy of http://BlackRadios.terryo.org

Table 4-14. 1st LO Synthesizer Frequency Versus Tuned Frequency

Tuned Frequency (MHz)	1st LO Frequency (MHz) A1J1	Control Logic Input (A4XA2)											
		100 MHz				10 MHz				1 MHz			
		46	45	48	47	13	15	44	43	4	3	5	6
20.0000	572	0	1	0	1	0	1	1	1	0	0	1	0
25.0000	577	0	1	1	1	0	1	1	1	0	1	1	1
50.0000	602	0	1	1	0	0	0	0	0	0	0	1	0
250.0000	802	1	0	0	0	0	0	0	0	0	0	1	0
336.0000	888	1	0	0	0	1	0	0	0	1	0	0	0
499.0000	1051	0	0	0	0	0	1	0	1	0	0	0	1

* ±1 Hz frequency accuracy should be observed when the frequency counter is referenced to the 1 MHz reference of the receiver (J8).

4.6.4.3 **2nd LO Synthesizer Performance Tests**

4.6.4.3.1 **535 MHz Generator Performance Tests**

1. Connect the frequency counter to the 535 MHz output jack of the 535 MHz Generator, A4A6J2. Reference the frequency counter to the 1 MHz REF output of the receiver at rear panel connector, J8.

2. Observe that the output frequency is locked at 535.000 MHz, as indicated by the frequency counter.

3. Remove the frequency counter and connect the RF millivoltmeter and 50 ohm load to output jack A4A6J2.

4. Observe the 535 MHz output level. The output level should be -5 dBm ±2 dB.

5. Remove the RF millivoltmeter and 50 ohm load and reconnect P5 of W2 to A4A6J2.

Courtesy of http://BlackRadios.terryo.org

4.6.4.3.2 **4.4-5.4 MHz Synthesizer Performance Tests**

1. Connect the frequency counter to the 4.4-5.4 MHz output of the 4.4-5.4 MHz Synthesizer, A4A4J1. Reference the frequency counter to the 1 MHz REF output of the receiver at rear panel connector, J8.

2. Tune the receiver to the RF frequencies listed in **Table 4-15** while observing the indication on the frequency counter. Observe that the 4.4-5.4 MHz Synthesizer output frequency locks at the output frequencies listed in the table at A4A4J1.

Table 4-15. 4.4-5.4 MHz Synthesizer Output Frequency Versus Tuned Frequency

Tuned Frequency (MHz)	4.4-5.4 Output (MHz)	100 kHz				10 MHz				1 kHz				100 Hz			
		12	3	15	14	2	1	13	4	8	9	6	5	3	2	1	4
20.0000	4.4000	0	0	0	0	0	0	0	0	0	0	0	0	0	0	0	0
20.0001	4.4001	0	0	0	0	0	0	0	0	0	0	0	0	0	0	0	1
20.0002	4.4002	0	0	0	0	0	0	0	0	0	0	0	0	0	0	1	0
20.0012	4.4012	0	0	0	0	0	0	0	0	0	0	0	1	0	0	1	0
20.0022	4.4022	0	0	0	0	0	0	0	0	0	0	1	0	0	0	1	0
20.0122	4.4122	0	0	0	0	0	0	0	1	0	0	1	0	0	0	1	0
20.0222	4.4222	0	0	0	0	0	0	1	0	0	0	1	0	0	0	1	0
20.1222	4.5222	0	0	0	1	0	0	1	0	0	0	1	0	0	0	1	0
20.2222	4.6222	0	0	1	0	0	0	1	0	0	0	1	0	0	0	1	0
20.5555	4.9555	0	1	0	1	0	1	0	1	0	1	0	1	0	1	0	1
20.7777	5.1777	0	1	1	1	0	1	1	1	0	1	1	1	0	1	1	1
20.9999	5.3999	1	0	0	1	1	0	0	1	1	0	0	1	1	0	0	1

3. Retune the receiver to 20.000 MHz and slowly increase the tuned frequency while observing the frequency counter indication. Observe that for each 100 Hz, 1 kHz, 10 kHz and 100 kHz change in tuned frequency, the frequency counter indication changes by an equal amount.

4. If the results obtained in step 2 and 3 are not as described, use the oscilloscope to verify the BCD control words at the connector pins indicated in **Table 4-15.**

5. Remove the frequency counter and reconnect P8 at A4A4J1.

Courtesy of http://BlackRadios.terryo.org

4.6.4.3.3 **Translation Oscillator Performance Tests**

1. Disconnect P54 from the 2nd Converter LO input at A3A7A1J1, and connect the frequency counter at P54.

2. Tune the receiver to the RF frequencies listed in **Table 4-16** while observing the indication on the frequency counter. Observe that the 2nd LO Output locks at the 2nd LO Output frequencies as listed in the table.

3. If the counter fails to display the 2nd LO frequency, verify that +4 dBm ±1 dB of RF power is present at cable P54. If this power level is not present, connect a test cable directly to A4A3J2. If the level at A4A3J2 is correct, check cables W24, W10 and W27.

4. Remove the frequency counter and connect the RF millivoltmeter and 50 ohm load at A4A3J2.

5. Tune the receiver between 20.0000 and 20.9999 MHz while observing the output on the RF millivoltmeter. The output should be +4 dBm ±1 dB, throughout the 2nd LO frequency range.

6. Remove the RF millivoltmeter and reinstall P59 at A4A3J2

Table 4-16. 2nd LO Frequency Versus Tuned Frequency

Tuned Frequency (MHz)	2nd LO Frequency (MHz)	Tuned Frequency (MHz)	2nd LO Frequency (MHz)
20.0000	530.6000	29.2234	530.3766
20.0001	530.5999	20.3234	530.2766
20.0002	530.5998	20.4234	530.1766
20.0013	530.5987	20.6234	529.9766
20.0023	530.5977	20.7234	529.8766
20.0123	530.5877	20.8234	529.7766
20.0223	530.5777	20.9234	529.6766
20.1234	530.4766	20.9999	529.6001

4.6.4.4 **SSB BFO Performance Test**

1. Connect the oscilloscope at connector pin 45 of XA5 on the synthesizer motherboard.

2. Using the front panel pushbuttons, switch between the AM and CW detection modes. Observe that a 21.4 MHz sinewave is present when the CW mode is selected and this signal is absent when the AM mode is selected.

Courtesy of http://BlackRadios.terryo.org

3. If the 21.4 MHz signal is not observed, as described in step 2, connect the oscilloscope at connector pin 53 to verify that the 10.7 MHz signal from the Reference Generator is present at the SSB BFO input.

4. Remove the oscilloscope from pin 53 and connect it to the CW BFO ON/OFF input (pin 49 of XA5). Monitor the logic level at this line while switching between the AM and CW detection modes. A TTL logic "1" should be present when the CW mode is selected and a logic "0" should be present when the AM mode is selected.

4.7 ALIGNMENT PROCEDURES

The alignment procedures that follow should not be performed on a routine basis. These procedures should be used after repairs have been made or as a touch-up alignment when a subassembly is replaced. Only after it is determined that alignment is necessary, should any adjustment be made.

4.7.1 RF/IF SECTION ALIGNMENT PROCEDURES

4.7.1.1 VHF High-Band Preselector (A3A3) Alignment

1. Extend the VHF High-Band Preselector subassembly (A3A3).

2. Connect the HP-8640B signal generator to the EXTMARK input of the Wiltron 640 RF Analyzer and adjust the signal generator to the center frequency of the preselector to be tested, as listed in **Table 4-17.** Set the MARKER SPACING control on the RF analyzer to EXT and tune the analyzer frequency control until the marker is at the center of the CRT trace.

3. Set the output of the Wiltron 640 to -10 dBm and select 2 dB/DIV on the Log Transmission plug-in. Connect RF out to the RF in and calibrate the analyzer to provide a convenient reference.

4. Connect the test equipment as illustrated in **Figure 4-11.**

5. Tune the receiver to a frequency within the passband of the preselector to be aligned and adjust the sweep width controls of the analyzer to produce a suitable response on the CRT. Determine the upper and lower band-edge frequencies by tuning the HP-8640B Generator to first the upper and then the lower frequency limits of the preselector, as listed in the Preselector Under Test column of **Table 4-17.** In each case, note the point on the trace where the marker occurs.

Courtesy of http://BlackRadios.terryo.org

6. Adjust the tuning components for the preselector under Test, as listed in **Table 4-17,** for the flattest overall response within the frequency limits of the preselector. The flat portion of the response should be no more than 2 dB (1 division on the CRT) down from the reference set in step 3, with no more than .5 dB of variation within the passband.

7. Refer to **Figure 4-12A** through **4-12D** for the typical responses for each of the High-Band Preselectors.

8. If alignment of the VHF Low-Band Preselector is to be performed, leave the test equipment connected and install the VHF High-Band Preselector into its appropriate connector on the RF/IF Motherboard. Otherwise, disconnect the test equipment.

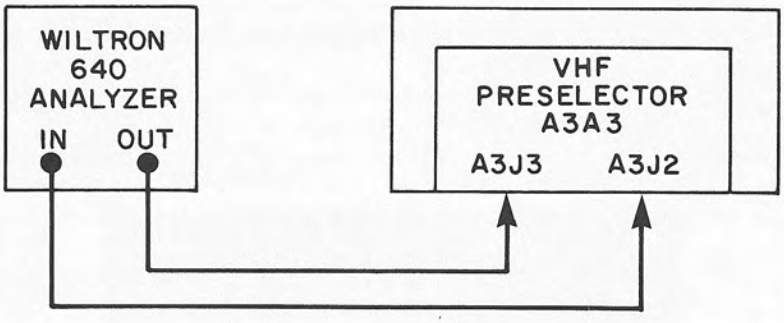

Figure 4-11. VHF Preselector Alignment, Equipment Connections

Table 4-17. VHF High-Band Preselector Alignment Data

Preselector Under Test (MHz)	Preselector Center Frequency (MHz)	Tuning Components
382-500	442	C10, C11, C12
292-382	337	C16, C18, C20
187-292	240	L16 through L20, C36, C41
120-187	152	L23 through L27, C58, C63

Courtesy of http://BlackRadios.terryo.org

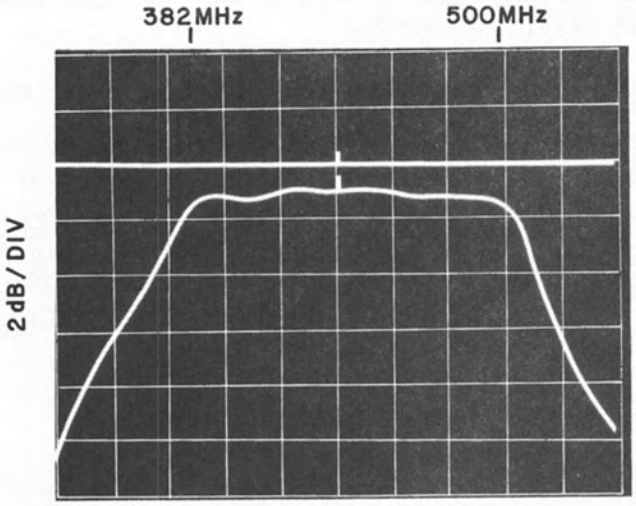

Figure 4-12A. 382-500 MHz Preselector, Typical Response

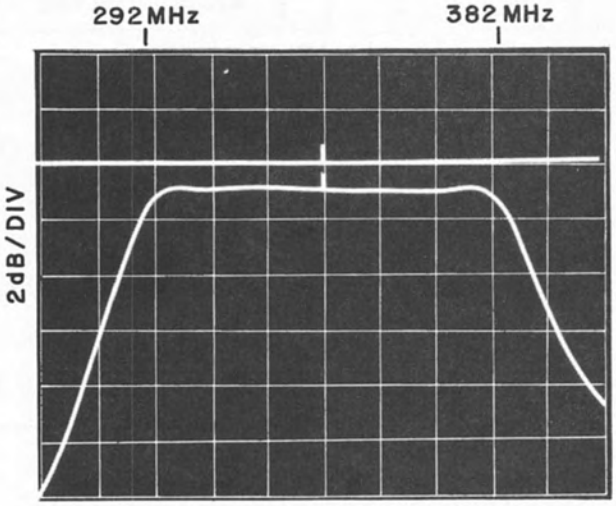

Figure 4-12B. 292-382 MHz Preselector, Typical Response

Courtesy of http://BlackRadios.terryo.org

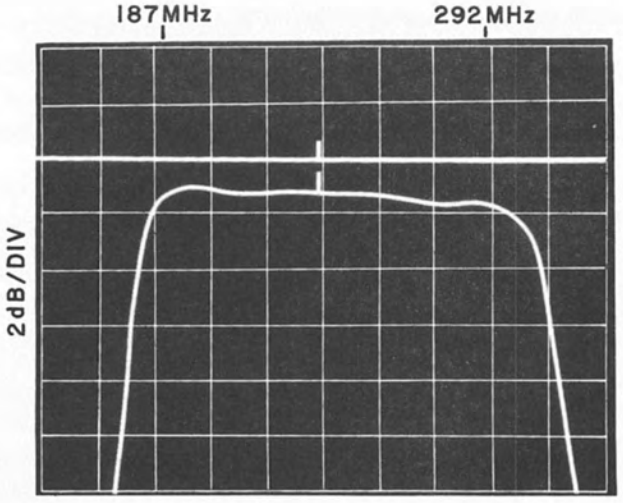

Figure 4-12C. 187-292 MHz Preselector, Typical Response

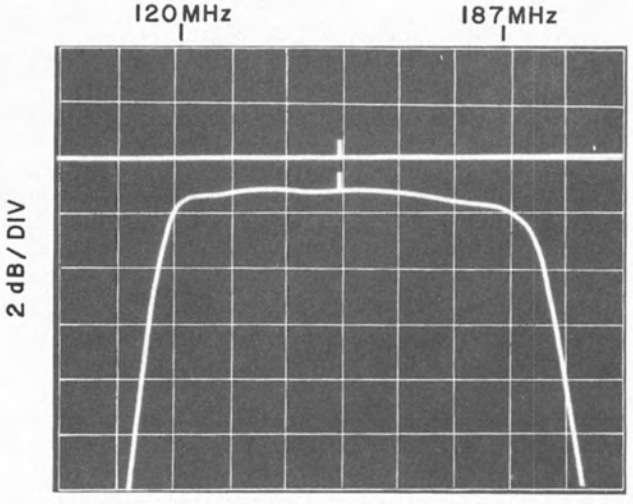

Figure 4-12D. 120-187 MHz Preselector, Typical Response

Courtesy of http://BlackRadios.terryo.org

4.7.1.2 **VHF Low-Band Preselector (A3A4) Alignment**

1. Perform steps 2 and 3 of **paragraph 4.7.1.1**, except, use the center frequencies listed in **Table 4-18.**

2. Connect the test equipment to the High-Band Preselector (A3A3) as illustrated in **Figure 4-11** and reinstall A3A3 into its appropriate slot. Extend the VHF Low-Band Preselector (A3A4).

3. Tune the receiver to a frequency within the passband of the preselector to be aligned and adjust the sweepwidth controls of the analyzer to produce a suitable response on the CRT. Determine the upper and lower band-edge frequencies by tuning the HP-8640B Generator to first the upper and then the lower frequency limits of the preselector, as listed in the Preselector Under Test column of **Table 4-18.** In each case, note the point on the trace where the marker occurs.

4. Adjust the tuning components for the preselector under test, as listed in **Table 4-18,** for the flattest overall response within the limits of the preselector. The flat portion of the response should be no more than 2 dB (1 division on the CRT) down from the reference set in step 3 of **paragraph 4.7.1.1,** with no more than .5 dB of variation within the passband. Verify insertion loss for all four bands is no greater than 3 dB.

Table 4-18. VHF Low-Band Preselector Alignment Data

Preselector Under Test (MHz)	Preselector Center Frequency (MHz)	Tuning Components
75 - 120	97	L26 through L30
47 - 75	61	L19 through L23
30 - 47	38	L12 through L16
20 - 30	25	L5 through L9

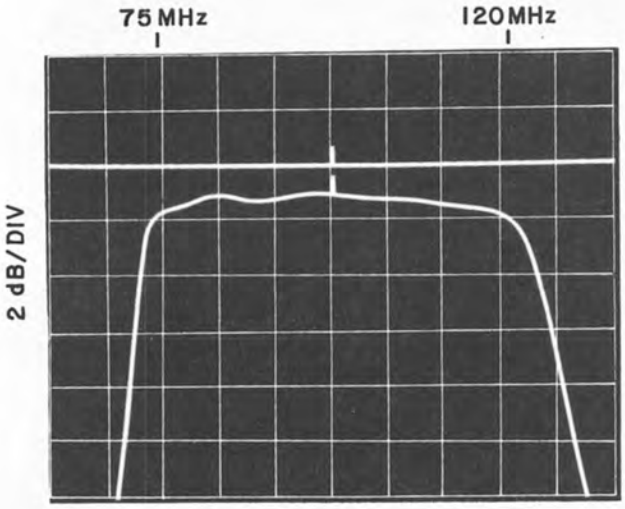

Figure 4-13A. 75-120 MHz Preselector, Typical Response

Courtesy of http://BlackRadios.terryo.org

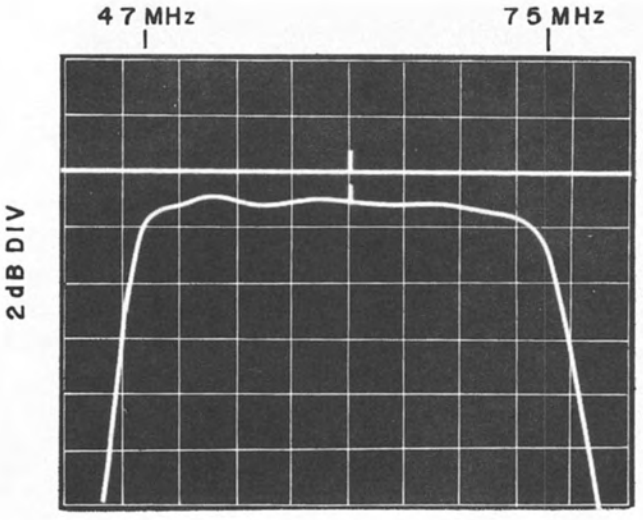

Figure 4-13B. 47-75 MHz Preselector, Typical Response

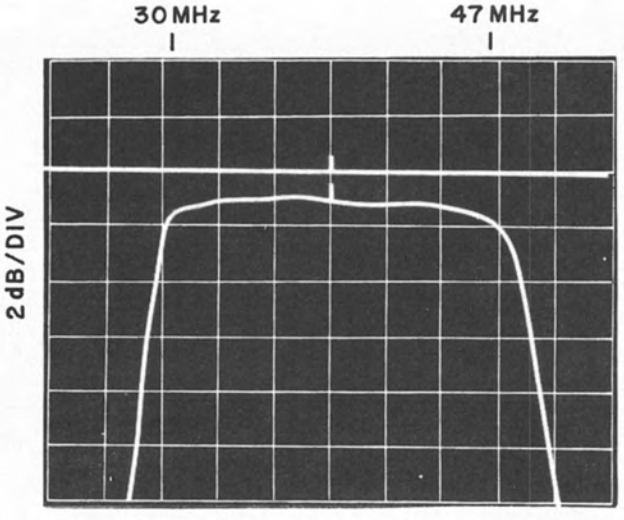

Figure 4-13C. 30-47 MHz Preselector, Typical Response

Courtesy of http://BlackRadios.terryo.org

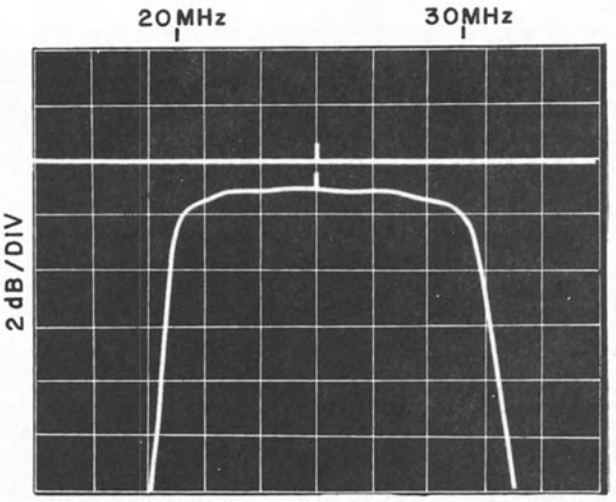

Figure 4-13D. 20-30 MHz Preselector, Typical Response

4.7.1.3 <u>VHF Preamplifier (A3A5) Alignment</u>

1. Extend the VHF Preamplifier module (A3A5) and connect the test equipment as illustrated in **Figure 4-14.**

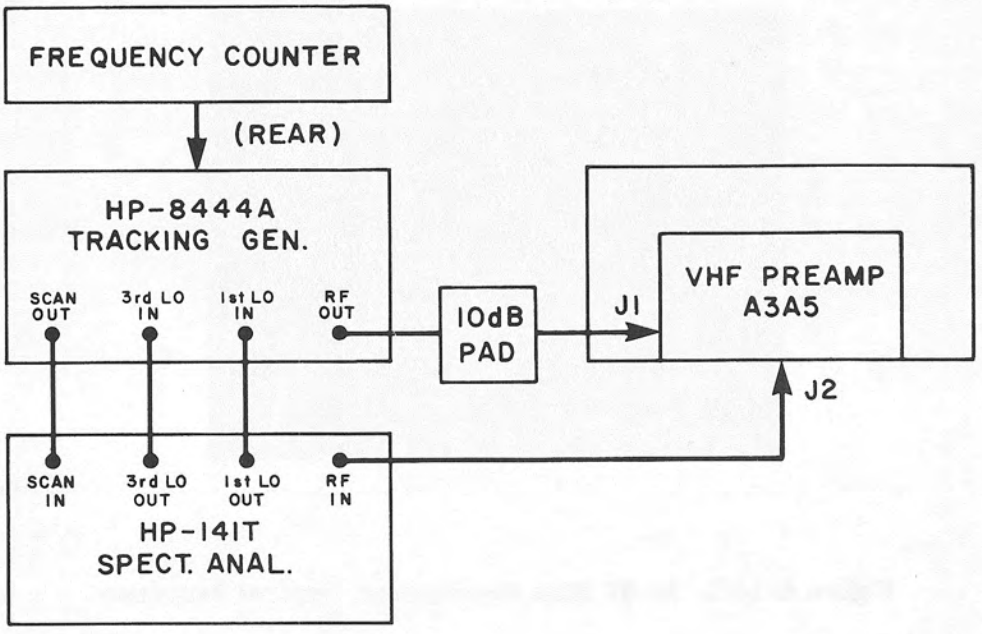

Figure 4-14. VHF Preamplifier Alignment, Equipment Connections

Courtesy of http://BlackRadios.terryo.org

2. Place the spectrum analyzer in the manual mode with a 1 MHz per division scan. Adjust the analyzer frequency to the null frequencies listed below. Observe the frequency counter for an indication of the tuned frequency. At each of the listed frequencies adjust the appropriate capacitor for a null.

Null Frequency	Capacitor
553.5 MHz	C6
582.0 MHz	C4
690.0 MHz	C8
1200.0 MHz	C2

3. Repeat step 2 as required to obtain the best null at each frequency.

4. Set the analyzer to internal scan and select the 100 MHz per division scan width. Tune the analyzer frequency to 600 MHz.

5. Readjust C2, C4, C6 and C8 for the best overall response as illustrated in **Figure 4-15.** Adjust for the best response, as follows:

   a) The response from 20 to 500 MHz must be flat, within ±2 dB.

   b) The response at 551.5 MHz must be down by at least 52 dB from the 500 MHz response.

   c) The peaks between the null frequencies must be at least 50 dB below the 500 MHz response.

   Capacitor C2 has the greatest effect on the bandpass ripple between 20 and 500 MHz and C4, C6 and C8 have the greatest effect on the cutoff frequency adjustment.

6. Set the analyzer to the manual mode of operation and tune the frequency to 400 MHz.

7. On the receiver, select AGC OFF and rotate the RF/IF Gain control fully CW.

8. Connect the DVM at the junction of R5 and R6 and adjust R29 until the voltage just begins to go positive. Note the response level on the spectrum analyzer.

9. Rotate the RF/IF Gain control fully CCW. Adjust R13 until the response level is 20 dB below the level noted in step 8.

Courtesy of http://BlackRadios.terryo.org

10. Repeat steps 7 through 9 until interaction between adjustments is minimized.

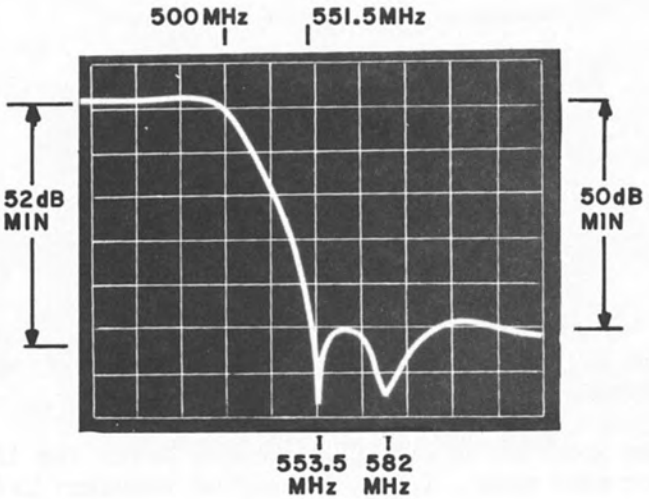

Figure 4-15. Type 370285 500 MHz LP Filter, Typical Response

11. Remove the test equipment and reinstall the VHF Preamplifier into the receiver.

4.7.1.4 **1st Converter (A3A6) Alignment**

1. Extend the 1st Converter (A3A6) subassembly and position the receiver to permit access to the tuning capacitors, at the back of the subassembly. (Subassembly cover must be left on.)

2. Set the Wiltron 640 RF Analyzer to sweep about a 450 MHz frequency with a sweep width of 1 MHz per division. Set the output level to -20 dBm.

3. Connect the RF Output of the RF Analyzer to its RF input and calibrate the Analyzer trace.

4. Connect the RF Analyzer as illustrated in **Figure 4-16** and tune the receiver to 450.0000 MHz. (P53 must be connected to A3A6J2, 1st Converter LO input.)

Courtesy of http://BlackRadios.terryo.org

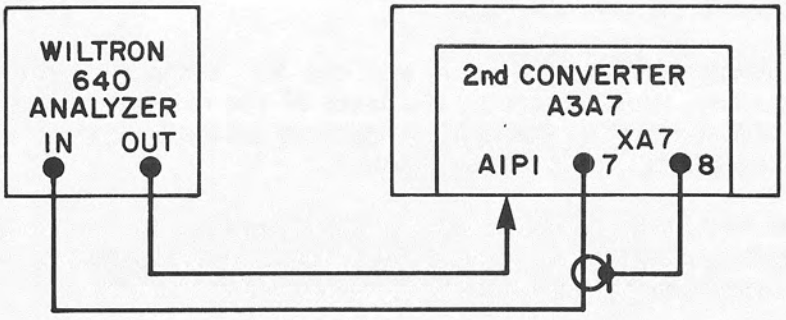

Figure 4-16. 1st Converter Alignment, Equipment Connections

5. Adjust Capacitors C4, C6, C8, C9, C11, C13 and C15 for the maximum gain and flattest response about the 552 MHz center frequency (center of the CRT Horizontal scale). Adjust C3 for gain. Refer to **Figure 4-17** for the typical 1st Converter response.

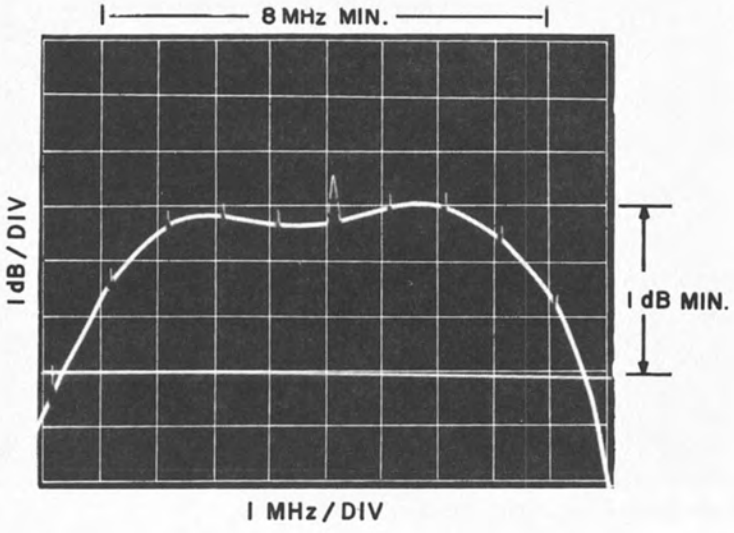

Figure 4-17. 1st Converter Alignment, Typical Response

Courtesy of http://BlackRadios.terryo.org

6. Repeat step 5 until an 8 MHz (minimum) response curve is obtained at a level of at least +1 dB above the reference set in step 3. The ripple, within the bandwidth, should be no greater than .5 dB peak-to-peak.

7. Slowly tune the receiver and the RF Analyzer down in frequency, while observing the level of the response curve on the Analyzer CRT. The gain should vary no more than -1 or +2 dB throughout the frequency range.

8. If necessary, readjust the tuning capacitors at the lowest gain point, observed in step 7, to obtain the best overall response across the 20-500 MHz tuning range of the receiver.

4.7.1.5 **2nd Converter (A3A7) Alignment**

1. Extend the 2nd Converter subassembly, using the appropriate extender card, and remove the LO Amplifier (A3A7A1) cover. Remove the IF Amplifier installed in the XA9 slot of the RF/IF Motherboard. Turn the receiver power on, while holding the FUNCTION key pressed in.

2. Tune the receiver to 20.0000 MHz and select AGC OFF. Set the RF/IF gain to Maximum, by rotating the RF/IF Gain control fully CW. Select the #1 IF bandwidth.

3. Set the Wiltron 640 RF Analyzer to sweep about a 552 MHz frequency, with a sweepwidth of 1 MHz per division. Set the output level to -20 dBm.

4. Connect the RF Output of the Analyzer to its input and set a convenient reference. Readjust the analyzer such that 552 MHz is at the center of the trace. (Use the internal markers of the generator to locate 552 MHz.)

5. Connect the RF Analyzer to the 2nd Converter, as illustrated in **Figure 4-18.**

6. Adjust coils L6, L7 and L8 for the flattest response, with a 1 dB bandwidth of 6 MHz (minimum) as illustrated in **Figure 4-19.** The subassembly gain should be 13 ±1 dB greater than the reference set in step 4.

7. Tune receiver to 20.9999 MHz and tune the Analyzer to 551 MHz. Observe that the response remains as stated in step 6. Readjust L6, L7 and L8 as required to obtain a uniform response at both frequency settings.

Courtesy of http://BlackRadios.terryo.org

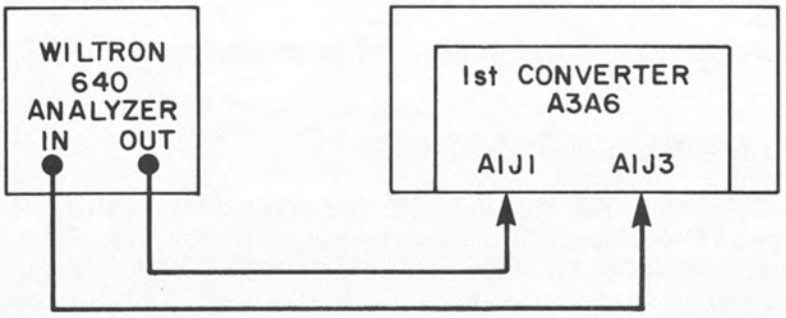

Figure 4-18. 2nd Converter Alignment, Equipment Connections

8. Reinstall the cover on the LO Amplifier Assembly.

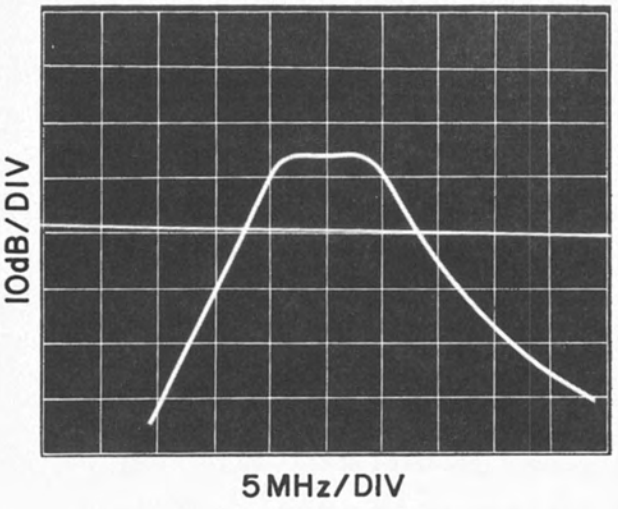

Figure 4-19. 2nd Converter Alignment, Typical Response

Courtesy of http://BlackRadios.terryo.org

9. Rotate the RF/IF Gain Control, on the receiver front panel, to obtain -1.5 Vdc at pin 5 of XA7. Adjust R2 until the response amplitude is 5 ±1 dB below the level noted in step 6.

10. Rotate the RF/IF Gain control fully CCW and adjust R15 until the response amplitude is 38 ±2 dB below the amplitude noted in step 6.

11. Readjust R2 and R15 as required to obtain the stated results.

4.7.1.6 **AM Demodulator (A3A16) Alignment**

1. Extend the AM Demodulator subassembly (A3A16), using the Type 798076-1, short extender card. Remove the IF Amplifier installed in the #1 IF bandwidth slot (XA9). Hold the FUNCTION pushbutton pressed in, while turning the receiver power on.

2. Connect the test equipment as illustrated in **Figure 4-20.**

3. Select the #1 IF bandwidth and select AGC OFF, with the RF/IF Gain fully CW.

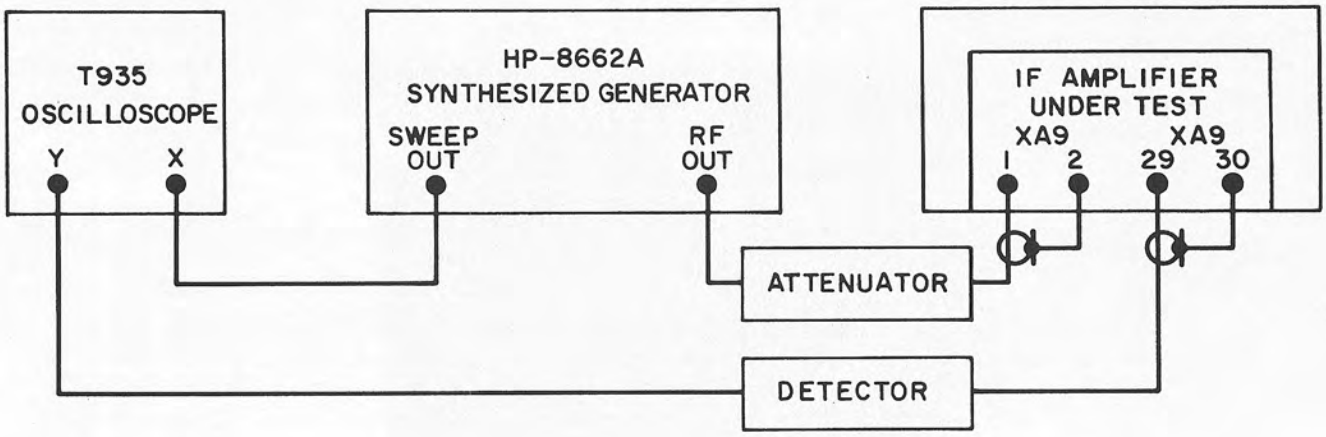

Figure 4-20. AM Demodulator Alignment, Equipment Connections

4. Adjust the sweep generator to produce a 10 MHz wide sweep, centered at 21.4 MHz. Set the output level to 0 dBm and adjust the attenuator to 56 dB of attenuation. Activate the 21.4 MHz marker.

Courtesy of http://BlackRadios.terryo.org

5. Connect the + output of the dc power supply to pin 11 of XA9 and connect the - output to pin 27 (GND). Adjust the output of the power supply to +5.00 Vdc, to activate the wideband post filter.

6. Set the oscilloscope vertical sensitivity to 0.2 V/div.

7. Adjust C9 and C42 for the best wideband response, centered at 21.4 MHz. The oscilloscope response should be centered at 21.4 MHz, with a 1 dB bandwidth of 4 MHz, minimum, as illustrated in **Figure 4-21.**

8. Reset the sweep generator to sweep .5 MHz about the 21.4 MHz center frequency. Decrease the power supply output to +2.00 Vdc, to select the narrowband Post-Filter.

9. Adjust C26 and C28 for the best response. The response should be centered at 21.4 MHz with a 1 dB bandwidth of between 200 and 400 kHz, as illustrated in **Figure 4-22.**

10. Set the generator to produce a fixed 21.4 MHz CW signal and set the attenuator for 57 dB of attenuation. Connect the DVM at TP1 (brown) of the AGC Amplifier (A3A8) and connect the RF millivoltmeter and 50 ohm load at the switch IF output of the receiver (J1).

11. Adjust R23 for a +1.25 Vdc indication on the DVM. Turn AGC on and adjust R59 for a -30.0 dBm indication on the RF millivoltmeter.

12. Remove the DVM from TP1 and connect it to TP3 (orange) on the AGC Amplifier.

13. Adjust R62, R69 and R72 to midrange.

14. Remove the 21.4 MHz input signal from the board and adjust R69 to produce a +0.4 Vdc indication on the DVM.

15. Reconnect the 21.4 MHz input signal at connector pins 43 and 44 and set the attenuator for 76 dB of attenuation. Adjust R62, as required, to produce +0.6 Vdc at TP3 of A3A8.

16. Set the attenuator for 36 dB of attenuation. Adjust R72 for a +5.4 Vdc indication on the DVM.

17. Repeat steps 14 through 16 to minimize interaction between adjustments.

18. Reinstall the AM Demodulator into the receiver and recheck the subassembly operation. Slight changes in the operation may occur when the subassembly is reinstalled. Minor readjustments may be required.

Courtesy of http://BlackRadios.terryo.org

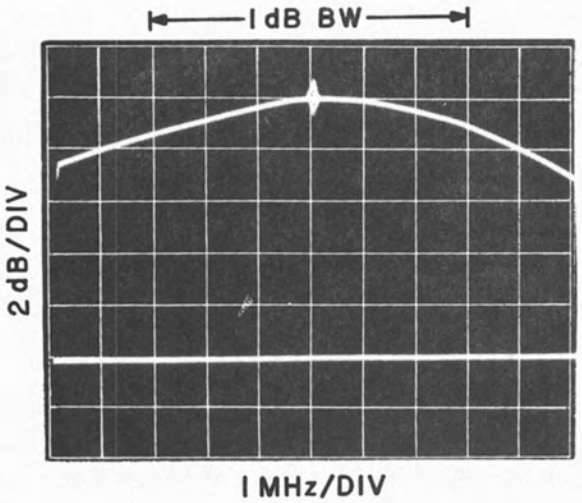

Figure 4-21. AM Demodulator Wideband Alignment, Typical Response

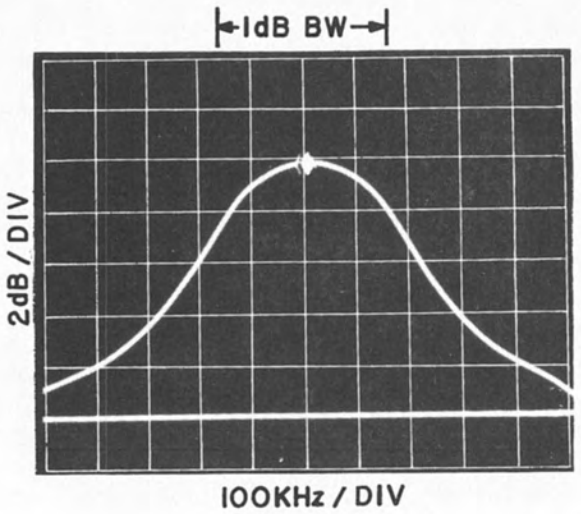

Figure 4-22. AM Demodulator Narrow-Band Alignment, Typical Response

Courtesy of http://BlackRadios.terryo.org

4.7.1.7 **AGC Amplifier (A3A8) Alignment**

1. The following test requires a properly aligned 10, 20 or 75 kHz IF Amplifier installed in the #1 IF bandwidth slot (XA9).

2. Extend the AGC Amplifier (A3A8) and set R9, R12, R66 and R72 to mid-range. Set R20 fully CCW.

3. Connect the DVM between connector pin 8 and ground and adjust R66 for -12.0 Vdc (±.2 Vdc).

4. Place the DVM at pin 10 of U6 and adjust R70 for -0.10 Vdc at this point.

5. Set the receiver to 450.0000 MHz, AGC on, ANT 1 and select bandwidth #1.

6. With no signal input, adjust R72 for a front panel signal display as follows:

#1 IF BW	Signal Strength Display
10 kHz	-122
20 kHz	-119
75 kHz	-113

7. Connect the signal generator at the Antenna 1 input. Set the generator to 450.0000 MHz and set the output to the level that corresponds to the installed IF bandwidth listed below. Adjust R9 for the signal strength display reading that corresponds to the installed IF bandwidth.

IF Bandwidth	RF Input	Signal Strength Display
10 kHz	-82 dBm	-82
20 kHz	-79 dBm	-79
75 kHz	-73 dBm	-73

8. Repeat steps 6 and 7 until interaction between adjustments is minimized.

9. Increase the generator output by 1 dB. Slowly turn R70 CCW until the signal strength display reads 1 dBm greater than the generator output level and then back off until the output of the generator and the signal strength display are equal.

10. Increase the generator output to the level listed as follows for the installed IF bandwidth. Adjust R12 for the signal strength display that corresponds to the IF bandwidth.

Courtesy of http://BlackRadios.terryo.org

IF Bandwidth	RF Input	Signal Strength Display
10 kHz	-61 dBm	-61
20 kHz	-58 dBm	-58
75 kHz	-52 dBm	-52

11. Repeat steps 7 through 10 as required to minimize interaction between adjustments.

12. Connect the RF millivoltmeter and 50 ohm load at the switched IF output of the receiver (J1). Select AGC OFF and rotate the RF/IF Gain control fully CW.

13. Adjust the generator output level to produce a -30.0 dBm indication on the RF millivoltmeter.

14. Rotate the RF/IF Gain control fully CCW and increase the generator output level by 90 dB.

15. Adjust R20 for a -30.0 dBm indication on the RF millivoltmeter.

16. Reinstall the AGC Amplifier into the receiver.

4.7.1.8 **Audio/Video/COR (A3A15) Alignment**

1. The following test requires that the #1 IF bandwidth slot (XA9) contain an IF Amplifier with a 10, 20 or 75 kHz bandwidth. A matching FM Demodulator must be installed in slot XA17.

2. Connect the test equipment as illustrated in **Figure 4-23.**

3. Tune the receiver to 20.0000 MHz and select AGC ON, Bandwidth #1, FM Detection and Antenna 1.

4. Set the signal generator to produce a 20.000 MHz signal, modulated at a 400 Hz rate. Set the peak deviation to 30% of selected FM bandwidth. Adjust the output level of the generator as listed below for the installed IF bandwidth:

IF Bandwidth	RF Output
10 kHz	-104 dBm
20 kHz	-101 dBm
75 kHz	-95 dBm

5. Set R4, R12 and R47 (on the A3A15 subassembly) to midrange.

Courtesy of http://BlackRadios.terryo.org

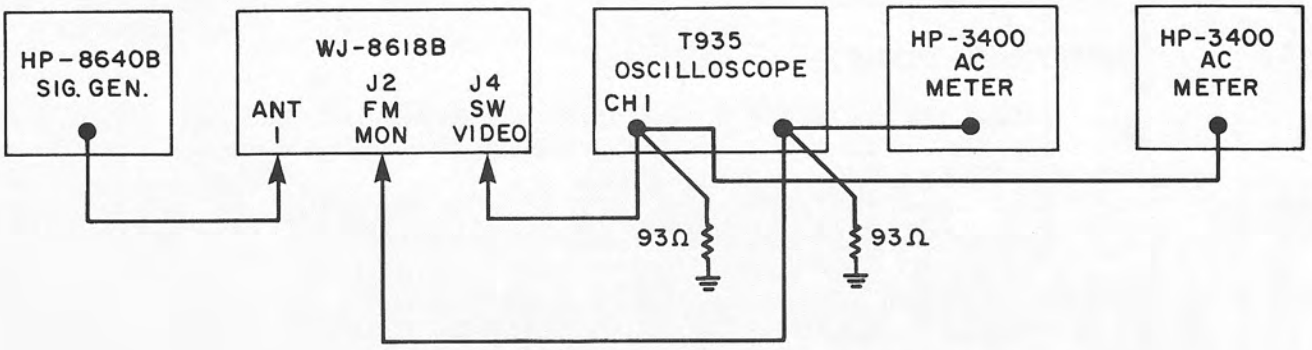

Figure 4-23. Audio/Video/COR Alignment, Equipment Connections

6. Adjust R4 for a 2.5 V p/p signal on channel 2 of the oscilloscope (approximately .884 V rms on the 400 EL).

7. Observe the switched video output level on the AC voltmeter, connected to Channel 1 of the oscilloscope, and adjust R47 for a .4 V rms indication on the AC voltmeter.

8. Select AM modulation on the signal generator and set the modulation for 50% at a 400 Hz rate. Select AM Detection on the receiver.

9. Adjust R12 for the same AC voltmeter level noted in step 7.

10. Connect the AC voltmeter and the oscilloscope at the rear panel audio output (J3). Terminate the output into 600 ohms. Adjust the rear panel line audio control, R3, maximum CCW.

11. Increase the signal generator output to -20 dBm and adjust the AM modulation to 90%. Observe that the AC voltmeter is reading less than 2.4 V rms and there is no clipping present on the signal displayed on the oscilloscope.

12. Return the modulation to 50% and reduce the generator output level to the level set in step 4.

Courtesy of http://BlackRadios.terryo.org

13. Adjust the rear panel Line Audio control for 2.45 V rms (6.93 V p/p).

4.7.2 SYNTHESIZER SECTION ALIGNMENT PROCEDURES

4.7.2.1 Reference Generator (A4A1) Alignment

1. Extend the Reference Generator subassembly (A4A1) and connect the DVM between the tuning voltage test point (connector pin 7) and ground (connector pin 8).

2. Adjust C15 for a +3.50 Vdc indication on the DVM.

3. Connect the frequency counter at pin 5 (signal) and pin 6 (ground) of connector XA1 and observe the frequency at this point. The counter should indicate a frequency of 10.7000 MHz ±1Hz.

4. Remove the DVM and reinstall the Reference Generator into slot XA1.

4.7.2.2 1st LO Synthesizer (A4A2) Alignment

Alignment of the 1st LO Synthesizer is determined by the programming of EPROMs U1 and U2 on the Diode Control subassembly (A4A2A2). Should alignment be required, the complete 1st LO synthesizer must be returned to the factory for reprogramming.

4.7.2.3 535 MHz Generator (A4A6) Alignment

1. Remove the 535 MHz Generator module (A4A6) from the receiver chassis and remove the cover to expose the A4A6A2 VCO. This is the cover with the access hole for adjustment of C7.

2. Connect the RF power meter and 50 ohm load to the 535 MHz output (J2) and reconnect J1 and P1 to their appropriate locations within the receiver. Orient the subassembly to provide access to the VCO subassembly.

3. Connect an end of a length of insulated hook-up wire at terminal E2 of the A4A6A2 VCO circuit board and connect the other end to the DVM.

4. Adjust capacitor C7 for a DVM indication of +7.0 ±2 Vdc.

5. While observing the indication on the power meter, adjust the coil winding of L2, L4, L6 and L7 to obtain an output power of -5 ±2 dBm.

Courtesy of http://BlackRadios.terryo.org

6. Place the cover on the subassembly, taking care not to short the hook-up wire installed in step 3. Retune C7 to obtain a 7.0 ±.2 Vdc tuning voltage with a -5 ±2 dBm output power.

7. Remove the hook-up wire from terminal E2 and reinstall the cover on to the 535 MHz Generator.

8. Remove the power meter and connect the spectrum analyzer at J2.

9. Select the 300 Hz bandwidth on the spectrum analyzer and observe the phase noise at 10 kHz away from the 535 MHz signal. Typically the phase noise should be -70 dBc, which when normalized to a 1 Hz bandwidth indicates -94 dBc phase noise. Power line sidebands should be down greater than 50 dBc.

10. Remove the test equipment and reinstall the 535 MHz Generator into the receiver.

4.7.2.4 **4.4-5.4 MHz Synthesizer (A4A4) Alignment**

1. Remove the 4.4-5.4 MHz Synthesizer (A4A4) from the receiver main chassis and remove the cover to expose the 352-432 MHz VCO and Divide-by-80 subassemblies. (This is the cover with the access hole labeled A1C7.)

2. Connect the frequency counter at the 4.4-5.4 MHz output (J1) and reconnect P1 and P2 to their appropriate connectors on the synthesizer motherboard.

3. Orient the subassembly to permit access to the 352-432 MHz VCO and Divide-by-80 subassembly (A4A4A1).

4. Tune the receiver RF frequency to 20.0000 MHz. Observe that the frequency counter indicates an output frequency of 4.4000 MHz.

5. Connect the DVM at terminal E1 of the A4A4A1 subassembly and adjust the turns of L1 for a reading of -7.5 ±.3 Vdc. Remove the DVM.

NOTE

L1 is coated with Q-dope at the factory. This coating must be dissolved with Q-dope thinner before adjustment can be made.

6. Connect the spectrum analyzer at the junction of R9 and C8 on the A4A4A1 subassembly and the adjacent ground plane. Adjust the analyzer to observe the 352.000 MHz VCO output and select the 300 Hz bandwidth on the analyzer. Set the analyzer sweep

Courtesy of http://BlackRadios.terryo.org

to display the sidebands 24 kHz away from the 352 MHz carrier. If the carrier contains FM components, tune C7 to stabilize the carrier across the tuning range.

7. Observe the response 8 kHz from the 352 MHz carrier and adjust L6, on the Divider and Phase Comparator (A4A4A3) to null the 8 kHz sideband (adjust L6 through the access hole labeled A3L6 on the opposite side of the subassembly). The 8 kHz sideband null must be -52 dBc or greater.

8. Tune the receiver from 20.0000 to 20.9999 MHz while observing the spectrum analyzer response. Retune the analyzer as required to keep the response displayed on the CRT. Throughout the frequency range, the 8 kHz null must be greater than -52 dBc and the 16 and 24 kHz sidebands should be greater than -40 dBc. Retune L6 as required to obtain the best overall null of the 8 kHz sideband. (Sideband levels above -40 dBc at 16 and 24 kHz away usually indicate a defective phase detector, U12, on the Divider and Phase Comparator, A4A4A3.)

9. Remove the spectrum analyzer from the junction of R9 and C8 and reinstall the subassembly cover.

10. Tune the receiver from 20.0000 to 20.9999 MHz, while observing the frequency counter indication. Observe that the synthesizer locks at each frequency change and that the frequency ranges from 4.4000 to 5.3999 MHz.

11. Disconnect the test equipment and reinstall the 4.4-5.4 MHz synthesizer into the receiver.

4.7.2.5 **Translation Oscillator (A4A3) Alignment**

1. Remove the Translation Oscillator (A4A3) from the receiver and remove the top cover.

2. Connect the power meter and 50 ohm load at the 2nd LO output connector J2 and connect the remaining Translator Oscillator connectors to their appropriate mating connections within the Synthesizer Section of the receiver. Position the module to provide access to the VCO/Buffer subassembly (A4A3A1).

3. Connect the DVM at feedthru capacitor C5 and tune the receiver to 20.5000 MHz. Adjust capacitor C7, on the VCO/Buffer subassembly, for a stable +7.0 ±.2 Vdc.

4. While observing the power meter indications, adjust the turns of coils L2, L4, L7 and L6 for the maximum output power. Typically, this output level is from +3 to +5 dBm.

Courtesy of http://BlackRadios.terryo.org

5. Slowly tune the receiver between 20.0000 and 20.9999 MHz while observing the power meter indication. Re-adjust L2, L4, L6 and L7, as required, to obtain a relatively constant output level throughout the tuning range.

6. Disconnect the DVM and power meter and install the cover onto the module.

7. Connect the frequency counter at the 2nd LO Output connector (A4A3J2). Insulate the tip of the DVM probe and insert the probe into the access hole in the cover, (adjacent to the A1C7 access hole), to monitor the tuning voltage at feedthru capacitor C5.

8. Tune the receiver to 20.5000 MHz and adjust C7 while observing the DVM indication and the frequency displayed on the counter. Adjust C7 until 530.1000 MHz is displayed on the counter.

9. Adjust C7 for a DVM indication of +7.0 to 7.5 Vdc.

10. Remove the frequency counter and connect the spectrum analyzer at J2. Set the analyzer bandwidth to 300 Hz and adjust the analyzer to observe the 2nd LO output frequency and the response at 10 kHz away.

11. Tune the receiver from 20.0000 and 20.9999 MHz while observing the response displayed on the spectrum analyzer. (Retune the analyzer as required to maintain the response on the CRT.) Observe that the phase noise at 10 kHz away from the carrier is equal to or greater than -70 dBc, throughout the 2nd LO tuning range.

12. Disconnect the analyzer and connect the frequency counter at J2.

13. Tune the receiver between 20.0000 and 20.9999 MHz while observing the frequency counter display. The frequency should lock at all frequencies throughout the 530.6000 to 529.6001 MHz range.

14. Remove the test equipment and reinstall the translation oscillator into its appropriate slot in the receiver.

4.7.2.6 **SSB BFO (A4A5) Alignment**

1. Extend the SSB BFO subassembly (A4A5) and set potentiometer R9 to the center of its range.

2. Connect the RF millivoltmeter between the 21.4 MHz BFO output (connector pin 45) and ground (connector pin 46).

Courtesy of http://BlackRadios.terryo.org

3. Select the CW detection mode on the receiver front panel.

4. Adjust C6, L4 and L5 for a maximum indication on the RF millivoltmeter.

5. Remove the RF millivoltmeter and connect the test equipment as illustrated in **Figure 4-24.**

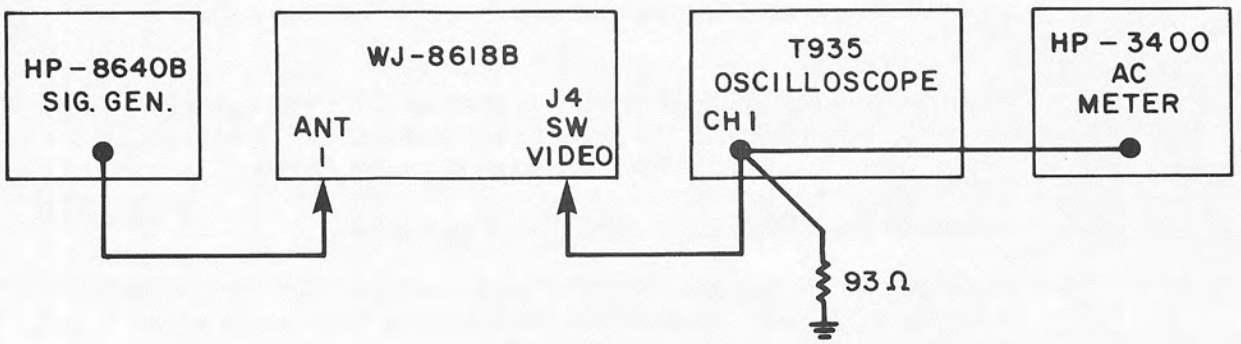

Figure 4-24. SSB BFO Alignment, Equipment Connections

6. Adjust the signal generator to produce a 450.000 MHz CW output, at a level corresponding the sensitivity of bandwidth #1, (see the table in step 6 of **paragraph 4.6.2.3**).

7. Tune the receiver as follows:

FREQ:	450.0010 MHz
ANT:	Ant 1
AGC:	ON
DETECT:	CW
BE:	#1

8. Set A4A5R9 fully CCW and slowly adjust in the CW direction while observing the Switched Video output level on the 400 EL. The level should increase at first and then begin to decrease. Continue adjusting R9 CW until AGC action reduces the video output to 0.350 V rms.

9. If the SSB Option is installed in the receiver, continue to step 10. Otherwise, remove the test equipment and reinstall the SSB BFO subassembly into slot XA5.

Courtesy of http://BlackRadios.terryo.org

10. Remove P79 from XA5. Connect the RF millivoltmeter and 50 ohm load to the 32.1 MHz output of the SSB BFO subassembly (connector pin 12) and ground (connector pin 8).

11. Select the upper or lower SSB detection mode.

12. Adjust L8 and L9 for a -10 ±2 dBm indication the RF millivoltmeter.

13. Remove the RF millivoltmeter and reinstall the SSB BFO into slot XA5.

4.7.3 DIGITAL SECTION ALIGNMENT PROCEDURES

4.7.3.1 Display Intensity Adjustment

1. Power up receiver.

2. While observing the intensity of the front panel display, adjust R1 on the Receiver Interface (A5A1) to obtain the desired intensity of the front panel LEDs and digital display.

4.7.3.2 Power Fail Adjustment

1. Extend the Microprocessor subassembly (A5A3) and connect the oscilloscope to the +5 V input at connector pin B20.

2. Set R23 to its maximum CW position.

3. Connect the receiver to the Type W5MT3W Variable Autotransformer and adjust the output to correspond to the selected voltage printed on the voltage selector pc wafer (FL1).

4. Apply power to the receiver.

5. Set the oscilloscope to AC coupling and adjust the gain until noise on the +5 Vdc supply is just visible.

6. Slowly decrease the autotransformer output until voltage spikes begin to appear.

7. Slowly adjust R23 while observing the front panel display. Continue to adjust R23 until the display LEDs extinguish.

8. Increase the autotransformer output to the proper level. The front panel should again illuminate.

9. Disconnect the oscilloscope and reinstall the Microprocessor into the XA3 slot.

Courtesy of http://BlackRadios.terryo.org

Courtesy of http://BlackRadios.terryo.org

SECTION V

REPLACEMENT PARTS LIST

Courtesy of http://BlackRadios.terryo.org

Courtesy of http://BlackRadios.terryo.org

SECTION V

REPLACEMENT PARTS LIST

5.1 UNIT NUMBERING METHOD

The unit numbering method of assigning reference designations (electrical symbol numbers) has been used to identify assemblies, subassemblies (and modules) and parts. An example of the unit numbering method follows:

Subassembly Designation A1	R1 Class and No. of Item
Identify from right to left as:	First (1) resistor (R) of First (1) subassembly (A)

As shown on the main chassis schematic, components which are an integral part of the main chassis have no subassembly designation.

5.2 REFERENCE DESIGNATION PREFIX

Partial reference designations have been used on the equipment and on the illustrations in this manual. The partial reference designations consist of the class letter(s) and identifying item number. The complete reference designations may be obtained by placing the proper prefix before the partial reference designations. Reference Designation Prefixes are provided on drawings and illustrations in parentheses within the figure titles.

5.3 LIST OF MANUFACTURERS

Mfr. Code	Name and Address	Mfr. Code	Name and Address
	Eby Sales Company, Inc. 148-05 Archer Avenue Jamaica, NY 11435	02114	Ferroxcube Corporation P.O. Box 359 Mt. Marion Road Saugerties, NY 12477
00779	AMP, Incorporated P.O. Box 3608 Harrisburg, PA 17105	02735	RCA Corporation Solid State Division Route 202 Somerville, NJ 08876
01121	Allen-Bradley Company 1201 South 2nd Street Milwaukee, WI 53204	04013	Taurus Corporation 1 Academy Hill Lambertville, NJ 08530
01295	Texas Instruments, Inc. Semiconductor-Components Div. 13500 North Central Expressway Dallas, TX 75231	04213	Caddell-Burns Mfg. Co., Inc. 40 E. Second Street Mineola, NY 11501

Courtesy of http://BlackRadios.terryo.org

Mfr. Code	Name and Address
04239	General Electric Company Chem. & Metallurgical Ventures Opn. Magnetic Mtls. Produce Sec. P.O. Box 72 Edmore, MI 49928
04713	Motorola, Incorporated Semiconductor Products Division 5005 East McDowell Road Phoenix, AZ 80058
05245	Components Corporation 2857 N. Halsted Street Chicago, IL 60657
05397	Union Carbide Corporation Materials Systems Divisions 11901 Madison Avenue Cleveland, OH 44101
07263	Fairchild Camera & Instr., Corp. Semiconductor Division 464 Ellis Street Mountain View, CA 94040
09353	C & K Components, Incorporated 103 Morse Street Watertown, MA 02172
13103	Thermalloy Company 2021 W. Valley View Lane Dallas, TX 75234
14482	Watkins-Johnson Company 3333 Hillview Avenue Palo Alto, CA 94304
14632	Watkins-Johnson Company 700 Quince Orchard Road Gaithersburg, MD 20878
15454	Rodan Industries, Incorporated 2905 Blue Star Street Anaheim, CA 92806
15542	Mini-Circuits Laboratory Div. of Scientific Comp. Corp. 2913 Quentin Road Brooklyn, NY 11229
15818	Teledyne Semiconductor 1300 Terra Bella Avenue Mountain View, CA 94040
16428	Belden Corporation P.O. Box 1101 Richmond, IN 47374
17856	Siliconix, Incorporated 2201 Laurelwood Road Santa Clara, CA 95050
18324	Signetics Corporation 811 East Arquest Avenue Sunnyvale, CA 94086
19505	Applied Engineering Prod. Co. Division of Samarius, Inc. 300 Seymour Avenue Derby, CT 06418
20183	General Atronics Corporation 1200 East Mermaid Lane Philadelphia, PA 19118
25088	Siemens America, Incorporated 186 Wood Avenue S. Iselin, NJ 08830
25120	Piezo Technology, Inc. P.O. Box 7877 2400 Diversified Way Orlando, FL 32804
26629	Frequency Sources, Incorporated P.O. Box 159 North Chelmsford, MA 01863

Courtesy of http://BlackRadios.terryo.org

Mfr. Code	Name and Address
26654	Varadyne Industries, Incorporated 2110 Broadway Santa Monica, CA 94040
26805	American Microwave Ind., Inc. 87 Rumford Avenue Waltham, MA 02154
27014	National Semi-Conductor Corp. 2950 San Ysidro Way Santa Clara, CA 95051
27802	Vectron Labs., Incorporated 121 Water Street Norwalk, CT 06854
27956	Relcom 3333 Hillview Avenue Palo Alto, CA 94304
28480	Hewlett-Packard Company Corporation Headquarters 1501 Page Mill Road Palo Alto, CA 94304
28733	Ceramic Magnetics, Inc. 87 Fairfield Road Fairfield, NJ 07006
29990	American Technical Ceramics Division of Phase Industries 1 Norden Lane Huntington Station, NY 11746
31433	Union Carbide Corporation Highway 276, S.E. Greenville, SC 29606
31918	IEE/Schadow, Inc. 8081 Wallace Road Eden Prairie, MN 55343
32293	Intersil, Inc. 10900 North Tantau Avenue Cupertine, CA 95014
33095	Spectrum Control, Incorporated 152 E. Main Street Fairview, PA 16415
34371	Harris Semiconductor Division Harris-Intertype Corporation P.O. Box 883 Melbourne, FL 32901
50088	Mostek Corporation 1400 Upfield Drive Carrollton, TX 75006
50101	GHZ Devices, Inc. Kennedy Drive North Chelmsford, MA 01863
52648	Plessey Memories, Inc. DBA Plessey Semiconductors 1674 McGaw Avenue Irvine, CA 92714
55153	Dielectric Laboratories, Inc. 69 Albany Street Cazenovia, NY 13035
56289	Sprague Electric Co. Marshall Street North Adams, MA 01247
71279	Cambridge Thermionic Corp. 445 Concord Avenue Cambridge, MA 02138
71400	Bussman Manufacturing Division of McGraw-Edison Co. 2536 W. University Street St. Louis, MO 63107

Courtesy of http://BlackRadios.terryo.org

Mfr. Code	Name and Address
	TRW Electronic Components Cinch Connector Operations 1501 Morse Avenue Elk Grove Village, IL 60007
72136	Electro Motive Mfg. Co., Inc. South Park & John Streets Willimantic, CT 06226
72259	Nytronics, Incorporated 10 Pelham Parkway Pelham Manor, NY 10803
72982	Erie Tech. Products, Inc. 644 West 12th Street Erie, PA 16512
73138	Beckman Instr., Inc. Helipot Division 2500 Harbor Blvd. Fullerton, CA 92634
73445	Amperex Electronic Corporation 230 Duffy Avenue Hicksville, LI, NY 11802
73899	JFD Electronics Company 15th at 62nd Street Brooklyn, NY 11219
75915	Littlefuse, Incorporated 800 E. Northwest Highway Des Plaines, IL 60016
76055	Mallory Controls Division P.R. Mallory and Co., Inc. P.O. Box 327 State Road 28 W. Frankfort, IN 46041
80031	Electra-Midland Corporation MEPCO Division 22 Columbia Road Morristown, NJ 07960
80058	Joint Electronic Type Designation System
80103	Lambda Electronics Corporation Div. of Veeco Instruments, Inc. 515 Broad Hollow Road Melville, NY 11746
80131	Electronic Industries Assoc. 2001 Eye Street, N.W. Washington, D.C. 20006
80294	Bourns, Incorporated Instrument Division 6135 Magnolia Avenue Riverside, CA 92506
81073	Grayhill, Incorporated 561 Hillgrove Avenue LaGrange, IL 60525
81349	Military Specifications
81350	Joint Army-Navy Specifications
82389	Switchcraft, Incorporated 5555 North Elston Avenue Chicago, IL 60630
91293	Johanson Mfg. Company P.O. Box 329 Boonton, NJ 07005
91418	Radio Materials Company 4242 West Bryn Mawr Avenue Chicago, IL 60646

Courtesy of http://BlackRadios.terryo.org

Mfr. Code	Name and Address	Mfr. Code	Name and Address
91984	Maida Development Company 214 Academy Street Hampton, VA 23369	98291	Sealectro Corporation 225 Hoyt Mamaroneck, NY 10544
93958	Republic Electronics Corporation 176 East 7th Street Paterson, NJ 07524	98978	Intl. Elec. Research Corporation 135 West Magnolia Boulevard Burbank, CA 91502
95121	Quality Components, Inc. P.O. Box 113 St. Mary's, PA 15857	99800	American Precision Industries Delevan Electronics Division 270 Quaker Road East Aurora, NY 14052

5.4 PARTS LIST

The parts list which follows contains all electrical parts used in the equipment and certain mechanical parts which are subject to unusual wear or damage. When ordering replacement parts from the Watkins-Johnson Company, specify the type and serial number of the equipment and the reference designation and description of each part ordered. The list of manufacturers provided in **paragraph 5.3** and the manufacturer's part number for components are included as a guide to the user of the equipment in the field. These parts may not necessarily agree with the parts installed in the equipment; however, the parts specified in this list will provide satisfactory operation of the equipment. Replacement parts may be obtained from any manufacturer as long as the physical and electrical parameters of the part selected agree with the original indicated part. In the case of components defined by a military or industrial specification, a vendor which can provide the necessary component is suggested as a convenience to the user.

NOTE

As improved semiconductors become available, it is the policy of Watkins-Johnson to incorporate them in proprietary products. For this reason some transistors, diodes and integrated circuits installed in the equipment may not agree with those specified in the parts lists and schematic diagrams of this manual. However, the semiconductors designated in the manual may be substituted in every case with satisfactory results.

Courtesy of http://BlackRadios.terryo.org

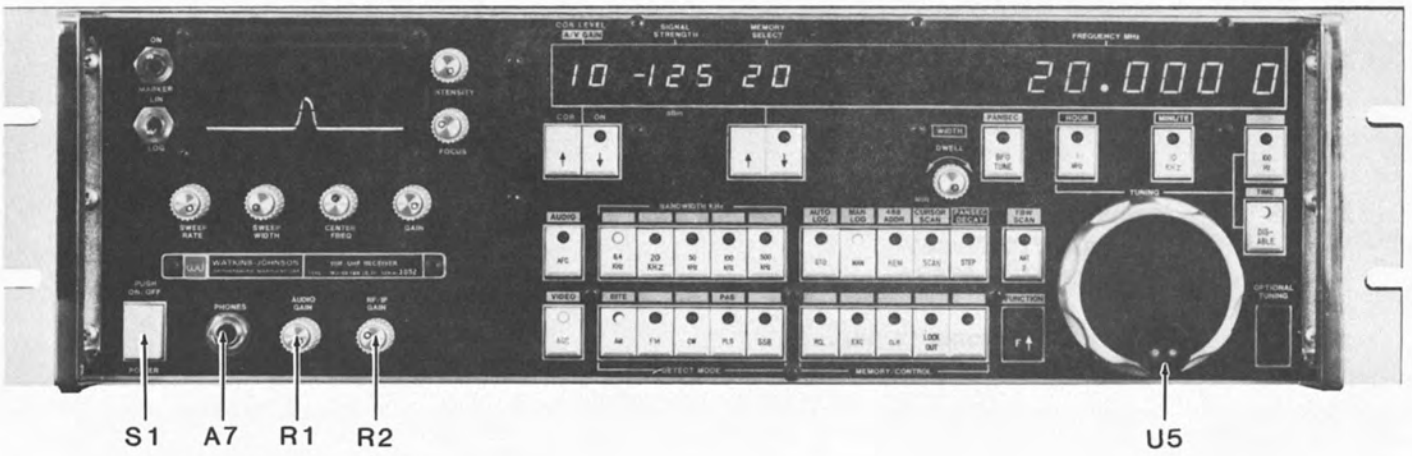

Figure 5-1. WJ-8618B(S1) Receiver, Front View, Location of Components

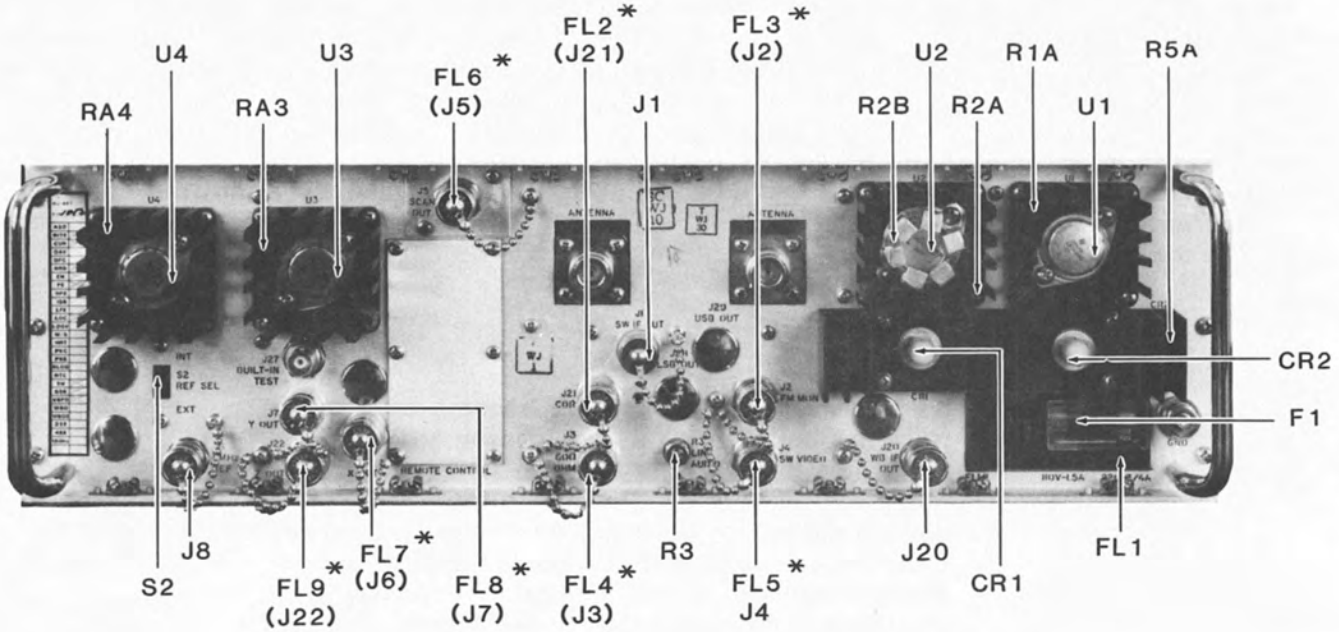

Figure 5-2. WJ-8618B(S1) Receiver, Rear View, Location of Components

Courtesy of http://BlackRadios.terryo.org

5.5 Type WJ-8618B(S1), VHF/UHF RECEIVER MAIN CHASSIS

REF DESIG	DESCRIPTION	QTY PER ASSY	MANUFACTURER'S PART NO.	MFR. CODE	RECM VENDOR
A1	Power Distribution	1	764005-1	14632	
A2	Signal Monitor	1	861XB/SM	14632	
A3	RF/IF Motherboard	1	794189-2	14632	
A4	Synthesizer Motherboard	1	798071-1	14632	
A5	Digital Motherboard	1	798039-7	14632	
A6	Front Panel Display and Control	1	794190-2	14632	
A7	Phone Jack	1	794141-1	14632	
A8	Antenna Switch	1	794128-1	14632	
A9	Wideband IF Output Amplifier (Optional)	1	861XB/WBO	14632	
AI-1	Extender Board	2	796198-1	14632	
AI-2	Extender Board	1	794140-1	14632	
AI-3	Extender Board	1	798076-1	14632	
AI-4	Handle, PC Board Extender	1	15689-1	14632	
AI-5	Alignment Tool	1	5284	73899	
AI-6	Same as AI-1				
AI-7	Extender Cable Assembly	1	380259-16	14632	
BT-1	Battery	1	180090-1	14632	
C1	Capacitor, Elctrolytic, Tantalum: 27 µF, 10%, 35 V	2	196D276X9035TE4	56289	
C2	Same as C1				
C3	Capacitor, Electrolytic, Tantalum: 2.2 µF, 10%, 35 V	1	CS13BF225K	81349	
C4	Capacitor, Electrolytic, Tantalum: 1 µF, 20%, 35 V	3	196D105X0035HE4	56289	
C5	Capacitor, Ceramic, Feedthru: 0.05 µF, 20%, 300 V	15	54-785-005-503P	33095	
C6 Thru C13	Same as C5				
C14	Same as C4				
C15	Capacitor, Ceramic, Disc: 0.1 µF, 20%, 50 V	2	34475-1	14632	
C16 Thru C18	Same as C5				
C19	Capacitor, Ceramic, Disc: 0.47 µF, 20%, 100 V	1	8131M100-651-474M	59660	
C20	Same as C15				
C21	Same as C5				
C22	Capacitor, Ceramic, Feedthru: 5000 pF, 200 V	5	2425-018X5W0-502AA	59660	
C23 Thru C26	Same as C22				
C27	Capacitor, Electrolytic, Aluminum: 17000 µF, 40 V	1	CGS173U040VAC	90201	
C28	Capacitor, Electrolytic, Tantalum: 200 µF, 20%, 15 V	3	MTP207M015P1C	76055	
C29	Same as C28				
C30	Same as C28				
C31	Same as C4				
C32	Capacitor, Ceramic, Disc: .047 µF, 10%, 100 V	2	CK06BX473	81349	

Courtesy of http://BlackRadios.terryo.org

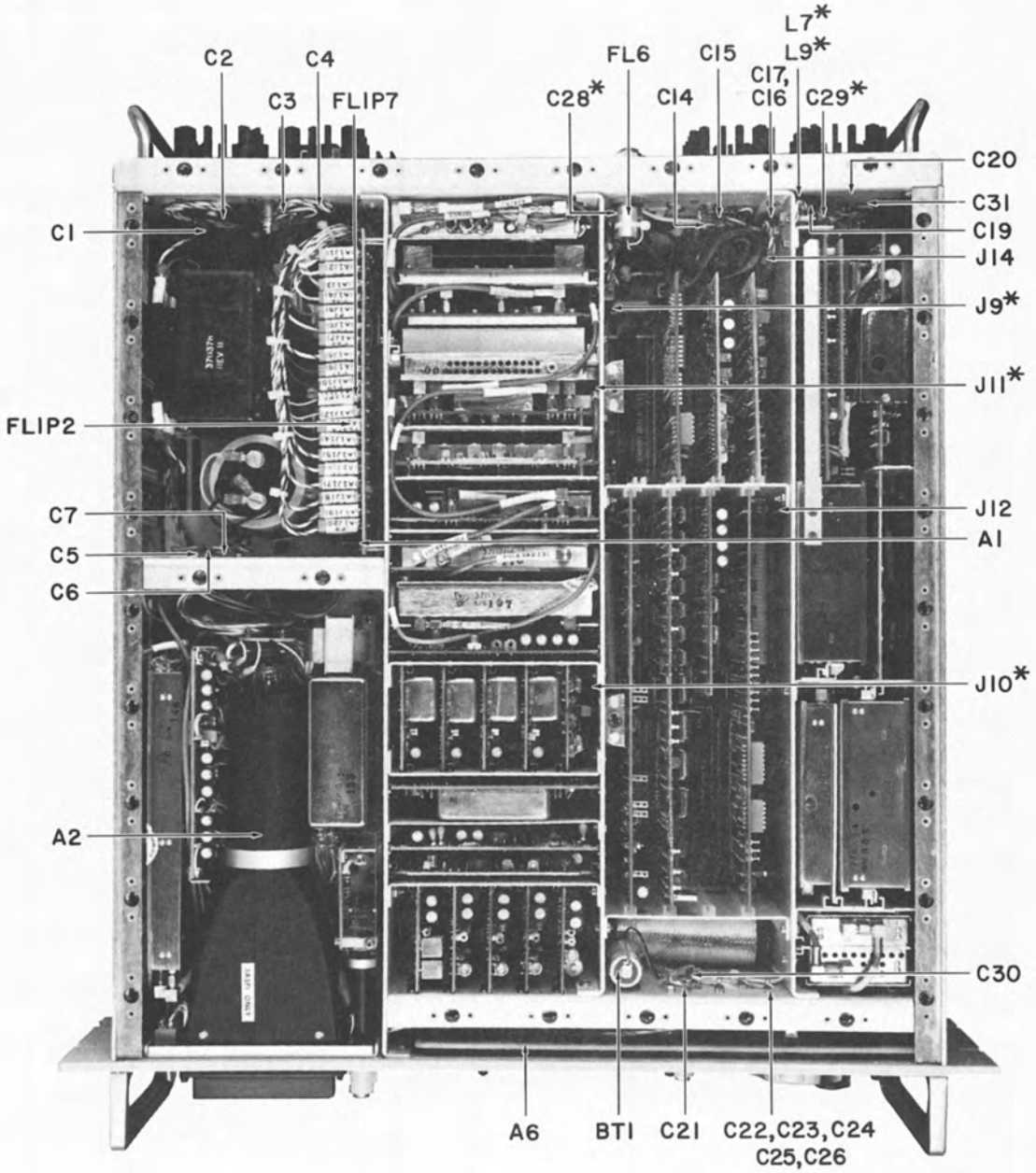

Figure 5-3. WJ-8618B(S1) Receiver, Top View, Location of Components

Courtesy of http://BlackRadios.terryo.org

MAIN CHASSIS

REF DESIG	DESCRIPTION	QTY PER ASSY	MANUFACTURER'S PART NO.	MFR. CODE	RECM VENDOR
C33	Same as C32				
C34	Same as C5				
C35	Same as C5				
CP1	Adaptor, Connector	1	5813-1501-000	19505	
CR1	Diode	2	1N1614	80131	
CR2	Same as CR1				
F1	Fuse	1	MLX1.5	71400	
F2	Fuse	1	MDL-3/4	71400	
FL1	Filter	1	370436-1	14632	
FL2	Filter	6	1240-030-0000	72982	
FL3	Filter	2	52-706-301	33095	
FL4	Same as FL2				
FL5	Same as FL3				
FL7 Thru FL9	Same as FL2				
FL1P1	Plug Assembly	1	370433-1	14632	
FL1P2	Plug Assembly	1	370429-1	14632	
FL1P3	Plug Assembly	1	370433-2	14632	
FL1P4	Plug Assembly	1	370433-3	14632	
FL1P5	Plug Assembly	1	370433-4	14632	
FL1P6	Plug Assembly	1	370433-5	14632	
FL1P7	Plug Assembly	1	370429-2	14632	
J1	Connector, Jack	1	4116-0001	95077	
J2	Part of FL3				
J3	Part of FL4				
J4	Part of FL5				
J5	Part of FL6				
J6	Part of FL7				
J7	Part of FL8				
J8	Connector, Receptacle	2	1-225398-5	00779	
J9	Connector, Jack	2	1006-7541-010	19505	
J10	Same as J16				
J11	Same as J9				
J12	Same as J14				
J13	Same as J16				
J14	Connector, Jack	4	1003-7541-010	19505	
J15	Same as J16				
J16	Connector, Plug	7	50-330-0039-91	98291	
J17	Not Used				
J18	Same as J16				
J19	Connector, Receptacle	1	370441-1	14632	
J20	Same as J8				

Courtesy of http://BlackRadios.terryo.org

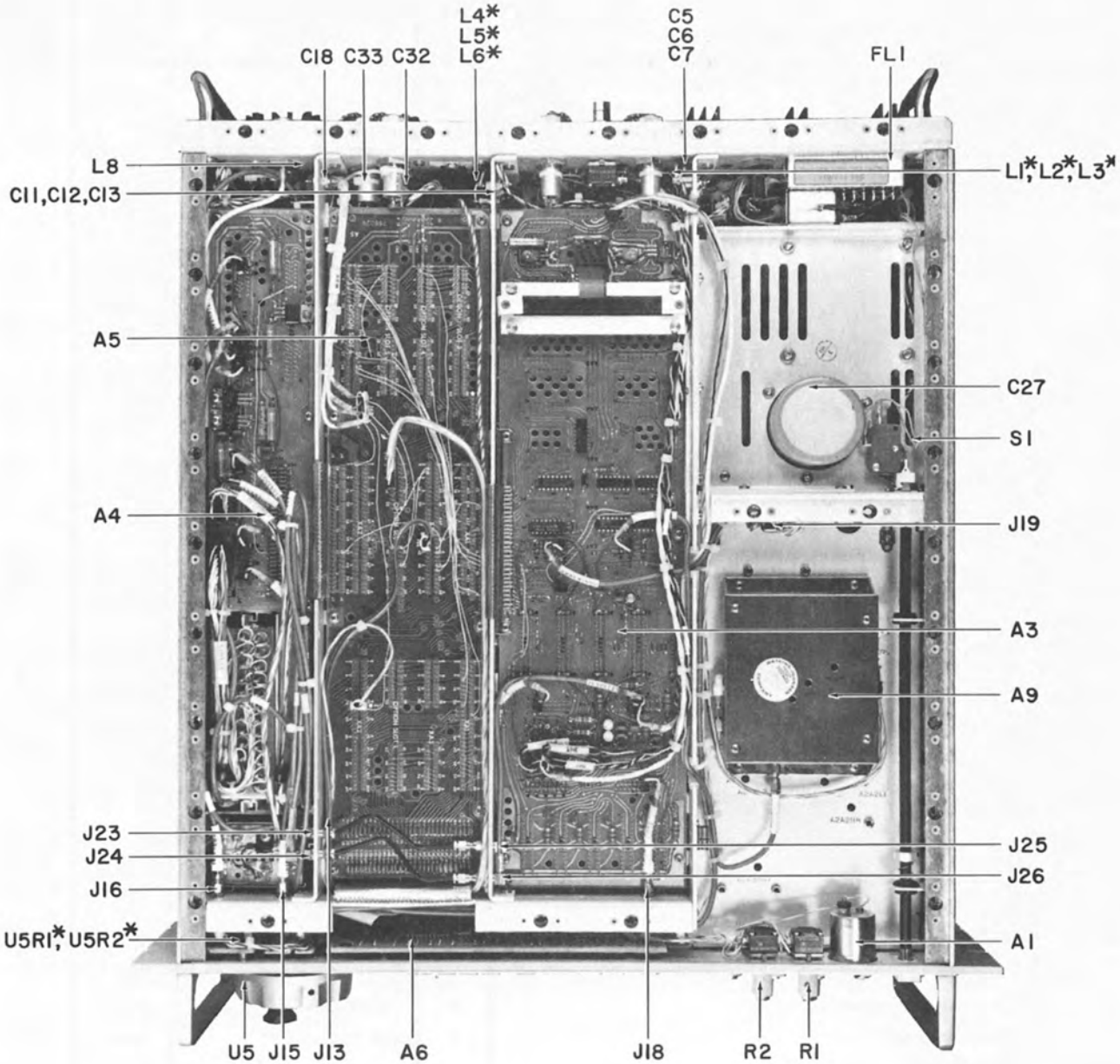

Figure 5-4. WJ-8618B(S1) Receiver, Bottom View, Location of Components

Courtesy of http://BlackRadios.terryo.org

MAIN CHASSIS

REF DESIG	DESCRIPTION	QTY PER ASSY	MANUFACTURER'S PART NO.	MFR. CODE	RECM VENDOR
J21	Part of FL2				
J22	Part of FL9				
J23	Same as J14				
J24	Same as J14				
J25	Same as J16				
J26	Same as J16				
L1	Ferrite Choke	7	VK200-10/3B	02114	
L2 Thru L7	Same as L1				
L8	Coil	2	20681-129	14632	
L9	Same as L8				
P1	Part of W1				
P2	Part of W1				
P3	Connector, Plug	4	42236-1	00779	
P4	Connector, Plug	4	2-350804-2	00779	
P5	Same as P3				
P6	Same as P4				
P7	Same as P3				
P8	Same as P4				
P9	Plug Assembly	1	370429-9	14632	
P10	Same as P4				
P11	Plug Assembly	1	370429-3	14632	
P12	Plug Assembly	1	370429-4	14632	
P13	Plug Assembly	1	370429-5	14632	
P14	Plug Assembly	1	370429-6	14632	
P15	Plug Assembly	1	370429-7	14632	
P16	Plug Assembly	1	370429-8	14632	
P17	Same as P3				
P18	Plug Assembly	1	370433-6	14632	
P19	Plug Assembly	1	370433-7	14632	
P20	Connector, Plug	11	50-024-3875-91	98291	
P21	Not Used				
P22	Connector, Plug	5	50-328-3875-91	98291	
P23 Thru P25	Same as P20				
P26	Same as P22				
P27	Connector, Plug	17	87499-5	00779	
P28	Same as P27				
P29	Same as P27				
P30	Plug Assembly	1	370429-10	14632	
P31	Plug Assembly	1	370429-11	14632	

Courtesy of http://BlackRadios.terryo.org

MAIN CHASSIS

REF DESIG	DESCRIPTION	QTY PER ASSY	MANUFACTURER'S PART NO.	MFR. CODE	RECM VENDOR
P32	Plug Assembly	1	370429-12	14632	
P33	Plug Assembly	1	270695-2	14632	
P34	Plug Assembly	1	370429-14	14632	
P35	Plug Assembly	1	281355-1	14632	
P36	Same as P27				
P37	Plug Assembly	1	370427-1	14632	
P38	Plug Assembly	1	370431-1	14632	
P39	Plug Assembly	1	370427-2	14632	
P40	Plug Assembly	1	370427-3	14632	
P41	Plug Assembly	1	370430-1	14632	
P42	Plug Assembly	1	370430-2	14632	
P43	Plug Assembly	1	370430-3	14632	
P44 Thru P49	Same as P27				
P50	Connector, Plug: SMC	4	1002-7541-010	19505	
P51	Same as P27				
P52	Same as P20				
P53	Same as P22				
P54	Same as P20				
P55	Same as P20				
P56	Connector, Plug	1	UG1465/U	80058	
P57 Thru P59	Same as P20				
P60	Same as P50				
P61	Not Used				
P62	Not Used				
P63	Connector Plug	1	1-87499-1	00779	
P64	Plug Assembly	1	270695-1	14632	
P65	Not Used				
P66	Plug Assembly	1	370434-1	14632	
P67	Plug Assembly	1	370434-3	14632	
P68	Plug Assembly	1	370434-2	14632	
P69	Same as P20				
P70	Same as P27				
P71	Same as P20				
P72	Same as P50				
P73	Same as P50				
P74	Same as P27				
P75	Same as P27				
P76	Same as P22				
P77	Same as P27				

Courtesy of http://BlackRadios.terryo.org

MAIN CHASSIS

REF DESIG	DESCRIPTION	QTY PER ASSY	MANUFACTURER'S PART NO.	MFR. CODE	RECM VENDOR
P78	Same as P22				
P79	Same as P27				
R1	Resistor, Variable, Composition: 10 kΩ, 10%, 1 W	1	70A3N048L103A	01121	
R2	Resistor, Variable, Composition: 10 kΩ, 10%, 1 W	1	70A3N048L103U	01121	
R3	Resistor, Variable, Composition: 10 kΩ, 10%, 1 W	1	70A3L036L103U	01121	
R4	Resistor, Fixed, Film: 1.0 kΩ, 5%, 1/8 W	1	CF1/8-1.0K/J	09021	
R5	Resistor, Fixed, Film: 27 kΩ, 5%, 1/8 W	1	CF1/8-27K/J	09021	
RA1	Heatsink	4	5680-0150-3	30161	
RA2A	Same as RA1				
RA2B	Heatsink	1	5791C	30161	
RA3	Same as RA1				
RA4	Same as RA1				
RA5	Heatsink	1	390394-1	14632	
S1	Switch, Pushbutton	1	SCD18542	14632	
S2	Switch, Slide	1	11A1211	82389	
T1	Transformer	1	370378-1	14632	
U1	Voltage Regulator	1	LM340AKC15	27014	
U2	Voltage Regulator	1	LM120K15	27014	
U3	Voltage Regulator	2	LT1003CK	4W715	
U4	Same as U3				
U5	Encoder Assembly	1	290378-1	14632	
U5R1	Resistor, Fixed, Film: 10 kΩ, 5%, 1/4 W	2	CF1/8-10K/J	09021	
U5R2	Same as U5R1				
W1	Cord/Line	1	17250	16428	
W2	Cable Assembly	1	370428-1	14632	
W3	Cable Assembly	1	370428-2	14632	
W4	Cable Assembly	1	370428-3	14632	
W5	Cable Assembly	1	370428-4	14632	
W6	Cable Assembly	1	380260-4	14632	
W7	Cable Assembly	1	380259-8	14632	
W8	Cable Assembly	1	380259-9	14632	
W9	Cable Assembly	1	280225-1	14632	
W10	Cable Assembly	1	280226-1	14632	
W11	Cable Assembly	1	280227-1	14632	
W12	Cable Assembly	1	380260-1	14632	
W13	Cable Assembly	1	380260-2	14632	
W14	Cable Assembly	1	380260-3	14632	
W15	Not Used				
W16	Cable Assembly	1	380260-5	14632	
W17	Cable Assembly	1	380260-6	14632	
W18	Cable Assembly	1	380261-1	14632	
W19	Cable Assembly	1	380261-2	14632	

Courtesy of http://BlackRadios.terryo.org

MAIN CHASSIS

REF DESIG	DESCRIPTION	QTY PER ASSY	MANUFACTURER'S PART NO.	MFR. CODE	RECM VENDOR
W20	Cable Assembly	1	380261-3	14632	
W21	Cable Assembly	1	380260-7	14632	
W22	Cable Assembly	1	380262-1	14632	
W23	Cable Assembly	1	380259-10	14632	
W24	Cable Assembly	1	380259-11	14632	
W25	Cable Assembly	1	380259-12	14632	
W26	Cable Assembly	1	380259-13	14632	
W27	Cable Assembly	1	380259-14	14632	
W28	Not Used				
W29	Cable Assembly	1	380363-1	14632	
W30	Cable Assembly	1	380260-9	14632	
W31	Cable Assembly	1	380259-15	14632	
W32	Cable Assembly	1	280228-1	14632	
W33	Cable Assembly	1	280229-1	14632	
W34	Cable Assembly	1	380260-10	14632	
W35	Cable Assembly	1	380260-11	14632	
W36	Cable Assembly	1	380260-12	14632	
W37	Cable Assembly	1	380260-13	14632	

Courtesy of http://BlackRadios.terryo.org

5.5.1 TYPE 764005-1 POWER DISTRIBUTION

REF DESIG PREFIX **A1**

REF DESIG	DESCRIPTION	QTY PER ASSY	MANUFACTURER'S PART NO.	MFR. CODE	RECM VENDOR
C1	Capacitor, Electrolytic, Aluminum: 2200 µF, -10%, +75%, 25 V	2	39D228G025HP4	56289	
C2	Same as C1				
C3	Capacitor, Electrolytic, Aluminum: 8000 µF, -10%, +75%, 15 V	3	39D808G015JT4	56289	
C4	Same as C3				
C5	Same as C3				
CR1	Diode	4	1N4998	80131	
CR2 Thru CR4	Same as CR1				
J1	Connector, Receptacle	19	62073-1	00779	
J2 Thru J7	Same as J1				
J8	Not Used				
J9 Thru J20	Same as J1				

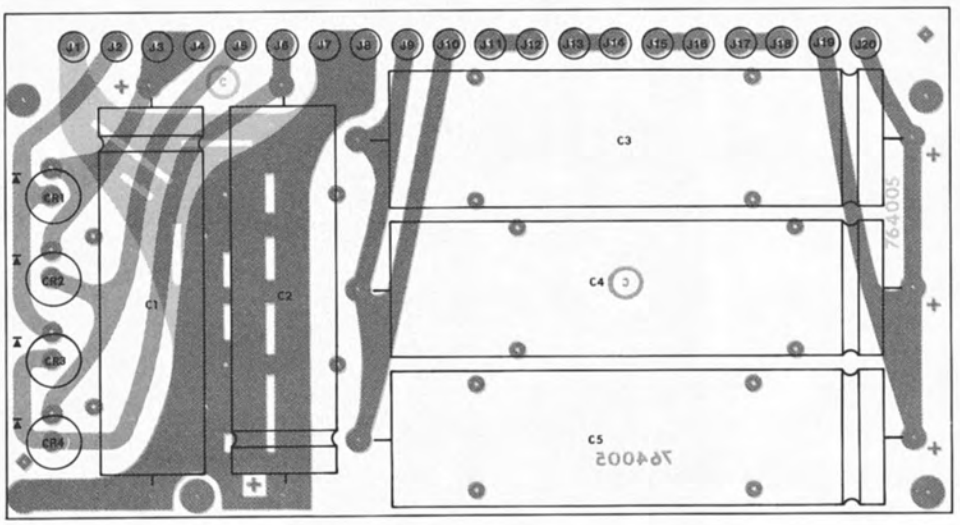

Figure 5-5. Type 764005-1 Power Distribution (A1), Location of Components

Courtesy of http://BlackRadios.terryo.org

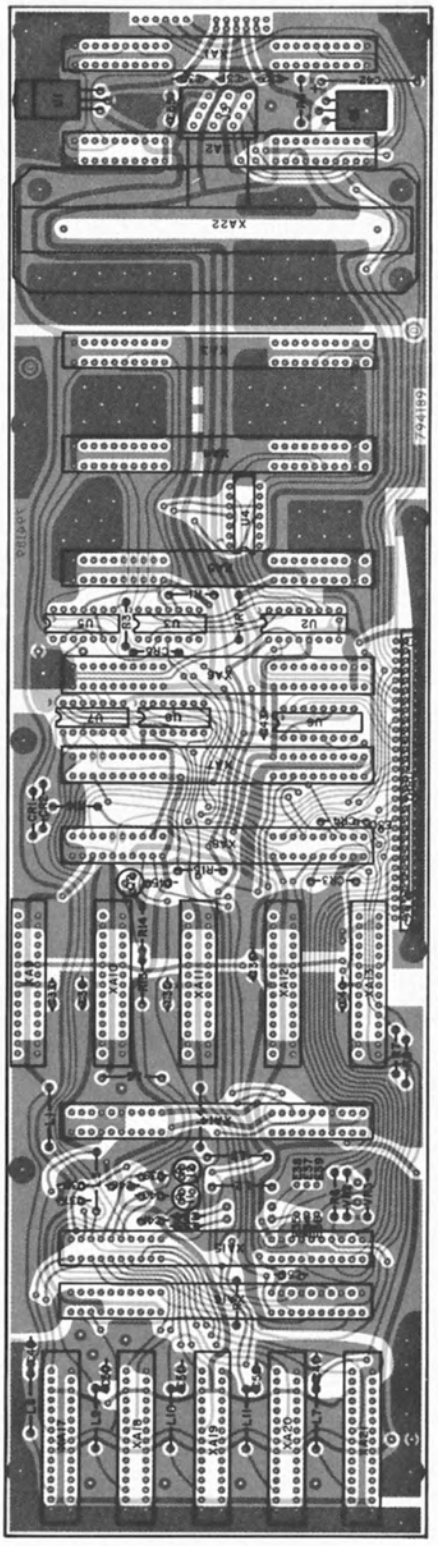

Figure 5-6. Type 794189 RF/IF Motherboard (A3), Location of Components

Courtesy of http://BlackRadios.terryo.org

5.5.2 TYPE 794189-2 RF/IF MOTHERBOARD

REF DESIG PREFIX **A3**

REF DESIG	DESCRIPTION	QTY PER ASSY	MANUFACTURER'S PART NO.	MFR. CODE	RECM VENDOR
A1	UHF Preselector (Optional)	1	796414-1	14632	
A2	UHF Preamplifier/Mixer (Optional)	1	796415-1	14632	
A3	High Band Preselector	1	794094-1	14632	
A4	Low Band Preselector	1	794095-1	14632	
A5	VHF Preamplifier	1	794097-2	14632	
A6	1st Converter	1	796493-1	14632	
A7	2nd Converter	1	716003-3	14632	
A8	AGC Assembly	1	784002-1	14632	
A9*	IF Amplifier No. 1	1	Selectable	14632	
A10*	IF Amplifier No. 2	1	Selectable	14632	
A11*	IF Amplifier No. 3	1	Selectable	14632	
A12*	IF Amplifier No. 4	1	Selectable	14632	
A13*	IF Amplifier No. 5	1	Selectable	14632	
A14	SSB Bypass (Optional)	1	798074-1	14632	
A15	Video/Audio/COR	1	796233-1	14632	
A16	IF Output/AM Demodulator	1	724016-1	14632	
A17*	FM Demodulator No. 1	1	Selectable	14632	
A18*	FM Demodulator No. 2	1	Selectable	14632	
A19*	FM Demodulator No. 3	1	Selectable	14632	
A20*	FM Demodulator No. 4	1	Selectable	14632	
A21*	FM Demodulator No. 5	1	Selectable	14632	
C1	Capacitor, Ceramic, Disc: 4700 pF, 20%, 50 V	28	8121-050-651-472M	59660	
C2 Thru C4	Same as C1				
C5	Not Used				
C6 Thru C29	Same as C1				
C30	Capacitor, Electrolytic, Tantalum: 18 µF, 10%, 20 V	1	196D186X9020KE3	56289	
C31	Capacitor, Ceramic, Disc: .01 µF, 20%, 50 V	19	34453-1	14632	
C32 Thru C41	Same as C31				
C42	Capacitor, Electrolytic, Tantalum: 200 µF, 20%, 15 V	1	MTP207M015P1C	76055	
C43	Capacitor, Ceramic, Disc: .1 µF, 20%, 50 V	1	34475-1	14632	
C44 Thru C47	Same as C31				
C48	Not Used				
C49 Thru C52	Same as C31				

*Selectable

Courtesy of http://BlackRadios.terryo.org

Available Bandwidths

IF Bandwith in kHz ±10%	SINGLE 21.4 MHz IF Amp Type	FM Demod Type	IF Bandwidths in kHz ±10%	DUAL Switchable IF Amp Type	Switchable FM Demod Type
1.5	724006-22	794106-10	3.2/10	726009-1	796354-1
3.2	724006-16	794106-6	3.2/6.4	726009-17	796354-10
4.0	724006-23	794106-11	6.4/10	726009-5	796354-3
6.4	724006-18	794106-3	10/20	726009-11	796354-7
10	724006-1	794106-1	10/25	726009-14	796254-8
15	724006-21	794106-8	10/30	726009-21	796354-11
20	724006-2	794106-2	15/20	726009-6	796354-4
25	724006-17	794106-7	20/30	726009-15	796354-9
30	724006-10	794106-5	20/50	726009-2	796354-2
40	724006-8	794107-5	30/40	726009-7	796354-6
40	724006-8	794106-4	30/50	726009-8	796354-5
50	724006-3	794106-9	50/75	726009-16	796355-6
60	724006-24	794107-13	50/100	796009-12	796355-5
75	724006-9	794107-6	75/100	726009-9	796355-3
100	724006-4	794107-2	100/200	726009-3	796355-1
150	724006-25	794107-14	100/300	726009-4	796355-2
250	724006-5	794107-3	150/200	726009-10	796355-4
300	724006-6	794107-4	150/300	726009-18	796355-7
500	726013-1	794104-2	200/300	726009-20	796355-8
1000	726013-2	794104-1	250/500	726009-13	796356-3
2000	726013-3	794105-1	300/500	726009-19	796356-5
4000	726013-4	794105-2	300/1000	726010-7	796356-4
8000	796337-1	794105-4	400/600	726010-1	796356-1
			500/1000	726010-2	796356-2
			1000/2000	726010-3	796357-1
			2000/4000	726010-4	796357-2
			4000/6000	726010-5	796357-3
			4000/8000	726010-6	796357-4
			4000/10000	726010-8	796357-5

Courtesy of http://BlackRadios.terryo.org

REF DESIG PREFIX **A3**

REF DESIG	DESCRIPTION	QTY PER ASSY	MANUFACTURER'S PART NO.	MFR. CODE	RECM VENDOR
C53	Capacitor, Ceramic, Disc: .47 µF, 20%, 50 V	4	34452-1	14632	
C54	Same as C53				
C55	Capacitor, Electrolytic, Tantalum: 27 µF, 10%, 35 V	1	196D276X9035TE4	56289	
C56	Same as C53				
C57	Same as C53				
C58	Capacitor, Ceramic, Disc: 1000 pF, 5%, 100 V	1	8121100-C0G0102J	59660	
CR1	Diode	4	5082-2800	28480	
CR2 Thru CR4	Same as CR1				
CR5	Diode	1	1N462A	80131	
FB1	Ferrite Bead	12	56-590-65-4A	02114	
FB2 Thru FB12	Same as FB1				
J1	Combination, Post, Feedthru: 6 positions	3	118470-8	00779	
J2	Same as J1				
J3	Same as J1				
L1	Coil, Fixed: 18 µH, 10%	11	1537-42	99800	
L2 Thru L11	Same as L1				
P1	Cable Assembly	1	34832-2	1E1-E29	
P2	Connector, Plug	10	328-3875-91	98291	
P3 Thru P11	Same as P2				
P12	Connector, Paddle	1	88213-1	00779	
Q1	Transistor	1	2N4921	80131	
Q2	Transistor	1	2N2222A	80131	
R1	Resistor, Fixed, Film: 1 kΩ, 5%, 1/4 W	5	CF1/4-1K/J	09021	
R2	Same as R1				
R3	Resistor, Fixed, Film: 150 kΩ, 5%, 1/4 W	1	CF1/4-150K/J	09021	
R4	Resistor, Fixed, Film: 470Ω, 5%, 1/4 W	1	CF1/4-470 OHMS/J	09021	
R5	Resistor, Fixed, Film: 100Ω, 5%, 1/4 W	1	CF 1/4-100 OHMS/J	09021	
R6 Thru R8	Same as R1				
R9	Resistor, Fixed, Film: 390Ω, 5%, 1/4 W	2	CF 1/4-390 OHMS/J	09021	
R10	Same as R9				
R11	Resistor, Trimmer, Film: 10 kΩ, 10%, 1/2 W	2	62PR10K	73138	
R12	Same as R11				
R13	Resistor, Fixed, Film: 15 kΩ, 5%, 1/4 W	1	CF 1/4-15K/J	09021	
R14	Resistor, Fixed, Film: 4.7 kΩ, 5%, 1/4 W	1	CF 1/4-4.7K/J	09021	

Courtesy of http://BlackRadios.terryo.org

REF DESIG PREFIX **A3**

REF DESIG	DESCRIPTION	QTY PER ASSY	MANUFACTURER'S PART NO.	MFR. CODE	RECM VENDOR
R15	Resistor, Fixed, Film: 2.2 kΩ, 5%, 1/4 W	2	CF1/4-2.2K/J	09021	
R16	Same as R15				
U1	Voltage Regulator	1	LM340AT-5.0	27014	
U2	Integrated Circuit	1	867442	14632	
U3	Integrated Circuit	3	LM324N	27014	
U4	Same as U3				
U5	Same as U3				
U6	Integrated Circuit	1	SN74LS138N	01295	
U7	Integrated Circuit	1	SN74LS32N	01295	
U8	Integrated Circuit	1	SN74LS04SN	01295	
VR1	Voltage Regulator: 5.6 V	1	1N752A	80131	
VR2	Voltage Regulator: 3.3 V	2	1N746A	80131	
VR3	Same as VR2				
W1	Cable Assembly	1	380259-1	14632	
W2	Cable Assembly	1	380259-2	14632	
W3	Cable Assembly	1	380259-3	14632	
W4	Cable Assembly	1	380259-4	14632	
W5	Cable Assembly	1	380259-5	14632	
XA1	Connector	11	MK30C-13-195-4381	81312	
XA2 Thru XA8	Same as XA1				
XA9	Connector	10	MK156-13-195	81312	
XA10 Thru XA13	Same as XA9				
XA14 Thru XA16	Same as XA1				
XA17 Thru XA21	Same as XA9				
XA22	Housing, Connector	1	88374-7	00779	

Courtesy of http://BlackRadios.terryo.org

5.5.2.1 **Type 794094-1 VHF High-Band Preselector** REF DESIG PREFIX **A3A3**

REF DESIG	DESCRIPTION	QTY PER ASSY	MANUFACTURER'S PART NO.	MFR. CODE	RECM VENDOR
C1	Capacitor, Ceramic, Disc: 0.1 µF, 20%, 50 V	6	34475-1	14632	
C2	Capacitor, Ceramic, Chip: 476 pF, 10%, 100 V	10	M17CG102K50T	28733	
C3	Same as C2				
C4	Same as C1				
C5	Same as C2				
C6	Same as C2				
C7	Capacitor, Ceramic, Tubular: 1.5 pF, ±.25 pF, 500 V	4	301-000C0K0-159C	72982	
C8	Same as C7				
C9	Not Used				
C10	Capacitor, Variable, Air: .8-10 pF, 250 V	6	5202	91293	
C11	Same as C10				
C12	Same as C10				
C13	Not Used				
C14	Same as C2				
C15	Same as C2				
C16	Same as C10				
C17	Same as C7				
C18	Same as C10				
C19	Same as C7				
C20	Same as C10				

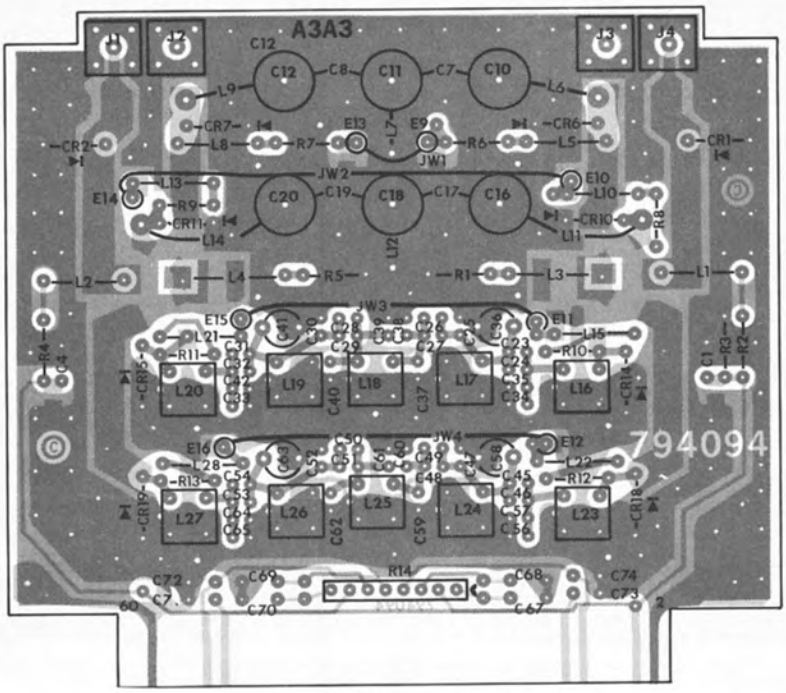

Figure 5-7. Type 794094-1 VHF High-Band Preselector (A3A3), Location of Components

Courtesy of http://BlackRadios.terryo.org

REF DESIG PREFIX **A3A3**

REF DESIG	DESCRIPTION	QTY PER ASSY	MANUFACTURER'S PART NO.	MFR. CODE	RECM VENDOR
C21	Same as C2				
C22	Same as C2				
C23	Not Used				
C24	Capacitor, Ceramic, Disc: 3.3 pF, ±.25 pF, 100 V	8	8101-100C0J0-339C	59660	
C25	Not Used				
C26	Capacitor, Ceramic, Disc: 1.5 pF, ±0.1 pF, 100 V	2	8101-100C0K0-159B	59660	
C27	Capacitor, Ceramic, Monolithic: 2.2 pF, ±0.25 pF, 100 V	8	8101-100C0J0-229C	59660	
C28	Same as C26				
C29	Same as C27				
C30	Not Used				
C31	Not Used				
C32	Same as C24				
C33	Not Used				
C34	Not Used				
C35	Same as C27				
C36	Capacitor, Variable, Ceramic: 2-5 pF, 100 V	4	518-000A2-5	59660	
C37	Capacitor, Ceramic, Disc: 2.7 pF, ±0.25 pF, 100 V	6	8101-100C0J0-279C	59660	
C38	Not Used				
C39	Not Used				
C40	Same as C37				
C41	Same as C36				
C42	Same as C27				
C43	Capacitor, Ceramic, Chip: 0.056 µF, 50 V	2	C2225C563P5XAH	05397	
C44	Same as C2				
C45	Capacitor, Ceramic, Disc: 1.8 pF, ±0.1 pF, 100 V	4	8101-100C0K0-189B	59660	
C46	Same as C24				
C47	Same as C24				
C48	Same as C37				
C49	Same as C24				
C50	Same as C37				
C51	Same as C24				
C52	Same as C24				
C53	Same as C45				
C54	Same as C24				
C55	Same as C2				
C56	Same as C45				
C57	Same as C27				
C58	Same as C36				
C59	Same as C37				
C60	Same as C27				
C61	Same as C27				
C62	Same as C37				

Courtesy of http://BlackRadios.terryo.org

REF DESIG PREFIX **A3A3**

REF DESIG	DESCRIPTION	QTY PER ASSY	MANUFACTURER'S PART NO.	MFR. CODE	RECM VENDOR
C63	Same as C36				
C64	Same as C27				
C65	Same as C45				
C66	Same as C43				
C67 Thru C70	Same as C1				
C71	Capacitor, Ceramic, Disc: 1000 pF, 500 V	4	B-GP1000PFP	91418	
C72 Thru C74	Same as C71				
CR1	Diode	10	5082-3080	28480	
CR2	Same as CR1				
CR3	Diode	10	MPN3401	04713	
CR4	Same as CR3				
CR5	Same as CR3				
CR6	Same as CR1				
CR7	Same as CR1				
CR8	Same as CR3				
CR9	Same as CR3				
CR10	Same as CR1				
CR11	Same as CR1				
CR12	Same as CR3				
CR13	Same as CR3				
CR14	Same as CR1				
CR15	Same as CR1				
CR16	Same as CR3				
CR17	Same as CR3				
CR18	Same as CR1				
CR19	Same as CR1				
CR20	Same as CR3				
J1	Connector, Receptacle	4	1009-7511-000	19505	
J2 Thru J4	Same as J1				
L1	Coil, Fixed: 18 μH, 10%	2	1025-50	99800	
L2	Same as L1				
L3	Coil, Fixed	2	16209-11	14632	
L4	Same as L3				
L5	Coil, Fixed: 0.33 μH, 10%	2	1025-08	99800	
L6	Coil, Fixed	2	22292-148	14632	
L7	Coil, Fixed	1	22292-136	14632	

Courtesy of http://BlackRadios.terryo.org

REF DESIG PREFIX **A3A3**

REF DESIG	DESCRIPTION	QTY PER ASSY	MANUFACTURER'S PART NO.	MFR. CODE	RECM VENDOR
L8	Same as L5				
L9	Same as L6				
L10	Coil, Fixed: 0.56 µH, 10%	2	1025-14	99800	
L11	Coil, Fixed	1	22292-149	14632	
L12	Coil, Fixed	1	22292-133	14632	
L13	Same as L10				
L14	Coil, Fixed	1	22292-150	14632	
L15	Coil, Fixed: 1.2 µH, 10%	2	1025-22	99800	
L16	Coil, Variable	2	34959-2	14632	
L17	Coil, Variable	2	34959-4	14632	
L18	Coil, Variable	1	34959-5	14632	
L19	Same as L17				
L20	Same as L16				
L21	Same as L15				
L22	Coil, Fixed: 1.8 mH, 10%	2	1025-26	99800	
L23	Coil, Variable	2	6813	04213	
L24	Coil, Variable	2	34959-3	14632	
L25	Coil, Variable	1	6814	04213	
L26	Same as L24				
L27	Same as L23				
L28	Same as L22				
R1	Resistor, Fixed, Film: 1 kΩ, 5%, 1/8 W	12	CF1/8-1.0K/J	09021	
R2	Same as R1				
R3	Resistor, Fixed, Film: 2.2 kΩ, 5%, 1/8 W	1	CF1/8-2.2K/J	09021	
R4 Thru R13	Same as R1				
R14	Resistor Network	1	4308R-102-101	80294	

Courtesy of http://BlackRadios.terryo.org

5.5.2.2 **Type 794095-1 VHF Low-Band Preselector** REF DESIG PREFIX **A3A4**

REF DESIG	DESCRIPTION	QTY PER ASSY	MANUFACTURER'S PART NO.	MFR. CODE	RECM VENDOR
C1	Capacitor, Ceramic, Disc: 4700 pF, 10%, 100 V	2	8121-100-X7R0-472K	59660	
C2	Capacitor, Ceramic, Disc: 0.1 µF, 20%, 50 V	6	34475-1	14632	
C3	Same as C2				
C4	Same as C1				
C5	Capacitor, Ceramic, Disc: 0.01 µF, 10%, 100 V	8	8121-100-W5R0-103K	59660	
C6	Capacitor, Ceramic, Monolithic: 10 pF, ±2%, 100 V	8	8101-100-NPO-100G	51642	
C7	Same as C6				
C8	Capacitor, Ceramic, Monolithic: 18 pF, 2%, 100 V	8	8111-100-100-180G	51642	
C9	Same as C8				
C10	Capacitor, Ceramic, Monolithic: 3.3 pF, ±.1 pF, 100 V	16	8101-100-100-339B	51642	
C11	Capacitor, Ceramic, Disc: 1.8 pF, ±0.1 pF, 100 V	4	8101-100-C0K0-189B	59660	
C12	Capacitor, Ceramic, Monolithic: 33 pF, ±2%, 100 V	4	8121-150-100-330G	59660	
C13	Capacitor, Ceramic, Disc: 39 pF, 5%, 100 V	2	8121-100-C0G0-390J	59660	
C14	Same as C11				
C15	Same as C12				
C16	Same as C12				
C17	Same as C11				
C18	Same as C12				
C19	Same as C11				
C20	Same as C13				

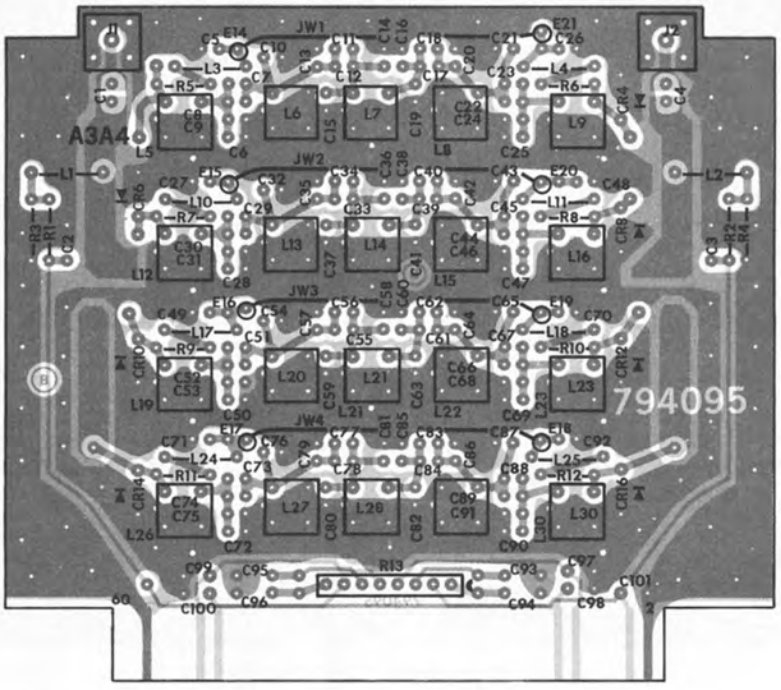

Figure 5-8. Type 794095-1 VHF Low-Band Preselector (A3A4), Location of Components

Courtesy of http://BlackRadios.terryo.org

REF DESIG PREFIX **A3A4**

REF DESIG	DESCRIPTION	QTY PER ASSY	MANUFACTURER'S PART NO.	MFR. CODE	RECM VENDOR
C21	Same as C10				
C22	Same as C6				
C23	Same as C8				
C24	Same as C8				
C25	Same as C6				
C26	Same as C5				
C27	Same as C5				
C28	Same as C10				
C29	Same as C10				
C30	Capacitor, Ceramic, Monolithic: 15 pF, 2%, 100 V	6	8111-100-C0G0-150G	51642	
C31	Same as C30				
C32	Same as C10				
C33	Capacitor, Ceramic, Monolithic: 4.7 pF, ±.1 pF, 100 V	4	100-100-NPO-479B	51642	
C34	Same as C8				
C35	Capacitor, Ceramic, Monolithic: 22 pF, ±2%, 100 V	2	100-100-NPO-220G	51642	
C36	Same as C33				
C37	Same as C8				
C38	Same as C8				
C39	Same as C33				
C40	Same as C8				
C41	Same as C33				
C42	Same as C35				
C43	Same as C10				
C44	Same as C10				
C45	Same as C30				
C46	Same as C30				
C47	Same as C10				
C48	Same as C5				
C49	Same as C5				
C50	Not Used				
C51	Capacitor, Ceramic, Disc: 1.5 pF, ±0.1 pF, 100 V	2	8101-100-C0K0-159B	59660	
C52	Same as C6				
C53	Same as C6				
C54	Same as C10				
C55	Capacitor, Ceramic, Monolithic: 2.2 pF, ±.25 pF, 100 V	6	8101-100-C0J0-229B	51642	
C56	Capacitor, Ceramic, Monolithic: 12 pF, 2%, 100 V	4	100-100-NPO-120G	51642	
C57	Same as C30				
C58	Not Used				
C59	Same as C56				
C60	Same as C56				
C61	Same as C55				

Courtesy of http://BlackRadios.terryo.org

REF DESIG PREFIX **A3A4**

REF DESIG	DESCRIPTION	QTY PER ASSY	MANUFACTURER'S PART NO.	MFR. CODE	RECM VENDOR
C62	Same as C56				
C63	Not Used				
C64	Same as C30				
C65	Same as C10				
C66	Same as C51				
C67	Same as C6				
C68	Same as C6				
C69	Not Used				
C70	Same as C5				
C71	Same as C5				
C72	Same as C55				
C73	Same as C10				
C74	Capacitor, Ceramic, Monolithic: 3.9 pF, ±.1 pF, 100 V	4	100-100-NPO-399B	51642	
C75	Same as C74				
C76	Same as C10				
C77	Same as C10				
C78	Capacitor, Ceramic, Monolithic: 5.6 pF, ±25 pF, 100 V	4	100-100-NPO-569C	51642	
C79	Capacitor, Ceramic, Disc: 6.8 pF, ±.25 pF, 100 V	2	8101-100-C0H0-689C	59660	
C80	Same as C55				
C81	Same as C78				
C82	Same as C78				
C83	Same as C10				
C84	Same as C78				
C85	Same as C55				
C86	Same as C79				
C87	Same as C10				
C88	Same as C10				
C89	Same as C74				
C90	Same as C74				
C91	Same as C55				
C92	Same as C5				
C93 Thru C96	Same as C2				
C97	Capacitor, Ceramic, Disc: 1000 pF, 500 V	5	59Z5U102P	91984	
C98 Thru C101	Same as C97				
CR1	Diode	16	5082-3188	28480	
CR2 Thru CR16	Same as CR1				
J1	Connector, Receptacle	2	1009-7511-000	19505	

Courtesy of http://BlackRadios.terryo.org

REF DESIG PREFIX **A3A4**

REF DESIG	DESCRIPTION	QTY PER ASSY	MANUFACTURER'S PART NO.	MFR. CODE	RECM VENDOR
J2	Same as J1				
L1	Coil, Fixed: 18 µH, 10%	2	1025-50	99800	
L2	Same as L1				
L3	Coil, Fixed: 47 µH, 10%	8	1025-60	99800	
L4	Same as L3				
L5	Coil, Variable	3	6740-12	04213	
L6	Coil, Variable	2	6740-10		
L7	Coil, Variable	1	6806	04213	
L8	Same as L6				
L9	Same as L5				
L10	Same as L3				
L11	Same as L3				
L12	Coil, Variable	2	6740-9	04213	
L13	Coil, Variable	2	6740-8	04213	
L14	Same as L5				
L15	Same as L13				
L16	Same as L12				
L17	Same as L3				
L18	Same as L3				
L19	Coil, Variable	2	6807	04213	
L20	Coil, Variable	2	6808	04213	
L21	Coil, Variable	1	6809	04213	
L22	Same as L20				
L23	Same as L19				
L24	Same as L3				
L25	Same as L3				
L26	Coil, Variable	2	6810	04213	
L27	Coil, Variable	2	6811	04213	
L28	Coil, Variable	1	7220	04213	
L29	Same as L27				
L30	Same as L26				
R1	Resistor, Fixed, Film: 2.2 kΩ, 5%, 1/8 W	4	CF1/8-2.2K/J	09021	
R2 Thru R4	Same as R1				
R5	Resistor, Fixed, Film: 1 kΩ, 5%, 1/8 W	8	CF1/8-1.0K/J	09021	
R6 Thru R12	Same as R5				
R13	Resistor Network: 100Ω, 2%, 1/5 W	1	4308R-102-101	80294	

Courtesy of http://BlackRadios.terryo.org

5.5.2.3 **Type 794097-2 Preamplifier** REF DESIG PREFIX **A3A5**

REF DESIG	DESCRIPTION	QTY PER ASSY	MANUFACTURER'S PART NO.	MFR. CODE	RECM VENDOR
A1	500 MHz LP Filter	1	370285-1	14632	
C1	Capacitor, Ceramic, Disc: 0.01 µF, 20%, 50 V	8	34453-1	72982	
C2 Thru C4	Same as C1				
C5	Capacitor, Ceramic, Disc: .05 µF, 10%, 50 V	1	1210-050-X7R-503KS	55969	
C6	Capacitor, Ceramic, Chip: 2200 pF, 10%, 50V	2	C1005C222K5XAH	26654	
C7	Same as C6				
C8	Capacitor, Ceramic, Disc: 0.47 µF, 10%, 100 V	1	8121-100-X7R0-473K	59660	
C9	Same as C1				
C10	Same as C1				
C11	Capacitor, Ceramic, Disc: 1.0 µF, 20%, 50 V	1	8131-050-651-105M	59660	
C12	Same as C1				
C13	Same as C1				
C14	Capacitor, Ceramic, Disc: 1000 pF, 10%, 100 V	4	8121-100-X7R0-102K	59660	
C15 Thru C17	Same as C14				
C18	Capacitor, Ceramic, Chip: .047 µF, ±10%, 50 Vdc	1	841250-23	14632	
CR1	Diode	3	5082-3080	28480	
CR2	Same as CR1				
CR3	Same as CR1				
CR4	Diode	3	5082-2800	28480	
CR5	Same as CR4				
CR6	Same as CR4				

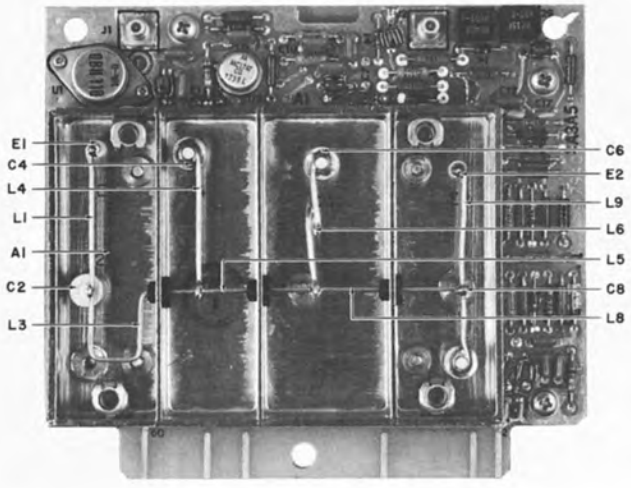

Figure 5-9. Type 794097-2 Preamplifier (A3A5), and Type 370285-1 500 MHz LP Filter (A3A5A1), Top Views, Location of Components

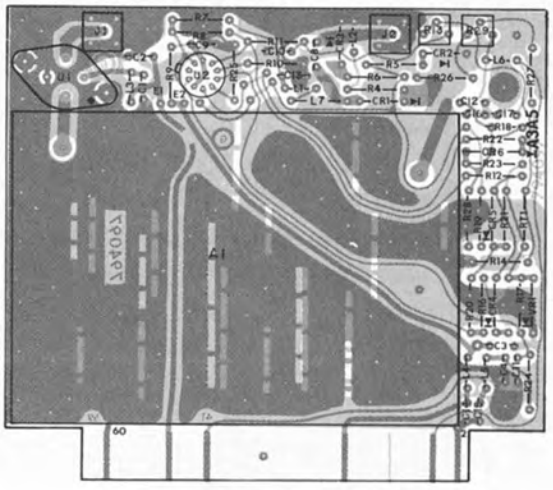

Figure 5-10. Type 794097-2 Preamplifier (A3A5), Location of Components

Courtesy of http://BlackRadios.terryo.org

REF DESIG PREFIX **A3A5**

REF DESIG	DESCRIPTION	QTY PER ASSY	MANUFACTURER'S PART NO.	MFR. CODE	RECM VENDOR
J1	Connector, Receptacle	2	1009-7511-000	19505	
J2	Same as J1				
L1	Coil, Fixed	7	16209-10	14632	
L2 Thru L7	Same as L1				
R1 Thru R3	Not Used				
R4	Resistor, Fixed, Film: 499Ω, 1%, 1/10 W	1	RN55C4990F	81349	
R5	Resistor, Fixed, Film: 8.25 k, 1%, 1/10 W	2	RN55C8251F	81349	
R6	Same as R5				
R7	Resistor, Fixed, Film: 100Ω, 1%, 1/10 W	1	RN55C1000F	81349	
R8	Resistor, Fixed, Film: 412 kΩ, 1%, 1/4 W	1	CC4123F	01121	
R9	Resistor, Fixed, Film: 100Ω, 5%, 1/4 W	2	CF1/4-100 OHMS/J	09021	
R10	Resistor, Fixed, Film: 38.3 kΩ, 1%, 1/10 W	1	RN55C3832F	81349	
R11	Resistor, Fixed, Film: 261 kΩ, 1%, 1/4 W	1	MF4C/261K/F	80031	
R12	Resistor, Fixed, Film: 100 kΩ, 1%, 1/10 W	5	RN55C1003F	81349	
R13	Resistor, Trimmer, Film: 100 kΩ, 10%, 1/2 W	1	62PAR100K	73138	
R14	Resistor, Fixed, Film: 9.09 kΩ, 1%, 1/10 W	1	RN55C9091F	81349	
R15	Resistor, Fixed, Film: 475 kΩ, 1%, 1/4 W	1	CC4753F	01121	
R16	Resistor, Fixed, Film: 121 kΩ, 1%, 1/4 W	1	MF4C/121 K/F	80031	
R17	Resistor, Fixed, Film: 6.19 kΩ, 1%, 1/10 W	1	RN55C6191F	81349	
R18	Resistor, Fixed, Film: 309 kΩ, 1%, 1/4 W	1	CC3093F	01121	
R19	Same as R12				
R20	Resistor, Fixed, Film: 42.2 kΩ, 1%, 1/10 W	1	RN55C4222F	81349	
R21	Resistor, Fixed, Film: 619 kΩ, 1%, 1/4 W	1	CC6193F	01121	
R22	Same as R12				
R23	Resistor, Fixed, Film: 68.1 kΩ, 1%, 1/10 W	1	RN55C6812F	81349	
R24	Same as R9				
R25	Same as R12				
R26	Resistor, Fixed, Film: 34.8 kΩ, 1%, 1/10 W	1	RN55C3482F	81349	
R27	Same as R12				
R28	Resistor, Fixed, Film: 21.5 kΩ, 1%, 1/10 W	1	RN55C2152F	81349	
R29	Resistor, Trimmer, Film: 20 kΩ, 10%, 1/2 W	1	62PAR20K	73138	
R30	Not Used				
R31	Not Used				
RT1	Thermistor: 3.9 kΩ, 5%, 1/8 W	1	DG125-392J	15454	
U1	Amplifier: 10-500 MHz	1	QBH-110	55027	
U2	Integrated Circuit	1	747HC	07263	
VR1	Diode: Zener, 6.3 V Silicon	1	.4M6.3AZ2	04713	

Courtesy of http://BlackRadios.terryo.org

5.5.2.3.1 Part 370285-1 500 MHz LP Filter REF DESIG PREFIX **A3A5A1**

REF DESIG	DESCRIPTION	QTY PER ASSY	MANUFACTURER'S PART NO.	MFR. CODE	RECM VENDOR
C1	Not Used				
C2	Capacitor, Variable, Air: .8-10 pF, 250 V	4	5202	91293	
C3	Not Used				
C4	Same as C2				
C5	Not Used				
C6	Same as C2				
C7	Not Used				
C8	Same as C2				
L1	Inductor	1	170203-1	14632	
L2	Part of L1				
L3	Part of L1				
L4	Inductor	1	180074-1	14632	
L5	Part of L1				
L6	Inductor	1	180075-1	14632	
L7	Part of L1				
L8	Inductor	1	180076-1	14632	
L9	Part of L8				

Courtesy of http://BlackRadios.terryo.org

5.5.2.4 **Type 796493-1 1st Converter** REF DESIG PREFIX **A3A6**

REF DESIG	DESCRIPTION	QTY PER ASSY	MANUFACTURER'S PART NO.	MFR. CODE	RECM VENDOR
A1	1st Converter Chassis	1	380835-1	14632	
C1	Capacitor, Ceramic, Disc: 0.01 µF, 20%, 50 V	1	34453-1	14632	
L1	Coil, Fixed, Molded: 1µH	2	1025-94	99800	
L2	Same as L1				

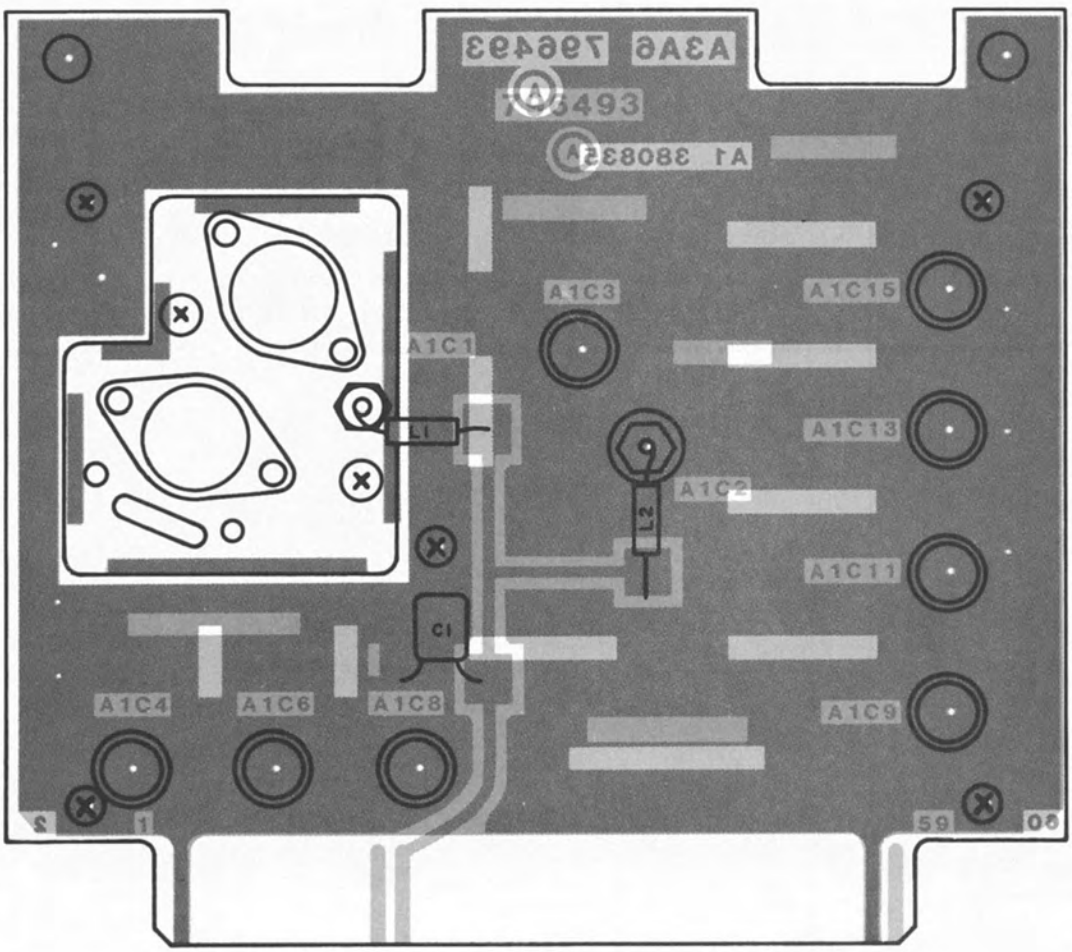

Figure 5-11. Type 796493-1 1st Converter (A3A6), Location of Components

Courtesy of http://BlackRadios.terryo.org

5.5.2.4.1 **Part 380835-1 1st Converter Chassis** REF DESIG PREFIX **A3A6A1**

REF DESIG	DESCRIPTION	QTY PER ASSY	MANUFACTURER'S PART NO.	MFR. CODE	RECM VENDOR
A1	Mixer/IF Assembly	1	281017-1	14632	
A2	IF Amplifier	1	281016-1	14632	
C1	Capacitor, Modified: 500 V	2	33728-14	14632	
C2	Same as C1				
C3	Capacitor, Variable, Air: 0.6-6 pF, 250 V	1	5701	91293	
C4	Capacitor, Variable, Air: 0.8-10 pF, 250 V	7	5752	91293	
C5	Capacitor, Composition, Tubular: .27 pF, 10%, 500 V	2	QCO .27 PFK	95121	
C6	Same as C4				
C7	Same as C5				
C8	Same as C4				
C9	Same as C4				
C10	Capacitor, Composition, Tubular: .30 pF, 10%, 500 V	2	QCO .30 PFK	95121	
C11	Same as C4				
C12	Capacitor, Composition, Tubular: .22 pF, 100%, 500 V	1	QCO .22 PFK	95121	
C13	Same as C4				
C14	Same as C10				
C15	Same as C4				

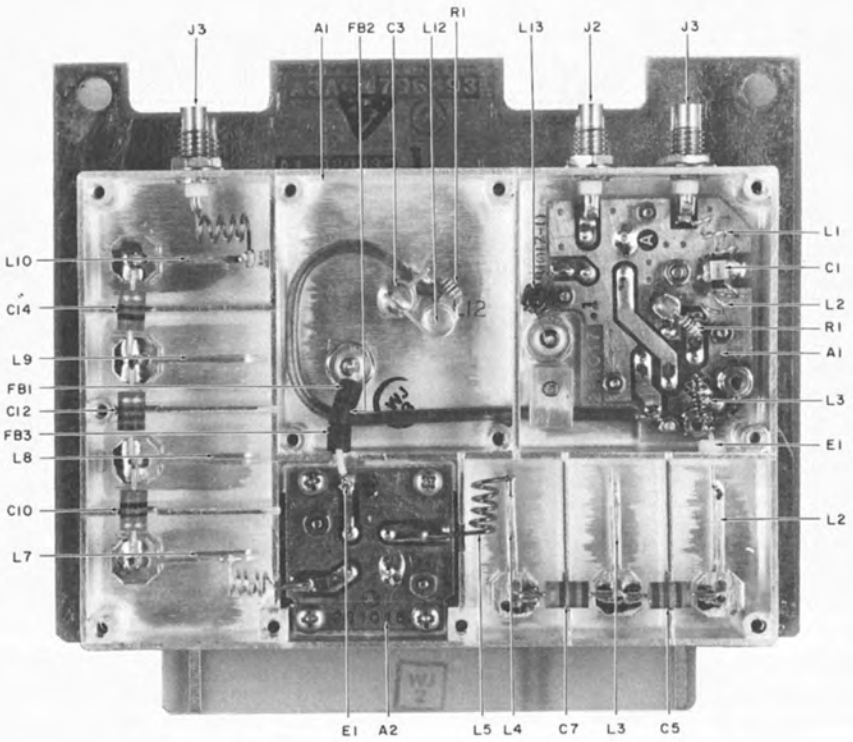

Figure 5-12. Type 796493-1 1st Converter (A3A6), and Part 380835-1 1st Converter Chassis (A3A6A1), Top Views, Location of Components

Courtesy of http://BlackRadios.terryo.org

REF DESIG PREFIX **A3A6A1**

REF DESIG	DESCRIPTION	QTY PER ASSY	MANUFACTURER'S PART NO.	MFR. CODE	RECM VENDOR
C16	Capacitor, Ceramic, Chip: 1.5 pF, ±.1 pF, 500 V	1	ATC700B1R5BP500X	29990	
FB1	Ferrite Bead	3	P5-1288	01037	
FB2	Same as FB1				
FB3	Same as FB1				
J1	Connector, Jack	3	1004-7511-002	19505	
J2	Same as J1				
J3	Same as J1				
L1	Inductor Assembly	1	180494	14632	
L2	Inductor	7	180468-1	14632	
L3	Same as L2				
L4	Same as L2				
L5	Inductor	1	22292-155	14632	
L6	Coil, Fixed, Molded: 0.22 μH	1	1025-04	99800	
L7 Thru L10	Same as L2				
L11	Coil Inductor	1	22292-156	14632	
L12	Inductor/Coax	1	280327-1	14632	
L13	Coil	1	16209-10	14632	
R1	Resistor, Fixed, Film: 51Ω, 5%, 1/8 W	1	CF1/8-51 OHMS/J	09021	
U1	Mixer, Double Balanced	1	M2T	27956	
U2	Amplifier	1	A17	14482	

Courtesy of http://BlackRadios.terryo.org

5.5.2.4.1.1 **Part 281017-1 Mixer/IF Assembly** REF DESIG PREFIX **A3A6A1A1**

REF DESIG	DESCRIPTION	QTY PER ASSY	MANUFACTURER'S PART NO.	MFR. CODE	RECM VENDOR
C1	Capacitor, Ceramic, Chip: 5.1 pF, ±.25 pF, 500 V	1	ATC700B5R1CP500X	29990	
C2	Capacitor, Ceramic, Chip: 2.4 pF, ±.25 pF, 500 V	1	ATC700B2R4CP500X	29990	
L1	Coil, Fixed	2	180112-1	14632	
L2	Same as L1				
R1	Resistor, Fixed, Film: 100Ω, 5%, 1/8 W	1	CF1/8-100 OHMS/J	09021	

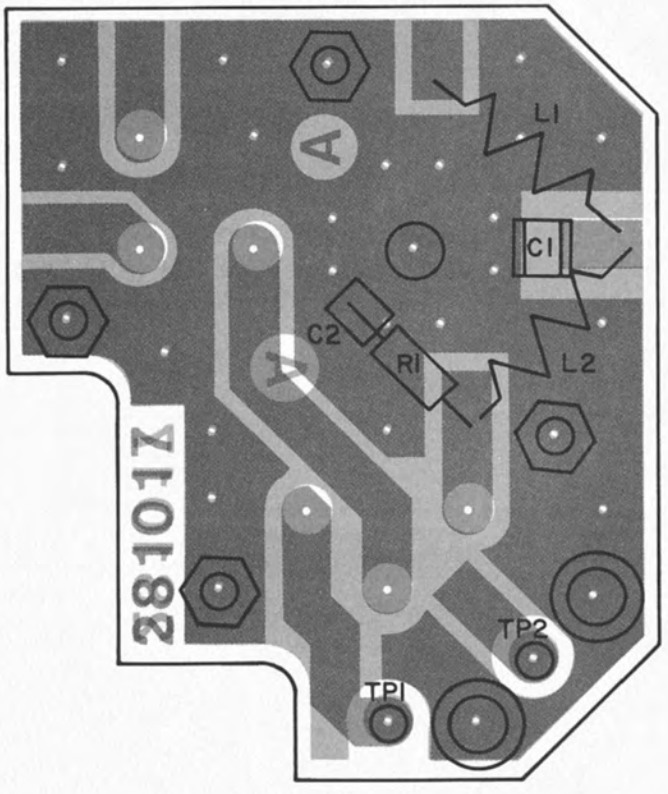

Figure 5-13. Part 281017-1 Mixer/IF Assembly (A3A6A1A1), Location of Components

Courtesy of http://BlackRadios.terryo.org

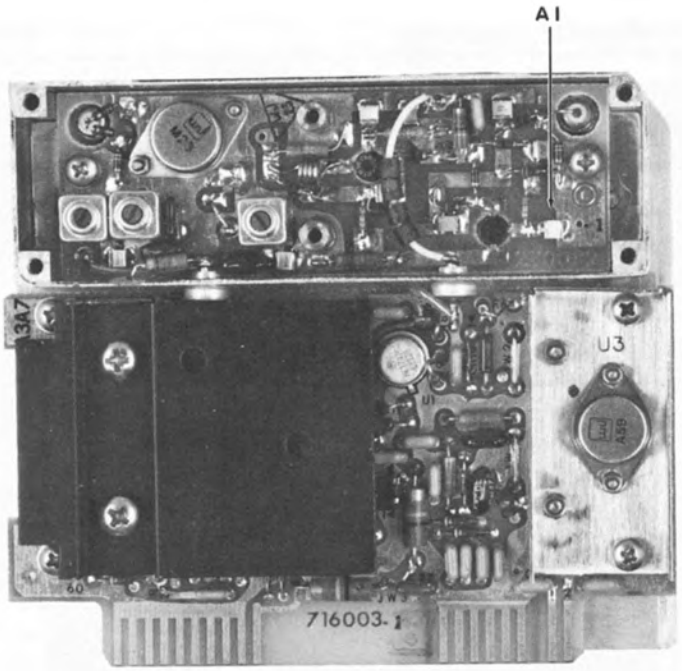

Figure 5-14. Type 716003-3 2nd Converter (A3A7), Part 370396-2 LO Amplifier Assembly (A3A7A1), and Part 270082-2 LO Amplifier Board (A3A7A1A1)

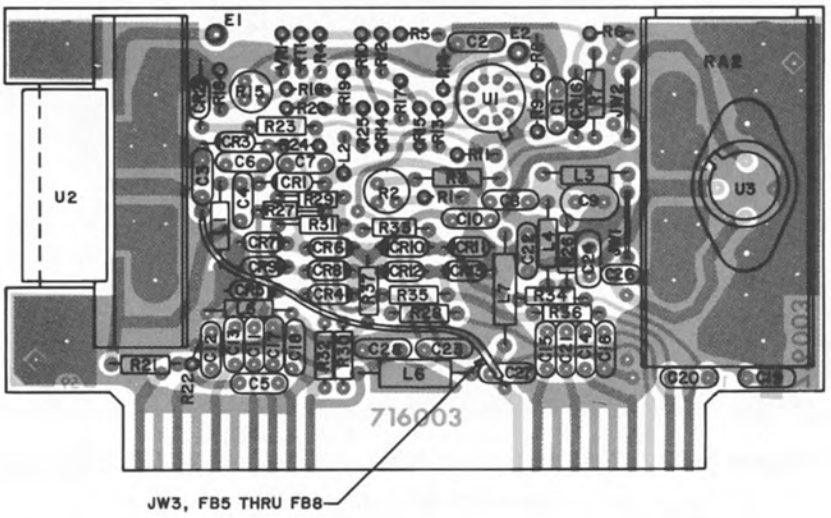

Figure 5-15. Type 716003-3 2nd Converter (A3A7), Location of Components

Courtesy of http://BlackRadios.terryo.org

5.5.2.5 **Type 716003-3 2nd Converter** REF DESIG PREFIX **A3A7**

REF DESIG	DESCRIPTION	QTY PER ASSY	MANUFACTURER'S PART NO.	MFR. CODE	RECM VENDOR
A1	LO Amplifier Assembly	1	370396-2	14632	
C1	Capacitor, Ceramic, Disc: 0.01 µF, 20%, 50 V	22	34453-1	14632	
C2 Thru C8	Same as C1				
C9	Capacitor, Mica, Dipped: 150 pF, 2%, 500 V	1	CM04FD151G03	81349	
C10 Thru C23	Same as C1				
C24	Capacitor, Mica, Dipped: 110 pF, 2%, 500 V	1	CM04FD111G03	81349	
C25	Capacitor, Ceramic, Monolithic: 10 pF, 5%, 100 V	1	8101-100C0G0-100D	59660	
C26	Capacitor, Ceramic, Chip: 0.056 µF, 50 V	1	C225C563P5XAH	05397	
C27	Capacitor, Ceramic, Disc: 0.1 µF, 20%, 50 V	2	34475-1	14632	
C28	Same as C27				
C29	Capacitor, Ceramic, Chip: 4.3 pF, 500 V	1	ATC700B4R3DP500X	29990	
CR1	Diode	3	5082-3081	28480	
CR2	Same as CR1				
CR3	Same as CR1				
CR4	Diode	10	MPN3401	04713	
CR5 Thru CR13	Same as CR4				
CR14	Diode	3	5082-2800	28480	
CR15	Same as CR14				
CR16	Same as CR14				
FB1	Ferrite Bead	2	P5-1288	01037	
FB2	Same as FB1				
FB3	Not Used				
FB4	Not Used				
FB5	Ferrite Bead	4	56-590-65-4A	02114	
FB6 Thru FB8	Same as FB5				
L1	Coil, Fixed: 10 µH	2	1025-44	99800	
L2	Same as L1				
L3	Coil, Fixed: 0.33 µH	2	1025-08	99800	
L4	Same as L3				
L5	Coil, Fixed, Molded: 27 µH	1	1025-54	99800	
L6	Coil, Fixed: 39 µH, 10%,	2	1537-56	71279	
L7	Same as L6				
R1	Resistor, Fixed, Film: 34.8 kΩ, 1%, 1/10 W	1	RN55C3482F	81349	
R2	Resistor, Trimmer, Film: 20 kΩ, 10%, 1/2 W	1	62PR20K	73138	
R3	Resistor, Fixed, Film: 100 kΩ, 1%, 1/10 W	5	RN55C1003F	81349	
R4	Resistor, Fixed, Film: 6.19 kΩ, 1%, 1/10 W	1	RN55C6191F	81349	

Courtesy of http://BlackRadios.terryo.org

REF DESIG PREFIX **A3A7**

REF DESIG	DESCRIPTION	QTY PER ASSY	MANUFACTURER'S PART NO.	MFR. CODE	RECM VENDOR
R5	Resistor, Fixed, Film: 68.1 kΩ, 1%, 1/10 W	1	RN55C6812F	81349	
R6	Resistor, Fixed, Film: 21.5 kΩ, 1%, 1/10 W	1	RN55C2152F	81349	
R7	Same as R3				
R8	Same as R3				
R9	Resistor, Fixed, Film: 309 kΩ, 1%, 1/4 W	1	CC3093F	01121	
R10	Resistor, Fixed, Film: 619 kΩ, 1%, 1/4 W	1	CC6193F	01121	
R11	Same as R3				
R12	Resistor, Fixed, Film: 475 kΩ, 1%, 1/4 W	1	CC4753F	01121	
R13	Same as R3				
R14	Resistor, Fixed, Film: 38.3 kΩ, 1%, 1/10 W	1	RN55C3832F	81349	
R15	Resistor, Trimmer, Film: 100 kΩ, 10%, 1/2 W	1	62PR100K	73138	
R16	Resistor, Fixed, Film: 261 kΩ, 1%, 1/4 W	1	MF4C/261K/F	80031	
R17	Resistor, Fixed, Film: 121 kΩ, 1%, 1/4 W	1	MF4C/121K/F	80031	
R18	Resistor, Fixed, Film: 9.09 kΩ, 1%, 1/10 W	1	RN55C9091F	81349	
R19	Resistor, Fixed, Film: 42.2 kΩ, 1%, 1/10 W	1	RN55C4222F	81349	
R20	Resistor, Fixed, Film: 412 kΩ, 1%, 1/4 W	1	CC4123F	01121	
R21	Resistor, Fixed, Film: 110Ω, 5%, 1/8 W	1	CF1/8-110 OHMS/J	09021	
R22	Resistor, Fixed, Film: 62Ω, 5%, 1/8 W	1	CF1/8-62 OHMS/J	09021	
R23	Resistor, Fixed, Film: 4.7 kΩ, 5%, 1/8 W	2	CF1/8-4.7K/J	09021	
R24	Same as R23				
R25	Resistor, Fixed, Film: 825Ω, 1%, 1/10 W	1	RN55C8250F	81349	
R26	Resistor, Fixed, Film: 100Ω, 5%, 1/8 W	1	CF1/8-100 OHMS/J	09021	
R27	Resistor, Fixed, Film: 10 kΩ, 5%, 1/8 W	5	CF1/8-10K/J	09021	
R28	Resistor, Fixed, Film: 620Ω, 5%, 1/8 W	5	CF1/8-620 OHMS/J	09021	
R29	Same as R27				
R30	Same as R28				
R31	Same as R27				
R32	Same as R28				
R33	Same as R27				
R34	Same as R28				
R35	Same as R27				
R36	Same as R28				
R37	Resistor, Fixed, Film: 390Ω, 5%, 1/8W	1	CF1/8-390 OHMS/J	09021	
RT1	Thermistor: 3.9 kΩ, 5%, 1/8 W	1	DG125-392J	15454	
U1	Integrated Circuit	1	747HC	07263	
U2	Integrated Circuit	1	CA2818	01281	
U3	Amplifier	1	A59	27956	
VR1	Voltage Regulator	1	.4M6.3AZ2	04713	

Courtesy of http://BlackRadios.terryo.org

5.5.2.5.1 **Part 370396-2 LO Amplifier Assembly** REF DESIG PREFIX **A3A7A1**

REF DESIG	DESCRIPTION	QTY PER ASSY	MANUFACTURER'S PART NO.	MFR. CODE	RECM VENDOR
A1	LO Amplifier Board	1	270082-2	14632	
C1	Capacitor, Ceramic, Feedthru: 470 pF, 20%, 500 V	1	54-794-009-471M	33095	
C2	Capacitor, Ceramic, Feedthru: 33 pF, 10%, 500 V	1	54-794-001-3301	33095	
FB1	Ferrite Bead	4	56-590-65-4A	02114	
FB2 Thru FB4	Same as FB1				
J1	Connector, Receptacle	1	1012-1511-000	19505	
L1	Coil, Fixed: 0.39 μH, 10%	1	1025-10	99800	
P1	Connector, Plug	1	50-328-3875-91	98291	
R1	Resistor, Fixed, Film: 330Ω, 5%, 1/8 W	1	C3-330R-5PCT	24546	
R2	Resistor, Fixed, Film: 18Ω, 5%, 1/8 W	1	C3-18R-5PCT	24546	
W1	Cable Assembly	1	17300-188-2	14632	

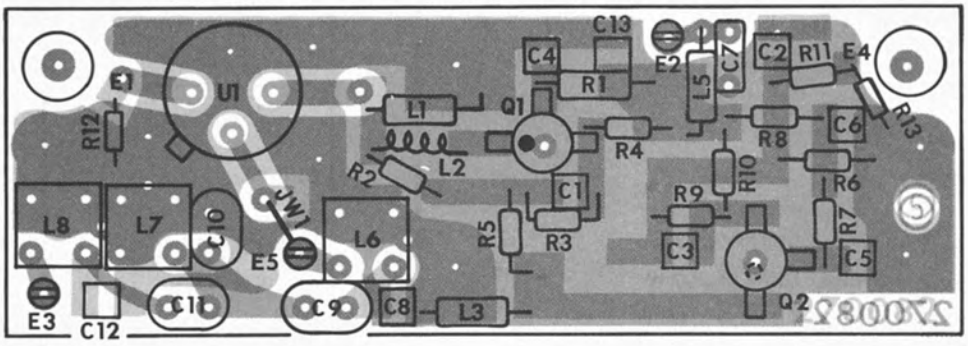

Figure 5-16. Part 270082-2 LO Amplifier Board (A3A7A1A1), Location of Components

Courtesy of http://BlackRadios.terryo.org

5.5.2.5.1.1 Part 270082-2 LO Amplifier Board

REF DESIG PREFIX **A3A7A1A1**

REF DESIG	DESCRIPTION	QTY PER ASSY	MANUFACTURER'S PART NO.	MFR. CODE	RECM VENDOR
C1	Capacitor, Ceramic, Chip: 47 pF, 5%, 500 V	3	ATC100B470JP500	29990	
C2	Capacitor, Ceramic, Chip: 2.1 pF, ±0.1 pF, 500 V	1	ATC700B2R1BP500	29990	
C3	Capacitor, Ceramic, Chip: 470 pF, 10%, 100 V	2	C1210E471K1GAH	31433	
C4	Same as C1				
C5	Same as C1				
C6	Capacitor, Ceramic, Chip: 1000 pF, 20%, 50 V	1	ATC700B102MP50X	29990	
C7	Capacitor, Ceramic, Disc: 0.01 µF, 20%, 50 V	1	34453-1	14632	
C8	Capacitor, Ceramic, Chip: 39 pF, 5%, 500 V	2	ATC700B390JP500X	29990	
C9	Capacitor, Mica, Dipped: 22 pF, 5%, 500 V	2	CM04ED220J03	81349	
C10	Capacitor, Mica, Dipped: 24 pF, 5%, 500 V	1	CM04ED240J03	81349	
C11	Same as C9				
C12	Same as C8				
C13	Same as C3				
C14	Capacitor, Ceramic, Chip: 15 pF, 5%, 500 V	1	ATC700B150JP500X	29990	
L1	Coil, Fixed: 0.68 µH	2	1025-16	99800	
L2	Not Used				
L3	Same as L1				
L4	Not Used				
L5	Coil, Fixed: 33 µH, 10%	1	1025-56	99800	
L6	Coil, Variable: 1.0 µH	3	6740-15	04213	
L7	Same as L6				
L8	Same as L6				
Q1	Transistor	2	BFR-96	73445	
Q2	Same as Q1				
R1	Resistor, Fixed, Film: 82.5Ω, 1%, 1/10 W	1	RN55C82R5F	81349	
R2	Resistor, Fixed, Film: 100Ω, 5%, 1/8 W	2	C3-100R-5PCT	24546	
R3	Resistor, Fixed, Film: 2.2 kΩ, 5%, 1/8 W	1	C3-2.2K-5PCT	24546	
R4	Resistor, Fixed, Film: 1.0 kΩ, 5%, 1/8 W	2	C3-1K-5PCT	24546	
R5	Resistor, Fixed, Film: 2.7Ω, 5%, 1/8 W	2	CF1/8-2.7 OHMS/J	09021	
R6	Resistor, Fixed, Film: 330Ω, 5%, 1/8 W	3	C3-330R-5CT	24546	
R7	Same as R5				
R8	Same as R2				
R9	Resistor, Fixed, Film: 2.7 kΩ, 5%, 1/8 W	1	C3-2.7K-5PCT	24546	
R10	Same as R4				
R11	Resistor, Fixed, Film: 18Ω, 5%, 1/8 W	1	C3-330R-5PCT	24546	
R12	Same as R6				
R13	Same as R6				
R14	Resistor, Fixed, Film: 47Ω, 5%, 1/8 W	1	CF1/8-47 OHMS/J	09021	
U1	Mixer, Double Balanced	1	M2B	14482	

Courtesy of http://BlackRadios.terryo.org

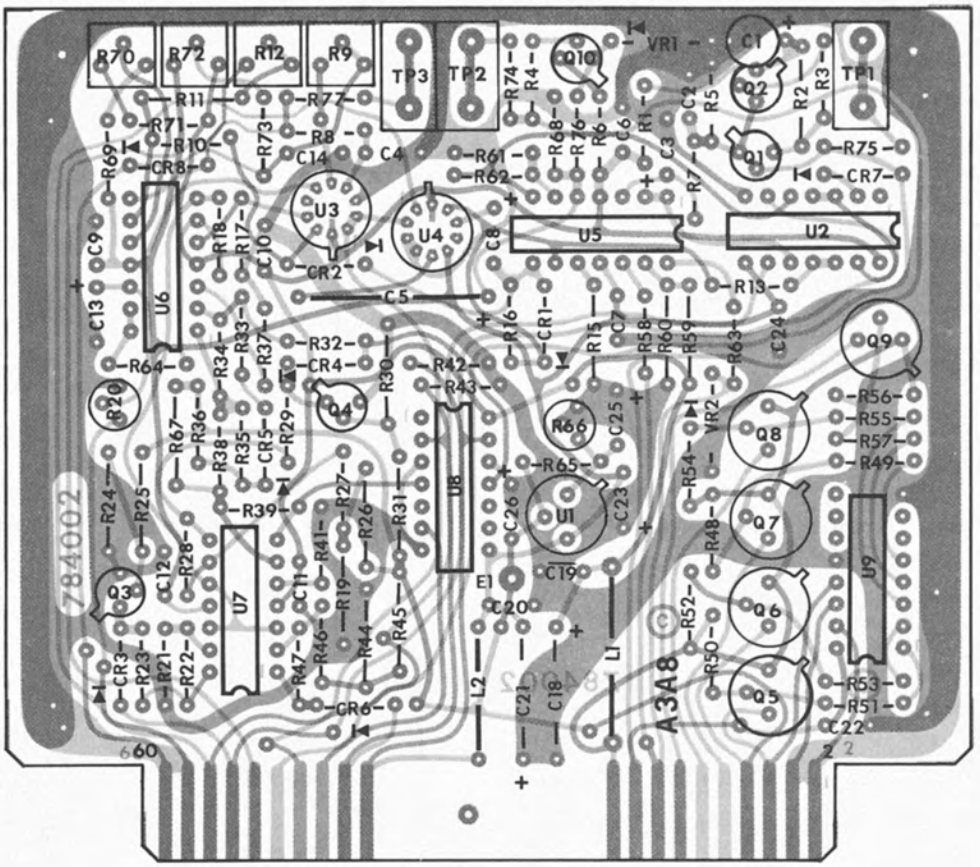

Figure 5-17. Type 784002-1 AGC Amplifier (A3A8), Location of Components

Courtesy of http://BlackRadios.terryo.org

5.5.2.6 Type 784002-1 AGC Amplifier

REF DESIG PREFIX **A3A8**

REF DESIG	DESCRIPTION	QTY PER ASSY	MANUFACTURER'S PART NO.	MFR. CODE	RECM VENDOR
C1	Capacitor, Electrolytic, Tantalum: 2.2 µF, 20%, 35 V	3	196D225X0035JE3	56289	
C2	Capacitor, Ceramic, Disc: 0.1 µF, 20%, 50 V	4	34475-1	14632	
C3	Capacitor, Electrolytic, Tantalum: 4.7 µF, 20%, 35 V	2	196D475X003JE3	56289	
C4	Same as C2				
C5	Capacitor, Electrolytic, Tantalum: 45 µF, 20%, 30 V	1	MTP456M030P1B	76055	
C6	Capacitor, Ceramic, Disc: 0.01 µF, 20%, 50 V	9	34453-1	14632	
C7	Same as C6				
C8	Same as C1				
C9 Thru C12	Same as C6				
C13	Same as C1				
C14	Same as C2				
C15 Thru C17	Not Used				
C18	Capacitor, Electrolytic, Tantalum: 10 µF, 20%, 30 V	2	MPT106M030P1A	76055	
C19	Same as C6				
C20	Same as C6				
C21	Same as C18				
C22	Same as C2				
C23	Same as C3				
C24	Same as C6				
C25	Capacitor, Electrolytic, Tantalum: 3.3 µF, 20%, 35 V	2	196D335X0035JE3	56289	
C26	Same as C25				
CR1	Diode	8	1N462A	80131	
CR2 Thru CR8	Same as CR1				
L1	Coil, Fixed: 3000 µH, 5%	1	2500-50	99800	
L2	Coil, Fixed: 330 µH, 5%	1	2500-04	99800	
Q1	Transistor	4	2N2222A	80131	
Q2	Transistor	1	2N3251	80131	
Q3	Same as Q1				
Q4	Same as Q1				
Q5	Transistor	5	2N4037	80131	
Q6 Thru Q9	Same as Q5				
Q10	Same as Q1				
R1	Resistor, Fixed, Film: 47Ω, 5%, 1/8 W	1	CF1/8-47 OHMS/J	09021	
R2	Resistor, Fixed, Film: 2.2 kΩ, 5%, 1/4 W	1	CF1/4-2.2K/J	09021	
R3	Resistor, Fixed, Film: 22Ω, 5%, 1/8 W	1	CF1/8-22 OHMS/J	09021	

Courtesy of http://BlackRadios.terryo.org

REF DESIG PREFIX **A3A8**

REF DESIG	DESCRIPTION	QTY PER ASSY	MANUFACTURER'S PART NO.	MFR. CODE	RECM VENDOR
R4	Resistor, Fixed, Film: 100 kΩ, 5%, 1/8 W	5	CF1/8-100K/J	09021	
R5	Resistor, Fixed, Film: 510 kΩ, 5%, 1/8 W	1	CF1/8-510K/J	09021	
R6	Resistor, Fixed, Film: 100Ω, 5%, 1/8 W	1	CF1/8-100 OHMS/J	09021	
R7	Resistor, Fixed, Film: 220 kΩ, 5%, 1/8 W	1	CF1/8-220K/J	09021	
R8	Resistor, Fixed, Film: 56 kΩ, 5%, 1/8 W	1	CF1/8-56K/J	09021	
R9	Resistor, Trimmer, Film: 100 kΩ, 10%, 1/2 W	2	62PAR100K	73138	
R10	Resistor, Fixed, Film: 10 kΩ, 5%, 1/8 W	5	CF1/8-10K/J	09021	
R11	Resistor, Fixed, Film: 82 kΩ, 5%, 1/4 W	1	CF1/4-82K/J	09021	
R12	Resistor, Trimmer, Film: 50 kΩ, 10% 1/2 W	1	62PAR50K	73138	
R13	Same as R4				
R14	Not Used				
R15	Resistor, Fixed, Film: 3.6 kΩ, 5%, 1/8 W	1	CF1/8-3.6K/J	09021	
R16	Same as R4				
R17	Resistor, Fixed, Film: 2.2 kΩ, 5%, 1/8 W	4	CF1/8-2.2K/J	09021	
R18	Resistor, Fixed, Film: 6.8 kΩ, 5%, 1/8 W	2	CF1/8-6.8K/J	09021	
R19	Resistor, Fixed, Film: 392Ω, 1%, 1/10 W	1	RN55C3920F	81349	
R20	Resistor, Trimmer, Film: 10 kΩ, 10%, 1/2 W	1	62PR10K	73138	
R21	Resistor, Fixed, Film: 2.7 kΩ, 5%, 1/8 W	1	CF1/8-2.7K/J	09021	
R22	Resistor, Fixed, Film: 8.2 kΩ, 5%, 1/8 W	1	CF1/8-8.2K/J	09021	
R23	Resistor, Fixed, Film: 1 kΩ, 5%, 1/8 W	4	CF1/8-1K/J	09021	
R24	Resistor, Fixed, Film: 3.92 kΩ, 1%, 1/10 W	1	RN55C3921F	81349	
R25	Resistor, Fixed, Film: 4.75 kΩ, 1%, 1/10 W	1	RN55C4751F	81349	
R26	Resistor, Fixed, Film: 2.61 kΩ, 1%, 1/10 W	1	RN55C2611F	81349	
R27	Resistor, Fixed, Film: 12 kΩ, 5%, 1/8 W	2	CF1/8-12K/J	09021	
R28	Resistor, Fixed, Film: 150 kΩ, 5%, 1/8 W	1	CF1/8-150K/J	09021	
R29	Resistor, Fixed, Composition: 470Ω, 5%, 1/8 W	1	RCR05G471JS	81349	
R30	Resistor, Fixed, Film: 10 kΩ, 1%, 1/10 W	1	RN55C1002F	81349	
R31	Resistor, Fixed, Film: 2.0 kΩ, 1%, 1/10 W	1	RN55C2001F	81349	
R32	Resistor, Fixed, Film: 7.5 kΩ, 5%, 1/8 W	1	CF1/8-7.5K/J	09021	
R33	Resistor, Fixed, Film: 1.3 kΩ, 5%, 1/8 W	1	CF1/8-1.3K/J	09021	
R34	Resistor, Fixed, Film: 15 kΩ, 5%, 1/8 W	2	CF1/8-15K/J	09021	
R35	Resistor, Fixed, Film: 2 kΩ, 5%, 1/8 W	1	CF1/8-2K/J	09021	
R36	Resistor, Fixed, Film: 3.9 kΩ, 5%, 1/8 W	1	CF1/8-3.9K/J	09021	
R37 Thru R39	Same as R10				
R40	Not Used				
R41	Same as R18				
R42	Same as R4				
R43	Same as R4				
R44	Resistor, Fixed, Film: 324Ω, 1%, 1/10 W	1	RN55C3240F	81349	

Courtesy of http://BlackRadios.terryo.org

REF DESIG PREFIX **A3A8**

REF DESIG	DESCRIPTION	QTY PER ASSY	MANUFACTURER'S PART NO.	MFR. CODE	RECM VENDOR
R45	Resistor, Fixed, Film: 1.18 kΩ, 1%, 1/10 W	1	RN55C1181F	81349	
R46	Same as R34				
R47	Resistor, Fixed, Film: 82 kΩ, 5%, 1/8 W	1	CF1/8-82K/J	09021	
R48	Resistor, Fixed, Film: 4.7 kΩ, 5%, 1/8 W	10	CF1/8-4.7K/J	09021	
R49 Thru R57	Same as R48				
R58	Resistor, Fixed, Film: 3.3 kΩ, 5%, 1/8 W	1	CF1/8-3.3K/J	09021	
R59	Resistor, Fixed, Film: 16.2 kΩ, 1%, 1/10 W	1	RN55C1622F	81349	
R60	Resistor, Fixed, Film: 8.66 kΩ, 1%, 1/10 W	1	RN55C8661F	81349	
R61	Same as R17				
R62	Same as R17				
R63	Same as R10				
R64	Same as R17				
R65	Resistor, Fixed, Film: 120Ω, 5%, 1/8 W	1	CF1/8-120 OHMS/J	09021	
R66	Resistor, Trimmer, Film: 2 kΩ, 10%, 1/2 W	1	62PR2K	73138	
R67	Resistor, Fixed, Film: 11.5 kΩ, 1%, 1/10 W	1	RN5561152F	81349	
R68	Resistor, Fixed, Film: 270 kΩ, 5%, 1/8 W	1	CF1/8-270K/J	09021	
R69	Resistor, Fixed, Film: 30 kΩ, 5%, 1/8 W	1	CF1/8-30K/J	09021	
R70	Resistor, Trimmer, Film: 10 kΩ, 10%, 1/2 W	1	62PAR10K	73138	
R71	Resistor, Fixed, Film: 33 kΩ, 5%, 1/8 W	1	CF1/8-33K/J	09021	
R72	Same as R9				
R73	Resistor, Fixed, Film: 1.0 MΩ, 5%, 1/4 W	1	CF1/4-1.0M/J	09021	
R74	Same as R23				
R75	Same as R23				
R76	Same as R27				
R77	Same as R23				
TP1	Jack Tip: RT Angle, Brown	1	TJ202BR	49956	
TP2	Jack Tip: RT Angle, Red	1	TJ203R	49956	
TP3	Jack Tip: RT Angle, Orange	1	TJ204OR	49956	
U1	Integrated Circuit	1	LM337H	27014	
U2	Integrated Circuit	1	DG303CJ	17856	
U3	Integrated Circuit	2	DG200BA	17856	
U4	Same as U3				
U5	Integrated Circuit	3	MC3403P	04713	
U6	Same as U5				
U7	Same as U5				
U8	Integrated Circuit	1	DG301CJ	17856	
U9	Integrated Circuit	1	SN54LS145J	01295	
VR1	Voltage Regulator: 5.6 V	2	1N752A	80131	
VR2	Voltage Regulator: 5.1 V	1	1N751A	80131	
VR3	Same as VR1				

Courtesy of http://BlackRadios.terryo.org

5.5.2.7 **Type 798074-1 SSB Bypass Assembly** REF DESIG PREFIX **A3A14**

REF DESIG	DESCRIPTION	QTY PER ASSY	MANUFACTURER'S PART NO.	MFR. CODE	RECM VENDOR
R1	Resistor, Fixed, Film: 51.1Ω, 1%, 1/10 W	2	RN55C51R1F	81349	
R2	Same as R1				
R3	Resistor, Fixed, Film: 16.2Ω, 1%, 1/10 W	2	RN55D16R2F	81349	
R4	Same as R3				
R5	Resistor, Fixed, Film: 68.1Ω, 1%, 1/10 W	1	RN55C68R1F	81349	

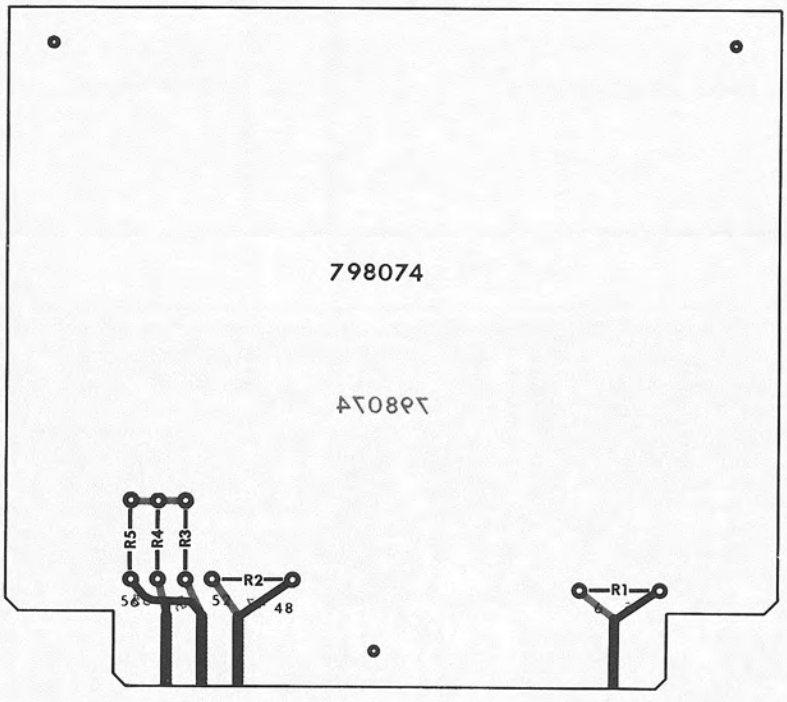

Figure 5-18. Type 798074-1 SSB Bypass Assembly (A3A14), Location of Components

Courtesy of http://BlackRadios.terryo.org

5.5.2.8 **Type 796233-1 Audio/Video/COR** REF DESIG PREFIX **A3A15**

REF DESIG	DESCRIPTION	QTY PER ASSY	MANUFACTURER'S PART NO.	MFR. CODE	RECM VENDOR
C1	Capacitor, Mica, Dipped: 20 pF, 5%, 500 V	1	CM04ED200J03	81349	
C2	Capacitor, Ceramic, Disc: 470 pF, 20%, 1000 V	2	BHD470-20PCT	91418	
C3	Capacitor, Electrolytic, Tantalum: 2.2 µF, 20%, 35 V	1	196D225X035JE3	56289	
C4	Capacitor, Ceramic, Disc: 0.01 µF, 20%, 50 V	3	34453-1	14632	
C5	Capacitor, Ceramic, Disc: 0.1 µF, 20%, 50 V	21	34475-1	14632	
C6	Same as C4				
C7	Same as C4				
C8	Capacitor, Electrolytic, Tantalum: 18 µF, ± 10%, 20 V	2	196D186X902KE3	56289	
C9	Same as C8				
C10 Thru C11	Same as C5				
C13	Capacitor, Mica, Dipped: 240 pF, 2%, 500 V	4	CM05FD241G03	81349	
C14 Thru C23	Same as C5				
C24	Same as C13				

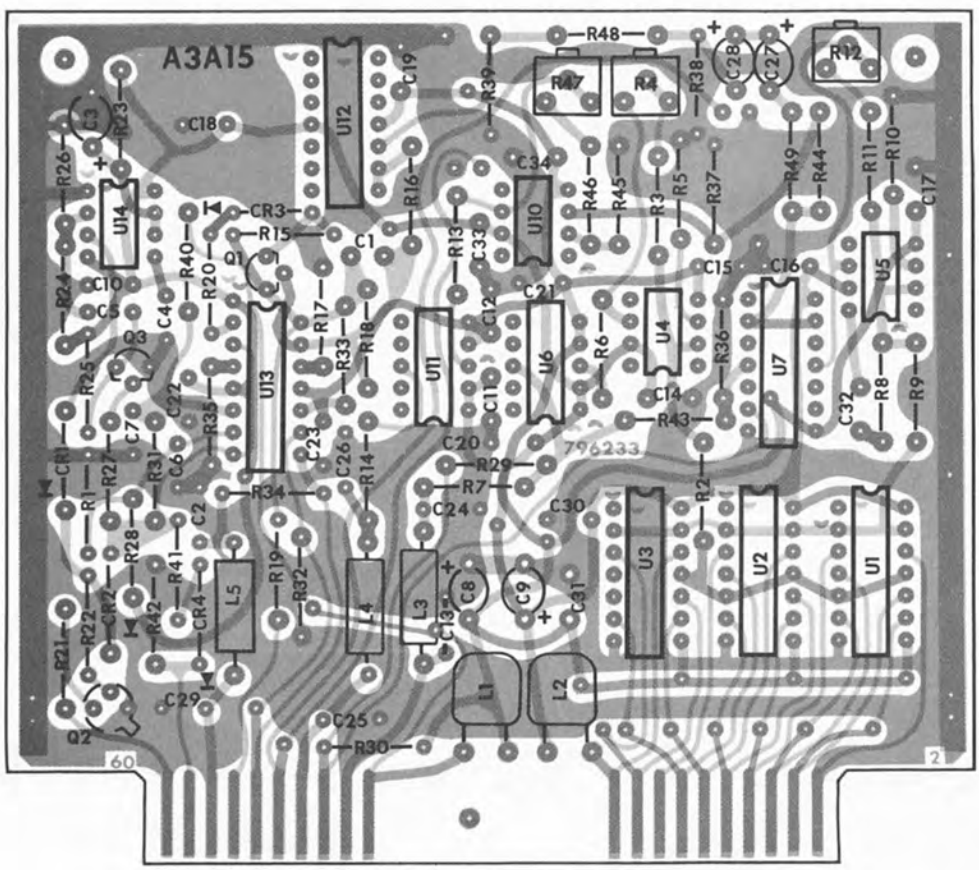

Figure 5-19. Type 796233-1 Audio/Video/COR (A3A15), Location of Components

Courtesy of http://BlackRadios.terryo.org

REF DESIG PREFIX **A3A15**

REF DESIG	DESCRIPTION	QTY PER ASSY	MANUFACTURER'S PART NO.	MFR. CODE	RECM VENDOR
C25	Same as C13				
C26	Same as C13				
C27	Capacitor, Electrolytic, Tantalum: 4.7 µF, 20%, 35 V	2	196D475X0035JE3	56289	
C28	Same as C27				
C29	Same as C2				
C30 Thru C36	Same as C5				
CR1	Diode	2	1N4449	80131	
CR2	Same as CR1				
CR3	Diode	1	1N462A	80131	
L1	Coil, Fixed: 1.2 µH, 10%	2	553-3635-38	71279	
L2	Same as L1				
L3	Coil, Fixed: 3.9 µH, 10%	2	1537-26	99800	
L4	Same as L3				
L5	Coil, Fixed: 160 µH, 5%	1	1537-86	99800	
Q1	Transistor	1	U1899E	15818	
Q2	Transistor	1	2N2222A	80131	
Q3	Transistor	1	2N3906	80131	
R1	Resistor, Fixed, Film: 2.2 kΩ, 5%, 1/4 W	1	CF1/4-2.2K/J	09021	
R2	Resistor, Fixed, Film: 470Ω, 5%, 1/4 W	4	CF1/4-470 OHMS/J	09021	
R3	Resistor, Fixed, Film: 1.0 kΩ, 5%, 1/4 W	5	CF1/4-1.0K/J	09021	
R4	Resistor, Variable, Film: 2 kΩ, 10%, 1/2 W	3	62PAR2K	73138	
R5	Same as R2				
R6	Same as R3				
R7	Resistor, Fixed, Film: 91Ω, 5%, 1/4 W	3	CF1/4-91 OHMS/J	09021	
R8	Resistor, Fixed, Film: 3.0 kΩ, 5%, 1/4 W	1	CF1/4-3.0K/J	09021	
R9	Same as R2				
R10	Resistor, Fixed, Film: 220Ω, 5%, 1/4 W	2	CF1/4-220 OHMS/J	09021	
R11	Resistor, Fixed, Film: 1.3 kΩ, 5%, 1/4 W	1	CF1/4-1.3K/J	09021	
R12	Same as R4				
R13	Resistor, Fixed, Film: 100Ω, 5%, 1/4 W	1	CF1/4-100 OHMS/J	09021	
R14	Same as R7				
R15	Resistor, Fixed, Film: 1.0 MΩ, 5%, 1/4 W	1	CF1/4-1.0M/J	09021	
R16	Resistor, Fixed, Film: 10 kΩ, 5%, 1/4 W	5	CF1/4-10K/J	09021	
R17	Resistor, Fixed, Film: 9.1 kΩ, 5%, 1/4 W	1	CF1/4-9.1K/J	09021	
R18	Resistor, Fixed, Film: 100 kΩ, 5%, 1/4 W	5	CF1/4-100K/J	09021	
R19	Resistor, Fixed, Film: 560Ω, 5%, 1/4 W	1	CF1/4-560 OHMS/J	09021	
R20	Same as R16				
R21	Resistor, Fixed, Film: 10Ω, 5%, 1/4 W	1	CF1/4-10 OHMS/J	09021	
R22	Same as R3				
R23	Resistor, Fixed, Film: 2.2 MΩ, 5%, 1/4 W	1	CF1/4-2.2M/J	09021	

Courtesy of http://BlackRadios.terryo.org

REF DESIG PREFIX **A3A15**

REF DESIG	DESCRIPTION	QTY PER ASSY	MANUFACTURER'S PART NO.	MFR. CODE	RECM VENDOR
R24	Same as R16				
R25	Same as R16				
R26	Resistor, Fixed, Film: 33 kΩ, 5%, 1/4 W	1	CF1/4-33K/J	09021	
R27	Same as R18				
R28	Resistor, Fixed, Film: 13 kΩ, 5%, 1/4 W	1	CF1/4-13K/J	09021	
R29	Resistor, Fixed, Film: 4.75 kΩ, 1%, 1/10 W	1	RN55C4751F	81349	
R30	Resistor, Fixed, Film: 178 kΩ, 1%, 1/10 W	1	RN55CC1783F	09021	
R31	Same as R18				
R32	Resistor, Fixed, Film: 2.7 kΩ, 5%, 1/4 W	1	CF1/4-2.7K/J	09021	
R33	Same as R16				
R34	Resistor, Fixed, Composition: 5.6Ω, 5%, 1/4 W	1	RCR07G5R6JS	81349	
R35	Same as R3				
R36	Resistor, Fixed, Film: 620Ω, 5%, 1/4 W	1	CF1/4-620 OHMS/J	09021	
R37	Resistor, Fixed, Film: 390Ω, 5%, 1/4 W	1	CF1/4-390 OHMS/J	09021	
R38	Same as R18				
R39	Same as R10				
R40	Same as R3				
R41	Not Used				
R42	Not Used				
R43	Resistor, Fixed, Film: 200Ω, 5%, 1/4 W	1	CF1/4-200 OHMS/J	09021	
R44	Resistor, Fixed, Film: 2.21 kΩ, 1%, 1/10 W	1	RN55C2211F	81349	
R45	Same as R2				
R46	Same as R19				
R47	Same as R4				
R48	Resistor, Fixed, Film: 1.21 kΩ, 1%, 1/10 W	1	RN55C1211F	81349	
R49	Resistor, Fixed, Film: 2.21 kΩ, 1%, 1/10 W	1	RN55C2211F	81349	
R50	Same as R7				
R51	Resistor, Fixed, Film: 470Ω, 5%, 1/8 W	1	CF1/8-470 OHMS/J	09021	
R52	Resistor, Fixed, Film: 1.21 kΩ, 1%, 1/10 W	2	RNC55H1211FM	81349	
R53	Same as R52				
S1	Dip Switch	1	78J01	81073	
U1	Integrated Circuit	3	DG302CJ	17856	
U2	Same as U1				
U3	Same as U1				
U4	Integrated Circuit	4	LM318N	27014	
U5	Same as U4				
U6	Integrated Circuit	2	LH0002CN	27014	
U7	Integrated Circuit	1	DG301CJ	17856	
U8	Not Used			18178	
U9	Not Used				
U10	Same as U4				

Courtesy of http://BlackRadios.terryo.org

REF DESIG PREFIX **A3A15**

REF DESIG	DESCRIPTION	QTY PER ASSY	MANUFACTURER'S PART NO.	MFR. CODE	RECM VENDOR
U11	Same as U6				
U12	Integrated Circuit	2	MC3403P	04713	
U13	Same as U12				
U14	Integrated Circuit	1	NE555N	18324	
U15	Same as U4				

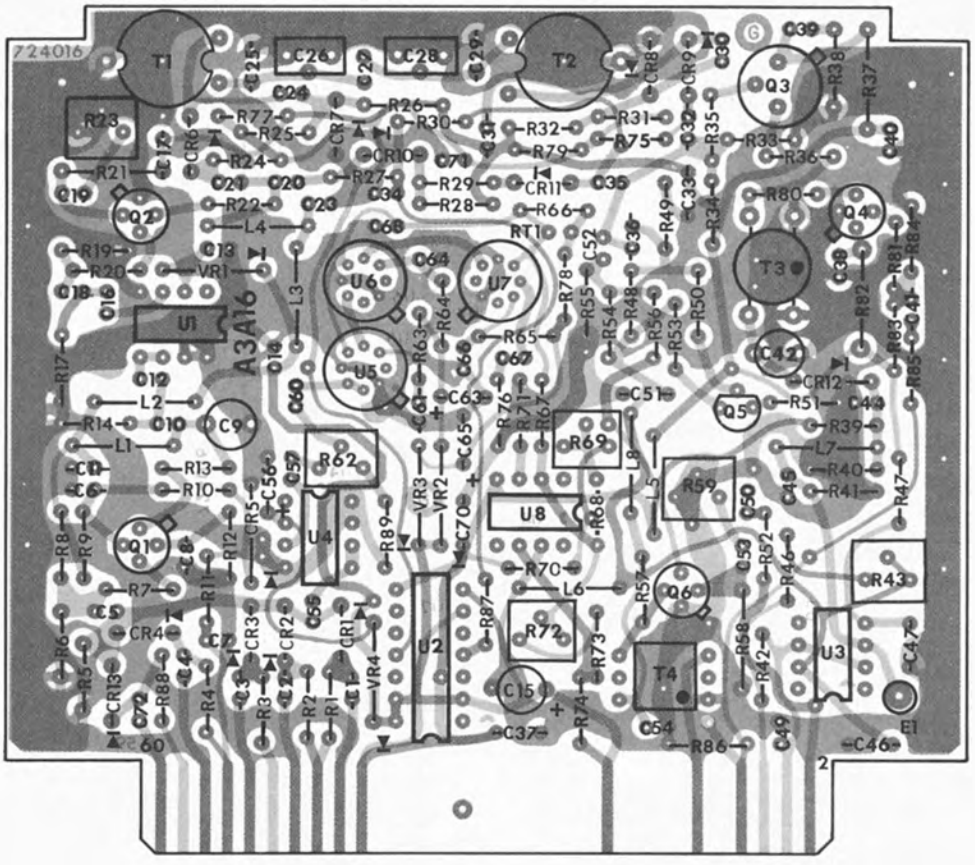

Figure 5-20. Type 724016-1 AM Demodulator/IF Output Amplifier (A3A16), Location of Components

Courtesy of http://BlackRadios.terryo.org

5.5.2.9 **Type 724016-1 AM Demodulator/IF Output Amplifier** REF DESIG PREFIX **A3A16**

REF DESIG	DESCRIPTION	QTY PER ASSY	MANUFACTURER'S PART NO.	MFR. CODE	RECM VENDOR
C1	Capacitor, Ceramic, Disc: 4700 pF, 20%, 50 V	43	8121-050-651-472M	59660	
C2 Thru C8	Same as C1				
C9	Capacitor, Variable, Ceramic: 5-25 pF, 100 V, N750	1	518-000A5-25	59660	
C10 Thru C14	Same as C1				
C15	Capacitor, Electrolytic, Tantalum: 2.2 µF, 20%, 35 V	1	196D225X0035JE3	56289	
C16 Thru C21	Same as C1				
C22	Not Used				
C23	Same as C1				
C24	Same as C1				
C25	Capacitor, Mica, Dipped: 91 pF, 2%, 500 V	2	CM04FD910G03	81349	
C26	Capacitor, Variable, Ceramic: 5-25 pF, 100 V	2	518-002A5-25	59660	
C27	Capacitor, Ceramic, Disc: 1.8 pF, ±0. pF, 100 V	1	8101-100C0K0-189B	59660	
C28	Same as C26				
C29	Same as C25				
C30 Thru C32	Same as C1				
C33	Capacitor, Ceramic, Disc: 0.01 µF, 20%, 50 V	2	34453-1	14632	
C34	Same as C1				
C35	Same as C1				
C36	Capacitor, Ceramic, Monolithic: 8.2 pF, ±.5 pF, 100 V	2	8101-100C0H0-829D	59660	
C37	Capacitor, Ceramic, Disc: 0.47 µF, 20%, 50 V	4	34452-1	14632	
C38 Thru C41	Same as C1				
C42	Capacitor, Variable, Ceramic: 1-3 pF, 100 V	1	518-000A1-3	59660	
C43	Not Used				
C44	Capacitor, Ceramic, Disc: 4.7 pF, ±.25 pF, 100 V	2	8101-100C0H0-479D	59660	
C45	Same as C44				
C46	Same as C37				
C47	Same as C37				
C48	Capacitor, Ceramic, Disc: 0.1 µF, 20%, 50 V	1	34475-1	14632	
C49	Not Used				
C50	Same as C1				
C51	Same as C33				
C52	Same as C36				
C53	Same as C1				
C54	Same as C1				

Courtesy of http://BlackRadios.terryo.org

REF DESIG PREFIX **A3A16**

REF DESIG	DESCRIPTION	QTY PER ASSY	MANUFACTURER'S PART NO.	MFR. CODE	RECM VENDOR
C55	Same as C1				
C56	Capacitor, Electrolytic, Tantalum: 22 µF, 20%, 10 V	3	196D226X0010JE3	56289	
C57	Same as C1				
C58	Not Used				
C59	Not Used				
C60	Same as C1				
C61	Same as C1				
C62	Not Used				
C63	Same as C56				
C64	Same as C1				
C65	Same as C56				
C66	Same as C1				
C67	Same as C1				
C68	Capacitor, Ceramic, Monolithic: 470 pF, 5%, 100 V	1	8121-100-C0G0-471J	59660	
C69	Not Used				
C70	Same as C37				
C71	Same as C1				
C72	Same as C1				
CR1	Diode	11	MPN3401	04713	
CR2 Thru CR4	Same as CR1				
CR5	Diode	1	1N462A	80131	
CR6 Thru CR11	Same as CR1				
CR12	Diode	1	5082-2800	28480	
CR13	Same as CR1				
L1	Coil, Fixed: 2.2 µH, 10%	1	1025-28	99800	
L2	Coil, Fixed: 27 µH, 10%	4	1025-54	99800	
L3	Same as L2				
L4	Coil, Fixed: 2.2 µH, 10%	1	1025-28	99800	
L5	Same as L2				
L6	Coil, Fixed: 18 µH, 10%	1	1025-50	99800	
L7	Coil, Fixed: 39 µH, 10%	1	1537-56	99800	
L8	Same as L2				
Q1	Transistor	1	3N211	80131	
Q2	Transistor	3	2N2857/JAN	81350	
Q3	Transistor	1	2N5109	80131	
Q4	Same as Q2				
Q5	Transistor	1	2N3904	80131	

Courtesy of http://BlackRadios.terryo.org

REF DESIG PREFIX **A3A16**

REF DESIG	DESCRIPTION	QTY PER ASSY	MANUFACTURER'S PART NO.	MFR. CODE	RECM VENDOR
Q6	Same as Q2				
R1	Resistor, Fixed, Film: 3.3 kΩ, 5%, 1/8 W	8	CF1/8-3.3K/J	09021	
R2 Thru R4	Same as R1				
R5	Resistor, Fixed, Film: 100Ω, 5%, 1/8 W	5	CF1/8-100 OHMS/J	09021	
R6	Resistor, Fixed, Film: 39 kΩ, 5%, 1/8 W	1	CF1/8-39K/J	09021	
R7	Resistor, Fixed, Film: 47Ω, 5%, 1/8 W	2	CF1/8-47 OHMS/J	09021	
R8	Resistor, Fixed, Film: 130 kΩ, 5%, 1/8 W	1	CF1/8-130K/J	09021	
R9	Resistor, Fixed, Film: 100 kΩ, 5%, 1/8 W	5	CF1/8-100K/J	09021	
R10	Resistor, Fixed, Film: 33 kΩ, 5%, 1/8 W	3	CF1/8-33K/J	09021	
R11	Resistor, Fixed, Film: 4.7 kΩ, 5%, 1/8 W	7	CF1/8-4.7K/J	09021	
R12	Resistor, Fixed, Film: 120Ω, 5%, 1/8 W	1	CF1/8-120 OHMS/J	09021	
R13	Resistor, Fixed, Film: 33Ω, 5%, 1/8 W	4	CF1/8-33 OHMS/J	09021	
R14	Resistor, Fixed, Film: 220Ω, 5%, 1/8 W	4	CF1/8-220 OHMS/J	09021	
R15	Not Used				
R16	Not Used				
R17	Resistor, Fixed, Film: 150Ω, 5%, 1/8 W	2	CF1/8-150 OHMS/J	09021	
R18	Not Used				
R19	Resistor, Fixed, Film: 6.8 kΩ, 5%, 1/8 W	3	CF1/8-6.8K/J	09021	
R20	Same as R17				
R21	Resistor, Fixed, Film: 750Ω, 5%, 1/4 W	1	CF1/4-750 OHMS/J	09021	
R22	Same as R5				
R23	Resistor, Variable, Film: 200Ω, 10%, 1/2 W	1	62PAR200	73138	
R24	Resistor, Fixed, Film: 2.7 kΩ, 5%, 1/8 W	2	CF1/8-2.7K/J	09021	
R25	Same as R10				
R26	Same as R9				
R27	Same as R1				
R28	Same as R1				
R29*	Resistor, Fixed, Composition: 300Ω, 5%, 1/8 W	1	RCR05G301JS	81349	
R30	Same as R1				
R31	Same as R10				
R32	Same as R9				
R33	Same as R11				
R34	Same as R11				
R35	Resistor, Fixed, Film: 330Ω, 5%, 1/8 W	1	CF1/8-330 OHMS/J	09021	
R36	Resistor, Fixed, Film: 22Ω, 5%, 1/8 W	1	CF1/8-22 OHMS/J	09021	
R37	Resistor, Fixed, Film: 180Ω, 5%, 1/4 W	1	CF1/8-180 OHMS/J	09021	
R38	Resistor, Fixed, Film: 39Ω, 5%, 1/8 W	1	CF1/8-39 OHMS/J	09021	
R39	Resistor, Fixed, Film: 200 kΩ, 5%, 1/8 W	1	CF1/8-200K/J	09021	
R40	Resistor, Fixed, Film: 8.2 kΩ, 5%, 1/8 W	3	CF1/8-8.2K/J	09021	

Courtesy of http://BlackRadios.terryo.org

REF DESIG PREFIX **A3A16**

REF DESIG	DESCRIPTION	QTY PER ASSY	MANUFACTURER'S PART NO.	MFR. CODE	RECM VENDOR
R41	Same as R40				
R42	Resistor, Fixed, Composition: 470Ω, 5%, 1/8 W	3	RCR05G471JS	81349	
R43	Resistor, Trimmer, Film: 50 kΩ, 10%, 1/2 W	1	62PR50K	73138	
R44	Resistor, Fixed, Film: 10 k, 5%, 1/8 W	2	CF1/8-10K/J	09021	
R45	Same as R5				
R46	Resistor, Fixed, Film: 18 kΩ, 5%, 1/8 W	1	CF1/8-18K/J	09021	
R47	Same as R7				
R48	Same as R44				
R49	Same as R19				
R50	Same as R5				
R51	Same as R42				
R52	Same as R13				
R53	Same as R5				
R54	Same as R19				
R55	Resistor, Fixed, Film: 22 kΩ, 5%, 1/8 W	1	CF1/8-22K/J	09021	
R56	Resistor, Fixed, Film: 1.2 kΩ, 5%, 1/8 W	1	CF1/8-1.2K/J	09021	
R57	Same as R14				
R58	Resistor, Fixed, Film: 1.0 k, 5%, 1/4 W	1	CF1/4-1.0K/J	09021	
R59	Resistor, Variable, Film: 500Ω, 10%, 1/2 W	1	62PAR500	73138	
R60	Not Used				
R61	Not Used				
R62	Resistor, Variable, Film: 1 kΩ, 10%, 1/2 W	1	62PAR1K	73138	
R63	Resistor, Fixed, Film: 10Ω, 5%, 1/8 W	3	CF1/8-10 OHMS/J	09021	
R64	Same as R63				
R65	Same as R63				
R66	Same as R14				
R67	Same as R11				
R68	Resistor, Fixed, Film: 910Ω, 5%, 1/8 W	1	CF1/8-910 OHMS/J	09021	
R69	Resistor, Variable, Film: 5 kΩ, 10%, 5 W	1	62PAR5K	73138	
R70	Same as R40				
R71	Resistor, Fixed, Film: 2.2 kΩ, 5%, 1/8 W	1	CF1/8-2.2K/J	09021	
R72	Resistor, Variable, Film: 10 kΩ, 10%, 1/2 W	1	62PAR10K	73138	
R73	Resistor, Fixed, Composition: 11 kΩ, 5%, 1/8 W	1	RCR05G113JS	81349	
R74	Same as R13				
R75	Same as R24				
R76	Same as R11				
R77	Same as R9				
R78	Resistor, Fixed, Film: 360Ω, 5%, 1/8 W	1	CF1/8-360 OHMS/J	09021	
R79	Same as R9				
R80	Same as R13				
R81	Same as R42				

Courtesy of http://BlackRadios.terryo.org

REF DESIG PREFIX **A3A16**

REF DESIG	DESCRIPTION	QTY PER ASSY	MANUFACTURER'S PART NO.	MFR. CODE	RECM VENDOR
R82	Resistor, Fixed, Film: 330Ω, 5%, 1/4 W	1	CF1/4-330 OHMS/J	09021	
R83	Same as R11				
R84	Same as R11				
R85	Same as R14				
R86	Resistor, Fixed, Film: 56Ω, 5%, 1/8 W	1	CF1/8-56 OHMS/J	09021	
R87	Resistor, Fixed, Film: 680Ω, 5%, 1/8 W	1	CF1/8-680 OHMS/J	09021	
R88	Same as R1				
R89	Resistor, Fixed, Film: 510Ω, 5%, 1/8 W	1	CF1/8-510 OHMS/J	09021	
RT1	Resistor, Thermal: 1 kΩ	1	2D102	04239	
T1	Transformer	2	390452-1	14632	
T2	Same as T1				
T3	Transformer	1	22295-71	14632	
T4	Transformer	1	T4-1	15542	
U1	Integrated Circuit	2	SL1611C	52648	
U2	Integrated Circuit	1	DG301CJ	17856	
U3	Integrated Circuit	2	LM318N	27014	
U4	Same as U1				
U5	Integrated Circuit	3	SL521C	52648	
U6	Same as U5				
U7	Same as U5				
U8	Same as U3				
VR1	Voltage Regulator: 8.2 V	4	1N756A	80131	
VR2 Thru VR4	Same as VR1				

*Nominal Value, Final Value Factory Selected

Courtesy of http://BlackRadios.terryo.org

5.5.3 TYPE 798071-1 SYNTHESIZER MOTHERBOARD

REF DESIG PREFIX A4

REF DESIG	DESCRIPTION	QTY PER ASSY	MANUFACTURER'S PART NO.	MFR. CODE	RECM VENDOR
A1	Reference Generator	1	798028-2	14632	
A2	1st LO Synthesizer	1	778001-2	14632	
A3	Translation Oscillator	1	778002-1	14632	
A4	4.4 - 5.4 MHz Synthesizer	1	776002-1	14632	
A5	SSB BFO	1	794195-1	14632	
A6	535 MHz Generator	1	798043-1	14632	
C1	Capacitor, Ceramic, Disc: .01 µF, 20%, 100 V	60	8121-100-651-103M	59660	
C2 Thru C58	Same as C1				
C59	Capacitor, Ceramic, Disc: .01 µF, 20%, 50 V	9	34453-1	14632	
C60 Thru C62	Same as C59				
C63	Capacitor, Electrolytic, Tantalum: 100 µF, 20%, 35 V	4	MTP107M035P1C	76055	
C64 Thru C66	Same as C63				
C67	Same as C59				
C68	Capacitor, Electrolytic, Tantalum: 10 µF, 20%, 30 V	3	MTP106M030P1A	76055	
C69	Same as C59				
C70	Same as C68				
C71	Same as C59				
C72	Same as C68				
C73	Same as C59				
C74	Same as C59				
C75	Capacitor, Ceramic, Disc: .047 µF, 10%, 100 V	1	8121-100X7RO-473K	59660	
C76	Same as C1				
C77	Same as C1				
CR1	Diode	2	1N4449	80131	
CR2	Same as CR1				
J1	Connector, Receptacle	4	118470-8	00779	
J2	Same as J1				
J3	Same as J1				
J4	Connector, Receptacle	2	1-118470-0	00779	
P1	Flex Cable	1	34832-2	14632	
P2	Flex Cable	1	34832-1	14632	
P3	Connector, Plug	1	87499-5	00779	
P4	Connector, Plug	2	50-328-3875-91	98291	
P5	Same as P4				
P6	Connector, Plug	3	50-024-3875-91	98291	
P7	Same as P6				

Courtesy of http://BlackRadios.terryo.org

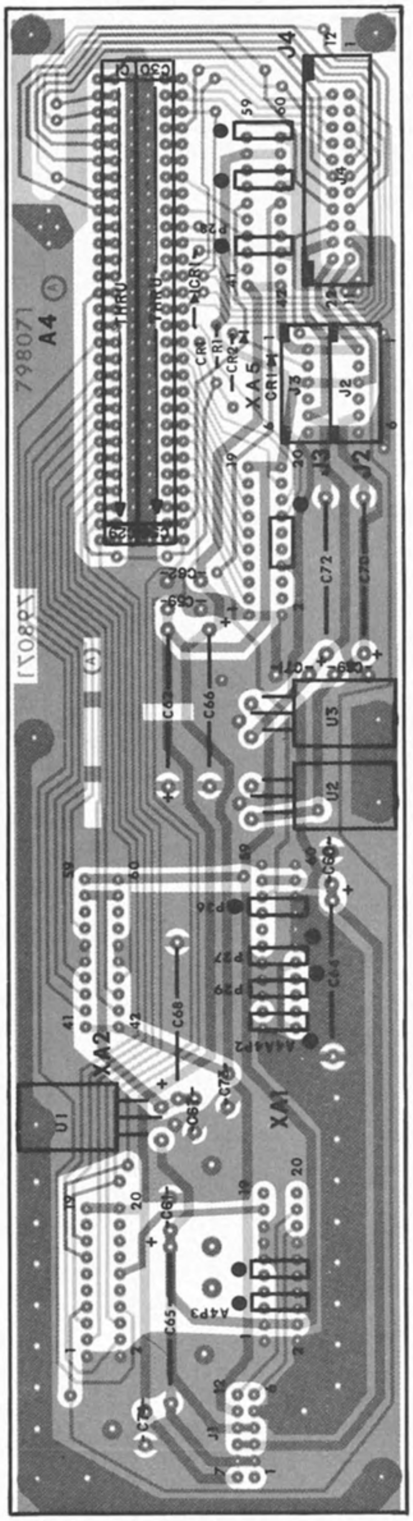

Figure 5-21. Type 798071 Synthesizer Motherboard (A4), Location of Components

Courtesy of http://BlackRadios.terryo.org

REF DESIG PREFIX A4

REF DESIG	DESCRIPTION	QTY PER ASSY	MANUFACTURER'S PART NO.	MFR. CODE	RECM VENDOR
P8	Same as P6				
R1	Resistor, Fixed, Film: 22 kΩ, 5%, 1/8 W	1	CF1/8-22K/J	09021	
R2	Resistor, Fixed, Film: 2.2. kΩ, 5%, 1/8 W	1	CF1/8-2.2K/J	09021	
U1	Voltage Regulator: SV, 1A	3	LM340AT-5.0	27014	
U2	Same as U1				
U3	Same as U1				
W1	Cable Assembly	1	380260-8	14632	
W2	Cable Assembly	1	380259-17	14632	
W3	Cable Assembly	1	380259-18	14632	
XA1	Connector	1	MK30C-13-195-4381D	81312	
XA2	Connector	2	MK30C-13-195-4381	81312	
XA3	Not Used				
XA4	Not Used				
XA5	Same as XA2				

Courtesy of http://BlackRadios.terryo.org

5.5.3.1 Type 798028-2 Reference Generator

REF DESIG PREFIX **A4A1**

REF DESIG	DESCRIPTION	QTY PER ASSY	MANUFACTURER'S PART NO.	MFR. CODE	RECM VENDOR
C1	Capacitor, Ceramic, Disc: 0.1 µF, 20%, 50 V	2	34475-1	14632	
C2	Capacitor, Mica, Dipped: 820 pF, 5%, 300 V	1	DM15-821J	72136	
C3	Capacitor, Ceramic, Disc: 0.01 µF, 20%, 50 V	10	34453-1	14632	
C4	Capacitor, Ceramic, Disc: 1000 pF, 500 V	1	B-GP1000PFP	91418	
C5	Capacitor, Mica, Dipped: 1000 pF, 5%, 100 V	1	DM15-102J	72136	
C6	Same as C3				
C7	Capacitor, Ceramic, Disc: .47 µF, 20%, 50 V	2	34452-1	14632	
C8	Same as C3				
C9	Capacitor, Electrolytic, Tantalum: 22 µF, 20%, 15 V	2	196D226X0015KE3	56289	
C10	Same as C9				
C11	Same as C3				
C12	Same as C1				
C13	Same as C7				
C14	Same as C3				
C15	Capacitor, Variable, Ceramic: 2-8 pF, 350 V	1	538-006A2-8	59660	

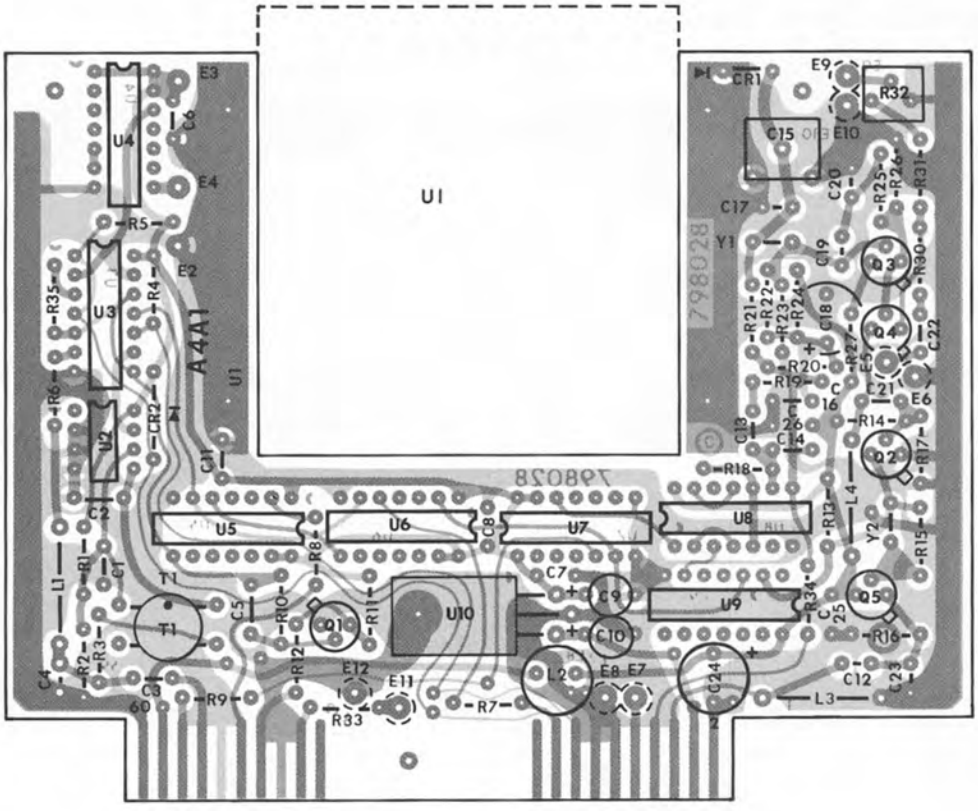

Figure 5-22. Type 798028-2 Reference Generator (A4A1), Location of Components

Courtesy of http://BlackRadios.terryo.org

REF DESIG PREFIX **A4A1**

REF DESIG	DESCRIPTION	QTY PER ASSY	MANUFACTURER'S PART NO.	MFR. CODE	RECM VENDOR
C16	Same as C3				
C17	Capacitor, Mica, Dipped: 12 pF, 10%, 500 V	1	CM04CD120J03	11139	
C18	Capacitor, Electrolytic, Tantalum: 220 µF, 20%, 10 V	2	196D227X0010TE4	56289	
C19	Capacitor, Mica, Dipped: 220 pF, 2%, 500 V	2	CM04FD221G03	81349	
C20	Same as C19				
C21	Same as C3				
C22	Same as C3				
C23	Capacitor, Mica, Dipped: 910 pF, 5%, 100 V	1	DM15-911J	72136	
C24	Same as C18				
C25	Same as C3				
C26	Same as C3				
CR1	Diode	1	U11-3102	52673	
CR2	Diode	1	1N4446	80131	
L1	Coil, Fixed: 8.2 µH, 10%	1	1537-34	99800	
L2	Coil, Fixed: 100 µH, 10%	1	553-3635-25	71279	
L3	Coil, Fixed: .22 µH	1	1537-2	99800	
L4	Coil, Fixed: 15 µH, 10%	1	1537-40	99800	
L5	Coil, Fixed: 10 µH, 10%	1	1537-36	99800	
Q1	Transistor	5	2N2222A	80131	
Q2 Thru Q5	Same as Q1				
R1	Resistor, Fixed, Composition: 5.6 kΩ, 5%, 1/8 W	2	RCR05G562JS	81349	
R2	Same as R1				
R3	Resistor, Fixed, Film: 47Ω, 5%, 1/8 W	3	CF1/8-47 OHMS/J	09021	
R4	Resistor, Fixed, Film: 1 kΩ, 5%, 1/8 W	5	CF1/8-1K/J	09021	
R5	Same as R4				
R6	Resistor, Fixed, Film: 100Ω, 5%, 1/8 W	3	CF1/8-100 OHMS/J	09021	
R7	Resistor, Fixed, Film: 120Ω, 5%, 1/8 W	3	CF1/8-120 OHMS/J	09021	
R8	Same as R7				
R9	Same as R7				
R10	Resistor, Fixed, Film: 2.7 kΩ, 5%, 1/8 W	1	CF1/8-2.7K/J	09021	
R11	Resistor, Fixed, Film: 270Ω, 5%, 1/8 W	2	CF1/8-270 OHMS/J	09021	
R12	Resistor, Fixed, Film: 22Ω, 5%, 1/8 W	2	CF1/8-22 OHMS/J	09021	
R13	Same as R6				
R14	Resistor, Fixed, Film: 18 kΩ, 5%, 1/8 W	1	CF1/8-18K/J	09021	
R15	Resistor, Fixed, Film: 10 kΩ, 5%, 1/8 W	4	CF1/8-10K/J	09021	
R16	Resistor, Fixed, Film: 150Ω, 5%, 1/8 W	1	CF1/8-150 OHMS/J	09021	
R17	Resistor, Fixed, Film: 2 kΩ, 5%, 1/8 W	1	CF1/8-2K/J	09021	
R18	Resistor, Fixed, Film: 22 kΩ, 5%, 1/8 W	1	CF1/8-22K/J	09021	
R19	Resistor, Fixed, Composition: 5.1 kΩ, 5%, 1/8 W	1	RCR05G512JS	81349	
R20	Same as R4				

Courtesy of http://BlackRadios.terryo.org

REF DESIG PREFIX **A4A1**

REF DESIG	DESCRIPTION	QTY PER ASSY	MANUFACTURER'S PART NO.	MFR. CODE	RECM VENDOR
R21	Same as R15				
R22	Same as R4				
R23	Same as R15				
R24	Resistor, Fixed, Film: 220Ω, 5%, 1/8 W	1	CF1/8-220 OHMS/J	09021	
R25	Resistor, Fixed, Film: 27Ω, 5%, 1/8 W	1	CF1/8-27 OHMS/J	09021	
R26	Same as R11				
R27	Same as R12				
R28	Not Used				
R29	Not Used				
R30	Resistor, Fixed, Composition: 470Ω, 5%, 1/8 W	1	RCR05G471JS	81349	
R31	Same as R6				
R32	Resistor, Variable, Film: 100Ω, 10%, 1/2 W	1	62PAR100	73138	
R33	Same as R4				
R34	Same as R15				
R35	Resistor, Fixed, Film: 56Ω, 5%, 1/8 W	1	CF1/8-56 OHMS/J	09021	
T1	Transformer	1	22295-68	14632	
U1	Oscillator/10 MHz	1	841046	14632	
U2	Integrated Circuit	1	SN75140N	01295	
U3	Integrated Circuit	1	SN74125N	01295	
U4	Integrated Circuit	2	SN74LS196N	01295	
U5	Integrated Circuit	2	SN74LS197N	01295	
U6	Same as U5				
U7	Same as U4				
U8	Integrated Circuit	1	MC4044P	04713	
U9	Integrated Circuit	1	SN74LS74N	01295	
U10	Voltage Regulator: 5 V, 1A	1	7805UC	07263	
Y1	Crystal, Quartz: 10.7 MHz	2	CR64U10.7 MHz	80058	
Y2	Same as Y1				

Courtesy of http://BlackRadios.terryo.org

5.5.3.2 **Type 778001-2 1st LO Synthesizer** REF DESIG PREFIX **A4A2**

REF DESIG	DESCRIPTION	QTY PER ASSY	MANUFACTURER'S PART NO.	MFR. CODE	RECM VENDOR
A1	1st LO Synthesizer VCO	1	390361-1	14632	
A2	Diode Control Assembly	1	290443-1	14632	
C1	Capacitor, Electrolytic, Tantalum: 100 µF, 20%, 35 V	2	MTP107M035P1C	76055	
C2	Same as C1				
C3	Capacitor, Ceramic, Disc: .1 µF, 20%, 50 V	3	34475-1	14632	
C4	Capacitor, Electrolytic, Tantalum: 22 µF, 10%, 15 V	1	CS13BD226K	81349	
C5	Capacitor, Ceramic, Disc: 5000 pF, 20%, 100 V	2	C023B101E502M	56289	
C6	Same as C3				
C7	Same as C3				
C8	Capacitor, Ceramic, Disc: .047 µF, 10%, 50 V	2	CK05BX473K	81349	
C9	Capacitor, Ceramic, Disc: .01 µF, 10%, 200 V	2	CK06BX103K	81349	
C10	Capacitor, Ceramic, Disc: .015 µF, 10%, 100 V	1	CK06BX153K	81349	
C11	Same as C9				
C12	Capacitor, Ceramic, Disc: .47 µF, 20%, 50 V	2	34452-1	14632	
C13	Capacitor, Ceramic, Disc: .01 µF, 20%, 50 V	8	34453-1	14632	
C14	Capacitor, Mica, Dipped: 150 pF, 2%, 500 V	1	CM05FD151G03	81349	
C15 Thru C21	Same as C13				
C22	Capacitor, Electrolytic, Tantalum: 15 µF, 20%, 15 V	1	196D156X0015JE3	56289	
C23	Same as C5				
C24	Same as C8				
C25	Same as C12				
C26	Capacitor, Ceramic, Disc: 470 pF, 20%, 1000 V	1	BHO470-20PCT	91418	
C27	Capacitor, Mica, Dipped: 47 pF, 2%, 500 V	1	CM05ED470G03	81349	
CR1	Diode	5	1N4449	80131	
CR2	Diode	7	5082-2800	28480	
CR3 Thru CR5	Same as CR2				
CR6	Not Used				
CR7	Not Used				
CR8	Same as CR2				
CR9	Same as CR2				
CR10	Same as CR1				
CR11	Diode	1	1N995	80131	
CR12	Not Used				
CR13	Not Used				
CR14	Same as CR2				
CR15 Thru CR17	Same as CR1				

Courtesy of http://BlackRadios.terryo.org

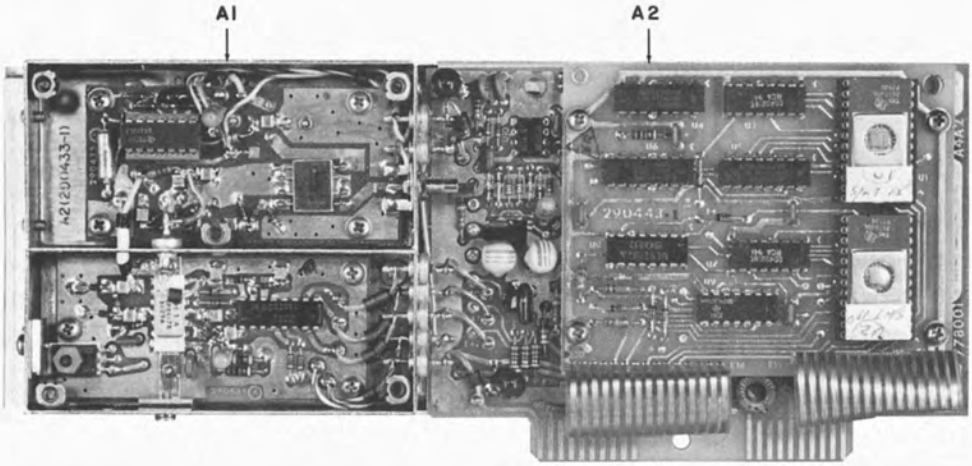

Figure 5-23. Type 778001-2 1st LO Synthesizer (A4A2), Top View, Location of Components

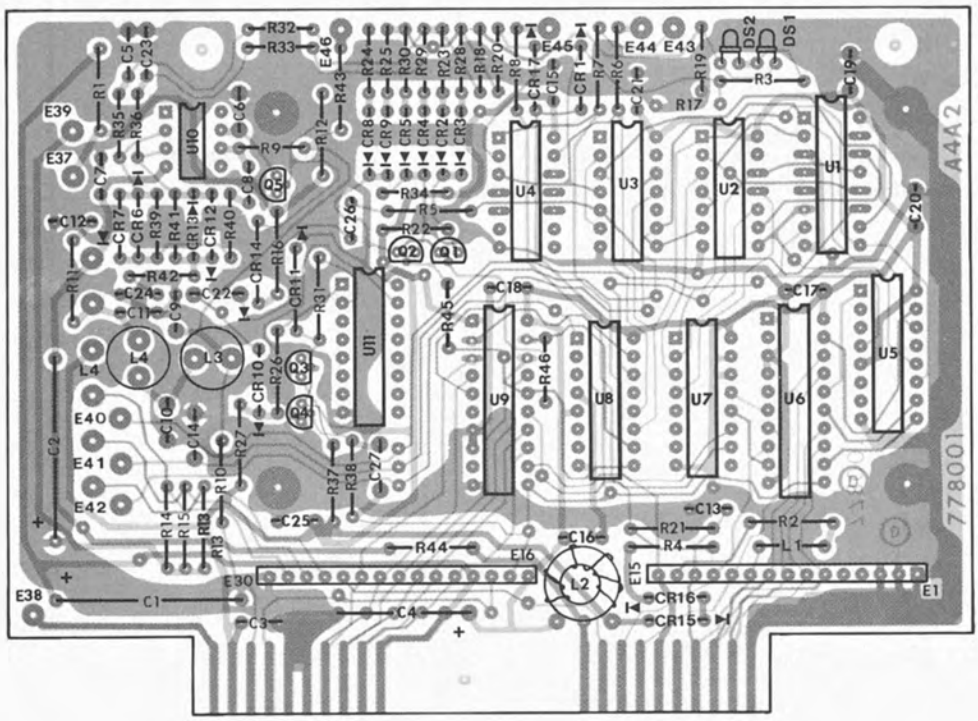

Figure 5-24. Type 778001-2 1st LO Synthesizer (A4A2), Location of Components

Courtesy of http://BlackRadios.terryo.org

REF DESIG PREFIX **A4A2**

REF DESIG	DESCRIPTION	QTY PER ASSY	MANUFACTURER'S PART NO.	MFR. CODE	RECM VENDOR
DS1	Diode: LED	2	HLMP-1301	28480	
DS2	Same as DS1				
FB1	Ferrite Bead	8	56-590-65-4A	02114	
FB2 Thru FB6	Same as FB1				
FB7	Not Used				
FB8	Same as FB1				
FB9	Same as FB1				
L1	Coil, Fixed	1	16209-4	14632	
L2	Coil, Fixed, Toroid	1	20681-180	14632	
L3	Coil, Fixed: 2.2 mH, 10%	2	553-3635-41	71279	
L4	Same as L3				
L5	Coil, Fixed: 47 μH	1	1537-60	99800	
Q1	Transistor	3	2N3904	80131	
Q2	Same as Q1				
Q3	Transistor	2	2N3906	80131	
Q4	Same as Q1				
Q5	Same as Q3				
R1	Resistor, Fixed, Film: 2.7Ω, 5%, 1/4 W	1	CF1/4-2.7 OHMS/J	09021	
R2	Resistor, Fixed, Film: 100Ω, 5%, 1/4 W	2	CF1/4-100 OHMS/J	09021	
R3	Resistor, Fixed, Film: 330Ω, 5%, 1/4 W	1	CF1/4-330 OHMS/J	09021	
R4	Resistor, Fixed, Film: 4.7 kΩ, 5%, 1/4 W	6	CF1/4-4.7K/J	09021	
R5	Resistor, Fixed, Film: 470Ω, 5%, 1/4 W	7	CF1/4-470 OHMS/J	09021	
R6 Thru R9	Same as R5				
R10	Resistor, Fixed, Film: 10 kΩ, 5%, 1/4 W	3	CF1/4-10K/J	09021	
R11	Same as R5				
R12	Same as R10				
R13	Resistor, Fixed, Film: 3.3 kΩ, 5%, 1/4 W	3	CF1/4-3.3K/J	09021	
R14	Same as R13				
R15	Same as R13				
R16	Same as R10				
R17	Resistor, Fixed, Film: 4.7 kΩ, 5%, 1/8 W	4	C3-4.7K-5PCT	24546	
R18	Resistor, Fixed, Film: 1 kΩ, 5%, 1/8 W	8	C3-1K-5PCT	24546	
R19	Same as R17				
R20	Same as R18				
R21	Resistor, Fixed, Film: 1.0 kΩ, 1%, 1/10 W	1	RN55C1001F	81349	
R22	Same as R17				
R23	Resistor, Fixed, Film: 200Ω, 5%, 1/8 W	2	C3-200R-5PCT	24546	
R24	Resistor, Fixed, Film: 100Ω, 5%, 1/8 W	2	C3-100R-5PCT	24546	
R25	Same as R24				

Courtesy of http://BlackRadios.terryo.org

REF DESIG PREFIX **A4A2**

REF DESIG	DESCRIPTION	QTY PER ASSY	MANUFACTURER'S PART NO.	MFR. CODE	RECM VENDOR
R26	Resistor, Fixed, Film: 15 kΩ, 5%, 1/4 W	1	CF1/4-15K/J	09021	
R27	Same as R4				
R28	Same as R23				
R29	Resistor, Fixed, Film: 390Ω, 5%, 1/8 W	2	C3-390R-5PCT	24546	
R30	Same as R29				
R31	Same as R4				
R32	Same as R18				
R33	Same as R18				
R34	Same as R17				
R35	Same as R18				
R36	Same as R18				
R37	Resistor, Fixed, Film: 270Ω, 5%, 1/4 W	1	CF1/4-270 OHMS/J	09021	
R38	Same as R4				
R39	Resistor, Fixed, Film: 15 kΩ, 5%, 1/8 W	2	C3-15K-5PCT	24546	
R40	Same as R18				
R41	Same as R39				
R42	Same as R18				
R43	Same as R5				
R44	Same as R2				
R45	Same as R4				
R46	Same as R4				
U1	Integrated Circuit	1	MC12014L	04713	
U2	Integrated Circuit	1	SN74LS196N	01295	
U3	Integrated Circuit	1	SN74S74N	01295	
U4	Integrated Circuit	1	MC4044P	04713	
U5	Integrated Circuit	2	SN74LS190N	01295	
U6	Integrated Circuit	2	MM74C374N	27014	
U7	Integrated Circuit	1	841050	14632	
U8	Same as U5				
U9	Same as U6				
U10	Integrated Circuit	1	NE5534	18324	
U11	Integrated Circuit	1	ULN2003A	56289	

Courtesy of http://BlackRadios.terryo.org

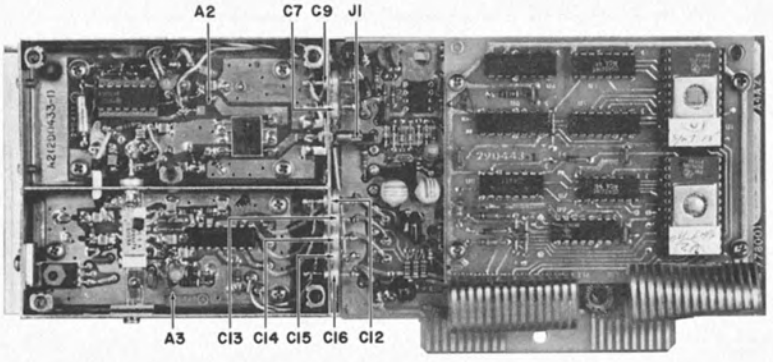

Figure 5-25. Part 390361-1 1st LO Synthesizer VCO, (A4A2A1), Top View, Location of Components

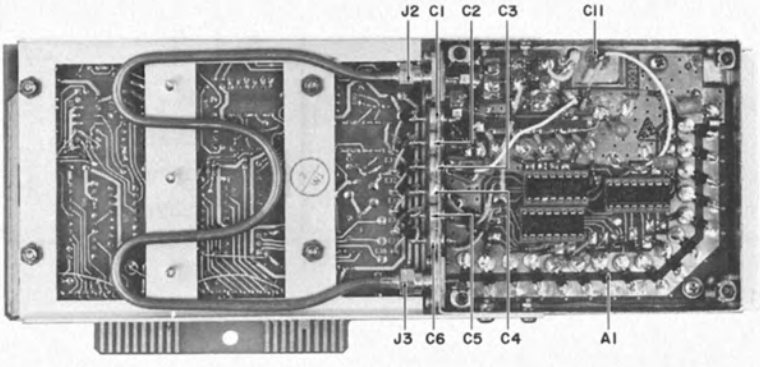

Figure 5-26. Part 390361-1 1st LO Synthesizer VCO, (A4A2A1) Bottom View, Location of Components

Courtesy of http://BlackRadios.terryo.org

5.5.3.2.1 **Part 390361-1 1st LO Synthesizer VCO** REF DESIG PREFIX **A4A2A1**

REF DESIG	DESCRIPTION	QTY PER ASSY	MANUFACTURER'S PART NO.	MFR. CODE	RECM VENDOR
A1	VCO	1	390360-1	14632	
A2	Buffer	1	290433-1	14632	
A3	Prescaler	1	290434-1	14632	
C1	Capacitor, Modified	6	33728-5	14632	
C2 Thru C6	Same as C1				
C7	Capacitor, Ceramic, Feedthru: 330 pF, 10%, 500 V	6	54-794-001-3311	33095	
C8 Thru C11	Same as C7				
C12	Capacitor, Ceramic, Feedthru: 33 pF, 10%, 500 V	3	54-794-001-3301	33095	
C13	Same as C12				
C14	Same as C12				
C15	Same as C7				
C16	Capacitor, Electrolytic, Tantalum: 47 µF, 20%, 20 V	1	196D476X0020PE4	56289	
FB1	Ferrite Bead	15	56-590-65-4A	02114	
FB2 Thru FB15	Same as FB1				
J1	Connector, Receptacle	1	UG1619	80058	
J2	Connector, Receptacle	2	244-2	16179	
J3	Same as J2				
P1	Connector, Plug	2	201-1A	16179	
P2	Same as P1				
R1	Resistor, Fixed, Film: 4.7 kΩ, 5%, 1/8 W	1	C3-4.7K-5PCT	24546	
R2	Resistor, Fixed, Film: 470Ω, 5%, 1/8 W	1	C3-470R-5PCT	24546	
R3	Resistor, Fixed, Film: 22Ω, 5%, 1/8 W	1	C3-22R-5PCT	24546	
W1	Cable Assembly	1	280218-1	14632	

Courtesy of http://BlackRadios.terryo.org

5.5.3.2.1.1 **Part 390360-1 VCO** REF DESIG PREFIX **A4A2A1A1**

REF DESIG	DESCRIPTION	QTY PER ASSY	MANUFACTURER'S PART NO.	MFR. CODE	RECM VENDOR
C1	Capacitor, Ceramic, Chip: 330 pF, 10%, 200 V	2	ATC700B331KP200X	29990	
C2	Capacitor, Ceramic, Chip: 200 pF, ±20%, 500 V	25	603P201	91984	
C3	Capacitor, Ceramic, Chip: 4.7 pF, ±.1 pF, 500 V	1	ATC100B4R7BP500X	29990	
C4	Not Used				
C5	Capacitor, Electrolytic, Tantalum: 4.7 µF, 20%, 35 V	1	196D475X0035JE3	56289	
C6	Capacitor, Ceramic, Disc: .01 µF, 20%, 50 V	3	34453-1	14632	
C7	Same as C1				
C8	Capacitor, Ceramic, Chip: 24 pF, 5%, 500 V	1	ATC700B240JP500X	29990	
C9	Same as C2				
C10	Same as C6				
C11 Thru C14	Same as C2				
C15	Same as C6				
C16 Thru C32	Same as C2				
C33	Capacitor, Electrolytic, Tantalum: 22 µF, 20%, 15 V	3	196D226X0015KE3	56289	
C34	Same as C33				
C35	Same as C2				

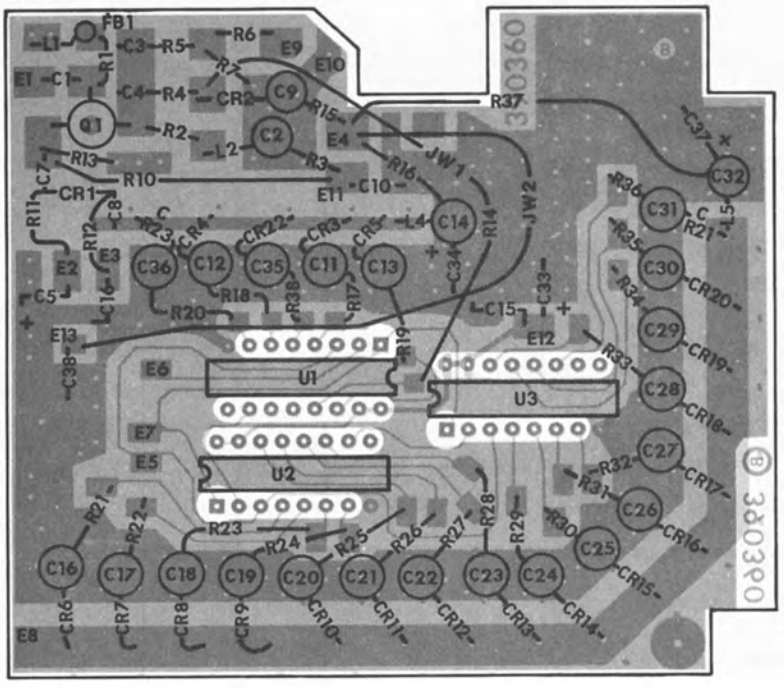

Figure 5-27. Part 390360-1 1st LO Synthesizer VCO (A4A2A1A1), Location of Components

Courtesy of http://BlackRadios.terryo.org

REF DESIG PREFIX **A4A2A1A1**

REF DESIG	DESCRIPTION	QTY PER ASSY	MANUFACTURER'S PART NO.	MFR. CODE	RECM VENDOR
C36	Same as C2				
C37	Same as C33				
C38	Capacitor, Ceramic, Disc: .47 µF, 20%, 50 V	1	34452-1	14632	
C39	Capacitor, Ceramic, Chip: 2.1 pF, ±.01 pF, 500 V	1	ATC700B2R1BP500X	29990	
CR1	Diode	1	U11-3102	52673	
CR2	Not Used				
CR3	Diode, Pin	22	KS3542	52673	
CR4 Thru CR24	Same as CR3				
FB1	Ferrite Bead	1	56-590-65-4A	02114	
L1	Coil, Fixed	1	180067-1	14632	
L2	Coil, Fixed	1	22292-120	14632	
L3	Not Used				
L4	Inductor	1	180066-1	14632	
L5	Inductor	1	180065-1	14632	
Q1	Transistor	1	841269	14632	
R1	Resistor, Fixed, Film: 180Ω, 5%, 1/8 W	1	C3-180R-5PCT	24546	
R2	Resistor, Fixed, Film: 100Ω, 5%, 1/8 W	4	C3-100R-5PCT	24546	
R3	Same as R2				
R4	Not Used				
R5	Resistor, Fixed, Film: 15Ω, 5%, 1/8 W	2	C3-15R-5PCT	24546	
R6	Same as R5				
R7	Resistor, Fixed, Film: 68Ω, 5%, 1/8 W	1	C3-68R-5PCT	24546	
R8	Not Used				
R9	Not Used				
R10	Resistor, Fixed, Film: 8.2 kΩ, 5%, 1/8 W	1	C3-8.2K-5PCT	24546	
R11	Resistor, Fixed, Film: 27 kΩ, 5%, 1/8 W	1	C3-27K-5PCT	24546	
R12	Resistor, Fixed, Film: 47 kΩ, 5%, 1/8 W	1	C3-47K-5PCT	24546	
R13	Resistor, Fixed, Film: 4.3 kΩ, 5%, 1/8 W	1	C3-4.3K-5PCT	24546	
R14	Not Used				
R15	Same as R2				
R16	Same as R2				
R17	Resistor, Fixed, Film: 1 kΩ, 5%, 1/8 W	22	C3-1K-5PCT	24546	
R18 Thru R36	Same as R17				
R37	Resistor, Fixed, Film: 27Ω, 5%, 1/8 W	1	C3-27R-5PCT	24546	
R38	Same as R17				
R39	Same as R17				
U1	Integrated Circuit	3	CD4094BE	02735	
U2	Same as U1				
U3	Same as U1				

Courtesy of http://BlackRadios.terryo.org

5.5.3.2.1.2 **Part 290433-1 Buffer** REF DESIG PREFIX **A4A2A1A2**

REF DESIG	DESCRIPTION	QTY PER ASSY	MANUFACTURER'S PART NO.	MFR. CODE	RECM VENDOR
C1	Capacitor, Electrolytic, Tantalum: 10 µF, 10%, 20 V	1	CS13BE106K	81349	
C2	Capacitor, Ceramic, Chip: 470 pF, 10%, 100 V	6	C1210E471K1GAH	31433	
C3	Capacitor, Mica, Dipped: 1000 pF, 5%, 100 V	1	DM15-102J	72136	
C4 Thru C8	Same as C2				
C9	Capacitor, Electrolytic, Tantalum: 18 µF, 10%, 20 V	2	196D186X9020KE3	56289	
C10	Same as C9				
FB1	Ferrite Bead	4	56-590-65-4A	02114	
FB2 Thru FB4	Same as FB1				
L1	Coil, Fixed	1	180064-1	14632	
R1	Resistor, Fixed, Film: 4.7 kΩ, 5%, 1/8 W	2	C3-4.7K-5PCT	24546	
R2	Same as R1				
R3 Thru R5	Not Used				
R6	Resistor, Fixed, Film: 100Ω, 5%, 1/8 W	6	CF1/8-100 OHMS/J	09021	
R7	Same as R6				
R8	Resistor, Fixed, Film: 68Ω, 5%, 1/8 W	2	CF1/8-68 OHMS/J	09021	
R9 Thru R11	Same as R6				
R12	Same as R8				
R13	Same as R6				
R14	Resistor, Fixed, Film: 6.8 kΩ, 5%, 1/8 W	1	C3-6.8K-5PCT	24546	
R15	Resistor, Fixed, Film: 6.8Ω, 5%, 1/8 W	1	CF1/8-6.8 OHMS/J	09021	
U1	Integrated Circuit	1	723DC	07263	
U2	Amplifier	1	A65	27956	
U3	Power Divider	1	PDF-2A-550	12475	
U4	Integrated Circuit	2	MWA320	04713	
U5	Same as U4				

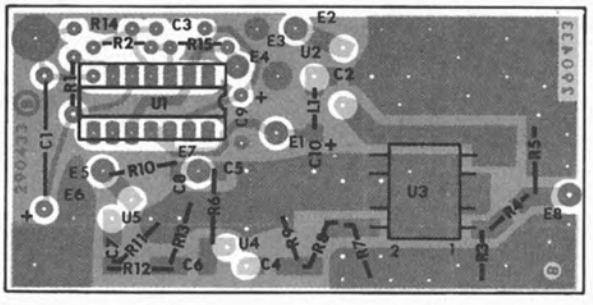

Figure 5-28. Part 290433-1 Buffer (A4A2A1A2), Location of Components

Courtesy of http://BlackRadios.terryo.org

5.5.3.2.1.3 **Part 290434-1 Prescaler** REF DESIG PREFIX **A4A2A1A3**

REF DESIG	DESCRIPTION	QTY PER ASSY	MANUFACTURER'S PART NO.	MFR. CODE	RECM VENDOR
C1	Capacitor, Ceramic, Chip: 470 pF, 10%, 100 V	7	C1210E471K1GAH	31433	
C2 Thru C6	Same as C1				
C7	Capacitor, Ceramic, Disc: .1 µF, 20%, 50 V	1	34475-1	14632	
C8	Same as C1				
RA1	Heatsink	1	290505-1	14632	
R1	Resistor, Fixed, Film: 120Ω, 5%, 1/8 W	2	CF1/8-120 OHMS/J	09021	
R2	Resistor, Fixed, Film: 220Ω, 5%, 1/8 W	1	CF1/8-220 OHMS/J	09021	
R3	Resistor, Fixed, Film: 150Ω, 5%, 1/8 W	1	CF1/8-150 OHMS/J	09021	
R4	Resistor, Fixed, Film: 470Ω, 5%, 1/8 W	4	C3-470R-5PCT	24546	
R5	Same as R4				
R6	Resistor, Fixed, Film: 1 kΩ, 5%, 1/8 W	1	C3-1K-5PCT	24546	
R7	Same as R4				
R8	Same as R4				
R9	Resistor, Fixed, Film: 10 kΩ, 5%, 1/8 W	1	C3-10K-5PCT	24546	
U1	Integrated Circuit	1	SP8611B	52648	
U2	Integrated Circuit	1	MC12013P	04713	

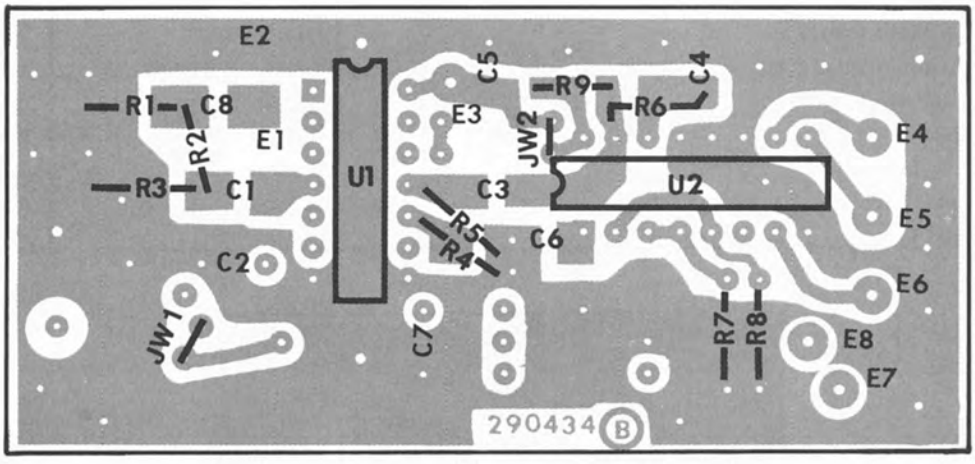

Figure 5-29. Part 290434-1 Prescaler (A4A2A1A3), Location of Components

Courtesy of http://BlackRadios.terryo.org

5.5.3.2.2 Part 290443-1 Diode Control

REF DESIG PREFIX **A4A2A2**

REF DESIG	DESCRIPTION	QTY PER ASSY	MANUFACTURER'S PART NO.	MFR. CODE	RECM VENDOR
C1	Capacitor, Ceramic, Disc: .1 µF, 20%, 50 V	4	34475-1	14632	
C2 Thru C4	Same as C1				
CR1	Diode	5	1N4446	80131	
CR2 Thru CR5	Same as CR19				
R1	Resistor, Fixed, Film: 22 kΩ, 5%, 1/4 W	1	CF1/4-22K/J	09021	
R2	Resistor, Fixed, Film: 3.3 kΩ, 5%, 1/4 W	1	CF1/4-3.3K/J	09021	
R3	Resistor, Fixed, Film: 15 kΩ, 5%, 1/4 W	2	CF1/4-15K/J	09021	
R4	Same as R3				
U1	Integrated Circuit	2	B2716	34649	
U2	Same as U1				
U3	Integrated Circuit	2	CD4021AE	02735	
U4	Integrated Circuit	3	MM74C161N	27014	
U5	Same as U4				
U6	Same as U4				
U7	Same as U3				
U8	Integrated Circuit	1	ULN2004A	56289	
U9	Integrated Circuit	1	SN74LS74N	01295	

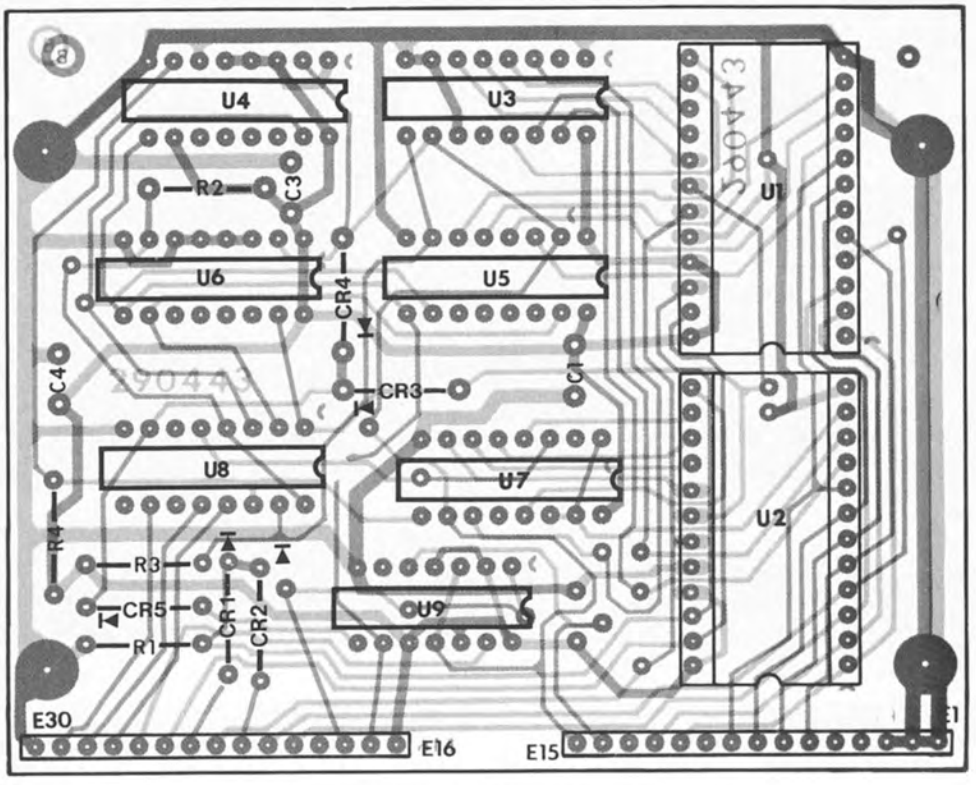

Figure 5-30. Part 290443-1 Diode Control (A4A2A2), Location of Components

Courtesy of http://BlackRadios.terryo.org

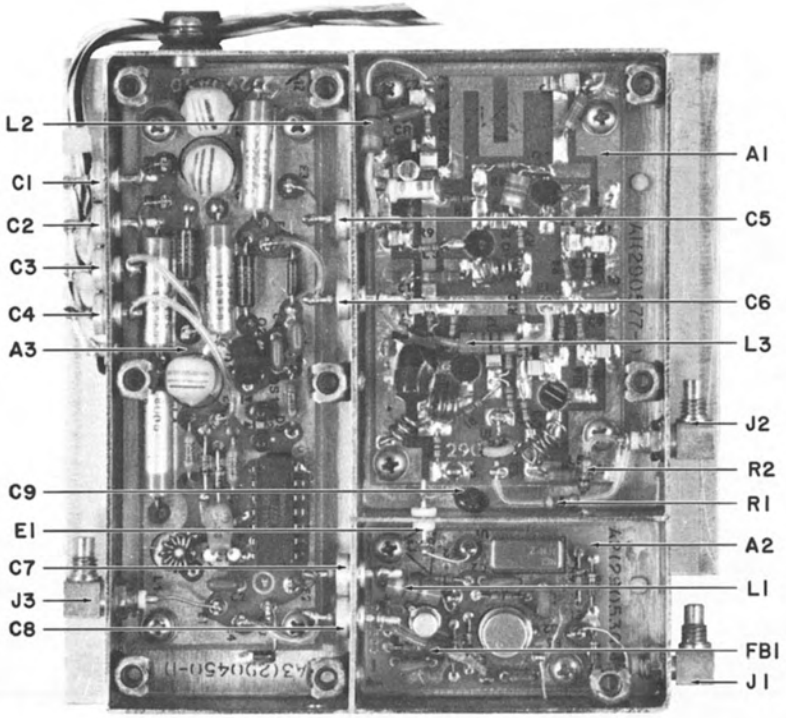

Figure 5-31. Type 778002-1 Translation Oscillator (A4A3), Top View, Location of Components

Courtesy of http://BlackRadios.terryo.org

5.5.3.3 **Type 778002-1 Translation Oscillator** REF DESIG PREFIX **A4A3**

REF DESIG	DESCRIPTION	QTY PER ASSY	MANUFACTURER'S PART NO.	MFR. CODE	RECM VENDOR
A1	VCO Buffer	1	290557-1	14632	
A2	4.4 - 5.4 MHz Amplifier	1	290536-1	14632	
A3	Phase Detector	1	290450-1	14632	
C1	Capacitor, Ceramic, Feedthru: 1000 pF, 500 V	5	54-794-009-102-W	33095	
C2	Same as C1				
C3	Capacitor, Modified	2	33728-7	14632	
C4	Same as C3				
C5	Same as C1				
C6	Same as C1				
C7	Capacitor, Ceramic, Feedthru: 33 pF, 10%, 500 V	1	54-794-001-3301	33095	
C8	Same as C1				
C9	Capacitor, Mica, Dipped: 15 pF, 5%, 500 V	1	CM04CD150J03	81349	
FB1	Ferrite Bead	1	56-590-65-4A	02114	
J1	Connector, Receptacle	3	1012-1511-000	19505	
J2	Same as J1				
J3	Same as J1				
L1	Coil, Fixed: 2.2 µH, 10%	1	1537-20	99800	
L2	Coil, Fixed: 33 µH, 5%	1	1537-52	99800	
L3	Coil, Fixed: 100 µH, 5%	1	1537-76	99800	
P1	Connector, Plug	1	1-87499-1	00779	
R1	Resistor, Fixed, Film: 47Ω, 5%, 1/4 W	1	CF1/4-47 OHMS/J	09021	
R2	Resistor, Fixed, Film: 100Ω, 5%, 1/4 W	1	CF1/4-100 OHMS/J	09021	

Courtesy of http://BlackRadios.terryo.org

5.5.3.3.1 Part 290557-1 VCO/Buffer REF DESIG PREFIX **A4A3A1**

REF DESIG	DESCRIPTION	QTY PER ASSY	MANUFACTURER'S PART NO.	MFR. CODE	RECM VENDOR
C1	Capacitor, Ceramic, Chip: 470 pF, 10%, 100 V	10	C1210E471K1GAH	31433	
C2	Same as C1				
C3	Capacitor, Ceramic, Chip: 6.8 pF, ±.25 pF, 500 V	2	ATC100B6R8CP500X	29990	
C4	Not Used				
C5	Capacitor, Ceramic, Tubular: 2.2 pF, 0.25 pF, 500 V	1	301-000U2JO-229C	59660	
C6	Capacitor, Ceramic, Chip: 1.8 pF, ±.1%, 100 V	1	100-100-NPO-1893	51642	
C7	Capacitor, Variable, Air: .6 - 4.5 pF, 500 V	1	M5J	18736	
C8	Same as C3				
C9	Same as C1				
C10	Capacitor, Ceramic, Disc: .47 µF, 20%, 50 V	1	34452-1	14632	
C11	Capacitor, Composition, Tubular: .62 pF, 10%, 500 V	1	QCO-62PFK	95121	
C12 Thru C18	Same as C1				
C19	Capacitor, Ceramic, Chip: 1.5 pF, ±.1 pF, 500 V	1	ATC700B1R5BP500X	29990	
C20	Not Used				
C21	Not Used				

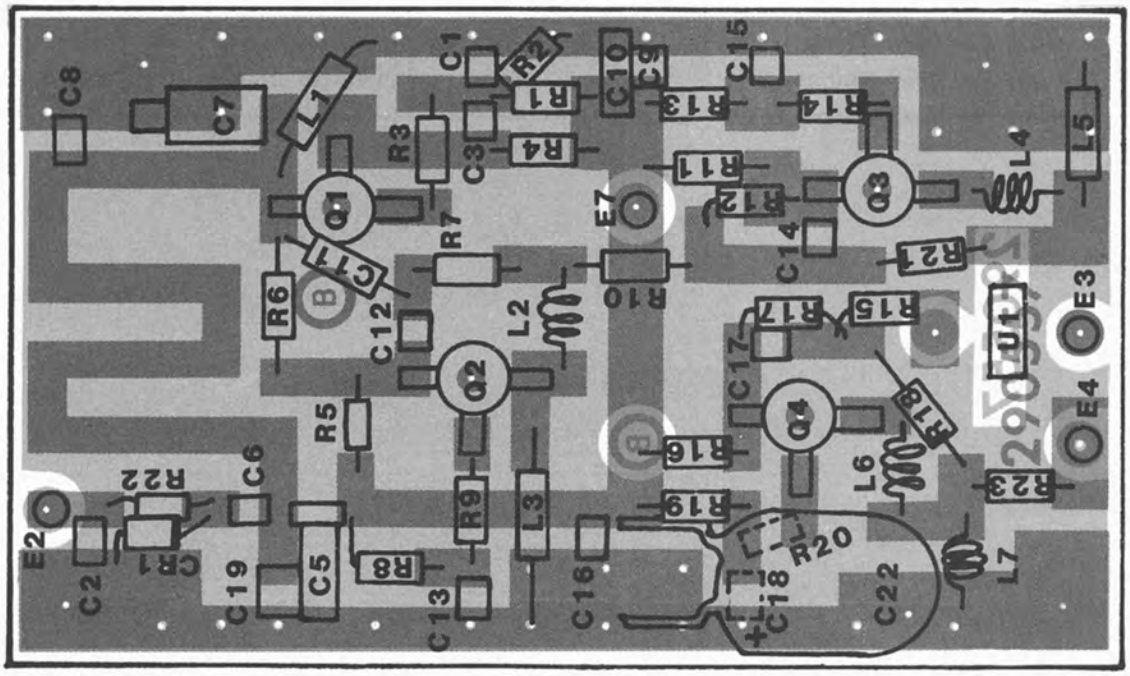

Figure 5-32. Part 290557-1 VCO/Buffer (A4A3A1), Location of Components

Courtesy of http://BlackRadios.terryo.org

REF DESIG PREFIX **A4A3A1**

REF DESIG	DESCRIPTION	QTY PER ASSY	MANUFACTURER'S PART NO.	MFR. CODE	RECM VENDOR
C22	Capacitor, Electrolytic, Tantalum: 100 µF, 20%, 20 V	1	196D107X0020TE4	56289	
CR1	Diode	1	UH-3102	52673	
L1	Coil, Fixed: .68 µH	3	1025-16	99800	
L2	Coil, Fixed	3	1129-46	14632	
L3	Same as L1				
L4	Same as L2				
L5	Same as L1				
L6	Same as L2				
L7	Coil, Fixed	1	1129-28	14632	
Q1	Transistor, Modified	1	180565	14632	
Q2	Transistor	3	BFR96	73445	
Q3	Same as Q2				
Q4	Same as Q2				
R1	Resistor, Fixed, Film: 1.0 kΩ, 5%, 1/8 W	4	C3-1K-5PCT	24546	
R2	Resistor, Fixed, Film: 4.7 kΩ, 5%, 1/8 W	5	C3-4.7K-5PCT	24546	
R3	Resistor, Fixed, Film: 10Ω, 5%, 1/8 W	1	C3-10R-5PCT	24546	
R4	Resistor, Fixed, Film: 180Ω, 5%, 1/8 W	1	C3-180R-5PCT	24546	
R5	Same as R1				
R6	Same as R2				
R7	Resistor, Fixed, Film: 100Ω, 5%, 1/8 W	3	C3-100R-5PCT	24546	
R8	Resistor, Fixed, Film: 220Ω, 5%, 1/8 W	3	C3-220R-5PCT	24546	
R9	Resistor, Fixed, Film: 2.7Ω, 5%, 1/8 W	4	CF1/8-2.7 OHMS/J	09021	
R10	Same as R9				
R11	Same as R1				
R12	Same as R2				
R13	Same as R8				
R14	Same as R9				
R15	Resistor, Fixed, Film: 27Ω, 5%, 1/8 W	2	C3-27R-5PCT	24546	
R16	Same as R1				
R17	Same as R2				
R18	Same as R7				
R19	Same as R8				
R20	Same as R9				
R21	Same as R7				
R22	Same as R2				
R23	Same as R15				
U1	Power Divider	1	290558-1	14632	
U1R1	Resistor, Fixed, Film: 100Ω, 5%, 1/8 W	1	CF1/8-100 OHMS/J	09021	

Courtesy of http://BlackRadios.terryo.org

5.5.3.3.2 **Part 290536-1 4.4-5.4 MHz Amplifier** REF DESIG PREFIX **A4A3A2**

REF DESIG	DESCRIPTION	QTY PER ASSY	MANUFACTURER'S PART NO.	MFR. CODE	RECM VENDOR
C1	Capacitor, Ceramic, Disc: 1000 pF, 500 V	1	B-GP1000PFP	91418	
C2	Capacitor, Ceramic, Disc: 5000 pF, 20%, 100 V	2	C023B101E502M	56289	
C3	Capacitor, Ceramic, Disc: 0.1 µF, 20%, 100 V	1	8131M100-651-104M	59660	
C4	Same as C2				
Q1	Transistor	1	2N2222A	80131	
R1	Resistor, Fixed, Film: 100Ω, 5%, 1/8 W	1	CF1/8-100 OHMS/J	09021	
R2	Resistor, Fixed, Film: 2 kΩ, 5%, 1/8 W	2	CF1/8-2K/J	09021	
R3	Same as R2				
R4	Resistor, Fixed, Film: 8.2 kΩ, 5%, 1/8 W	1	CF1/8-8.2K/J	09021	
R5	Resistor, Fixed, Composition: 5.1 kΩ, 5%, 1/8 W	1	RCR05G512JS	09021	
R6	Resistor, Fixed, Film: 510Ω, 5%, 1/8 W	1	CF1/8-510 OHMS/J	81349	
R7	Resistor, Fixed, Film: 68Ω, 5%, 1/8 W	2	CF1/8-68 OHMS/J	09021	
R8	Resistor, Fixed, Film: 270Ω, 5%, 1/8 W	1	CF1/8-270 OHMS/J	09021	
R9	Same as R7				
U1	Mixer, Double Balanced	1	TFM-2	15542	
U2	Integrated Circuit	1	N5733K	18324	

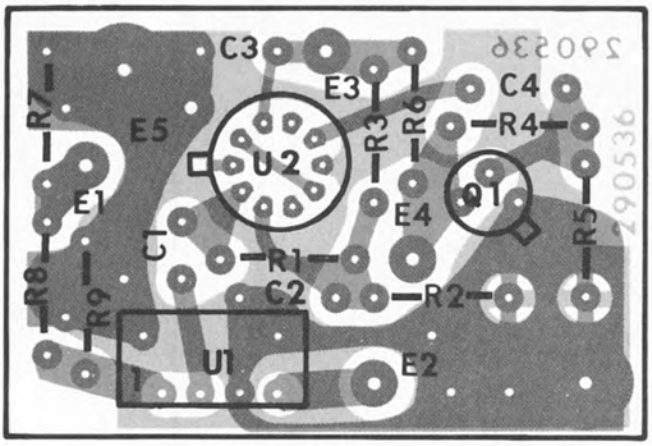

Figure 5-33. Part 290536-1 4.4-5.4 MHz Amplifier (A4A3A2), Location of Components

Courtesy of http://BlackRadios.terryo.org

5.5.3.3.3 Part 290450-1 Phase Detector

REF DESIG PREFIX **A4A3A3**

REF DESIG	DESCRIPTION	QTY PER ASSY	MANUFACTURER'S PART NO.	MFR. CODE	RECM VENDOR
C1	Capacitor, Electrolytic, Tantalum: 22 µF, 20%, 10 V	1	196D226X0010JE3	56289	
C2	Capacitor, Ceramic, Disc: .01 µF, 20%, 50 V	2	34453-1	14632	
C3	Capacitor, Ceramic, Disc: .1 µF, 20%, 50 V	1	34475-1	14632	
C4	Same as C2				
C5	Capacitor, Electrolytic, Tantalum: 100 µF, 20%, 35 V	3	MTP107M035P1C	76055	
C6	Same as C5				
C7	Same as C5				
C8	Capacitor, Electrolytic, Tantalum: 200 µF, 20%, 15 V	1	MTP207M015P1C	76055	
C9	Capacitor, Ceramic, Monolithic: 24 pF, 2%, 100 V	1	150-100-NPO 240G	51643	
CR1	Diode	2	1N4446	80131	
CR2	Same as CR1				
DS1	Diode: LED	2	HLMP-1301	28480	
DS2	Same as DS1				
L1	Coil, Fixed	1	20681-185	14632	
L2	Coil, Fixed: 1.2 mH, 10%	1	553-3635-38	71279	
L3	Coil, Fixed: 6.8 mH, 10%	1	553-3635-47	71279	
L4	Coil, Fixed: 220 µH, 10%	1	553-3635-29	71279	
Q1	Transistor	2	2N3904	80131	
Q2	Same as Q1				
R1	Resistor, Fixed, Film: 1.5 kΩ, 1%, 1/10 W	1	RN55C1501F	81349	
R2	Resistor, Fixed, Film: 1.0 kΩ, 1%, 1/10 W	1	RN55C1001F	81349	
R3	Resistor, Fixed, Film: 332Ω, 1%, 1/10 W	1	RN55C3320F	81349	
R4	Resistor, Fixed, Film: 1.0 kΩ, 1%, 1/4 W	1	RN60D1001F	81349	
R5	Resistor, Fixed, Film: 324Ω, 1%, 1/4 W	1	RN60D3240F	81349	
R6	Resistor, Fixed, Film: 5.11 kΩ, 1%, 1/10 W	1	RN55C5111F	81349	
U1	Integrated Circuit	1	MC4044P	04713	

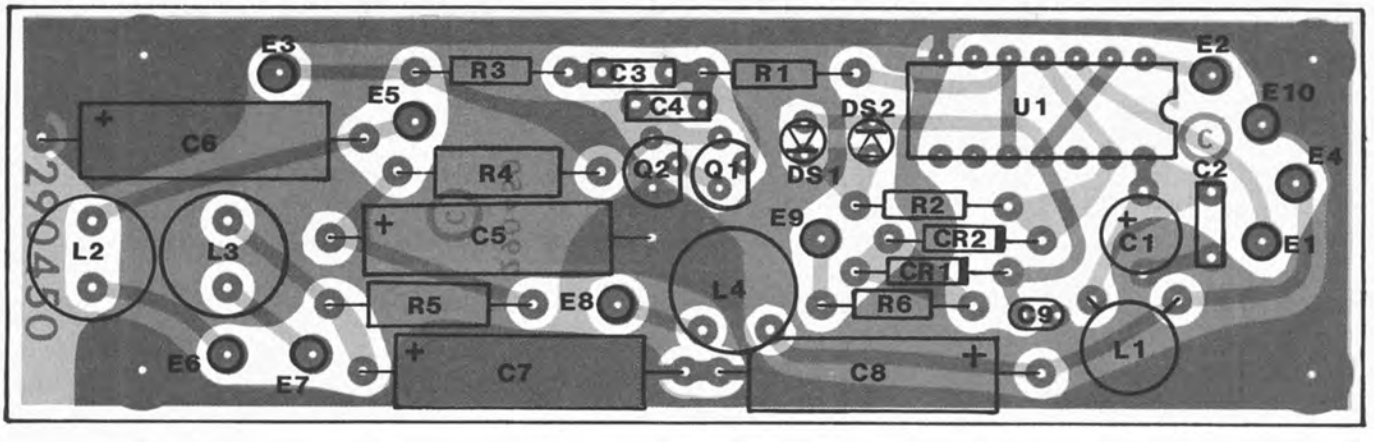

Figure 5-34. Part 290450-1 Phase Detector (A4A3A3), Location of Components

Courtesy of http://BlackRadios.terryo.org

5.5.3.4 **Type 776002-1 4.4-5.4 MHz Synthesizer Assembly** REF DESIG PREFIX **A4A4**

REF DESIG	DESCRIPTION	QTY PER ASSY	MANUFACTURER'S PART NO.	MFR. CODE	RECM VENDOR
A1	352-432 MHz VCO and Divide by 80 Assembly	1	290454-1	14632	
A2	Prescaler Assembly	1	290455-1	14632	
A3	Divider and Phase Comparator Assembly	1	380374-1	14632	
C1	Capacitor, Ceramic, Feedthru: 1000 pF, 500 V	5	54-794-009-102W	33095	
C2 Thru C5	Same as C1				
FB1	Ferrite Bead	3	56-590-65-4A	02114	
FB2	Same as FB1				
FB3	Same as FB1				
J1	Connector, Receptacle	1	1012-1511-000	19505	
R1	Resistor, Fixed, Film: 475Ω, 1%, 1/10 W	1	RN55C4750F	81349	
R2	Resistor, Fixed, Film: 100Ω, 1%, 1/10 W	2	RN55C1000F	81349	
R3	Same as R2				
R4	Resistor, Fixed, Film: 27Ω, 5%, 1/8 W	1	CF1/8-27 OHMS/J	09021	
R5	Resistor, Fixed, Film: 120Ω, 5%, 1/8 W	1	CF1/8-120 OHMS/J	09021	

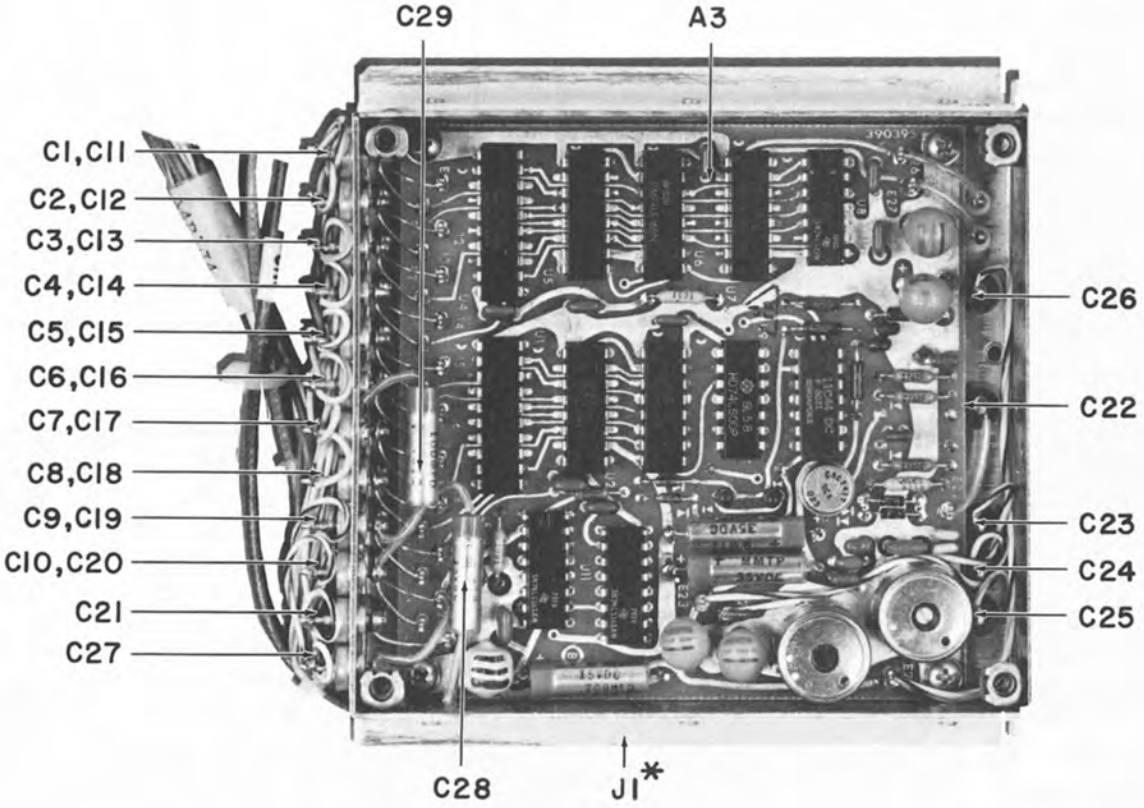

Figure 5-35. Type 776002-1 4.4-5.4 MHz Synthesizer Assembly (A4A4), Top View, Location of Components

Courtesy of http://BlackRadios.terryo.org

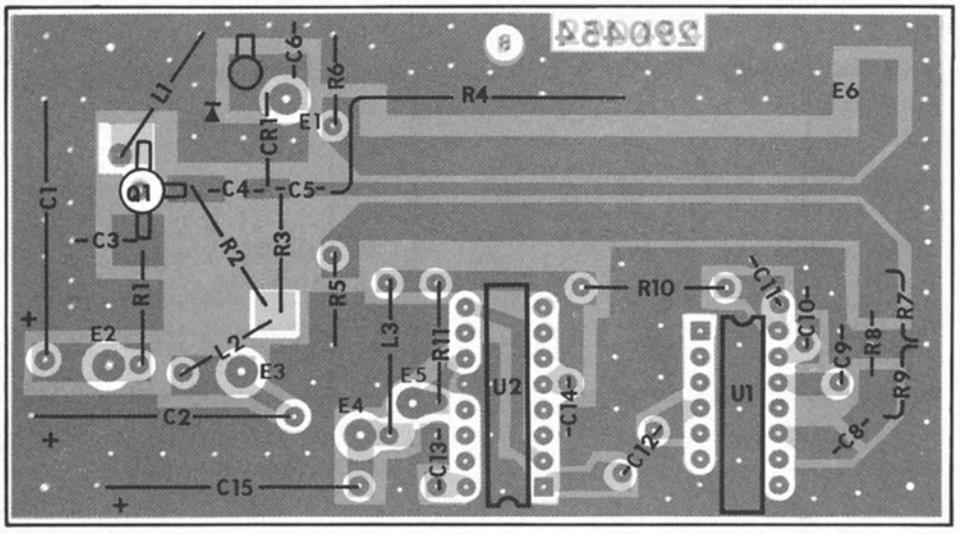

Figure 5-36. Part 290454-1 352-432 MHz VCO and Divide-by-80 Assembly (A4A4A1), Location of Components

Courtesy of http://BlackRadios.terryo.org

5.5.3.4.1 **Part 290454-1 352-432 MHz VCO and Divide-By-80 Assembly**

REF DESIG PREFIX A4A4A1

REF DESIG	DESCRIPTION	QTY PER ASSY	MANUFACTURER'S PART NO.	MFR. CODE	RECM VENDOR
C1	Capacitor, Electrolytic, Tantalum: 100 µF, 20%, 35 V	2	MTP107M035PIC	76055	
C2	Same as C1				
C3	Capacitor, Ceramic, Chip: 220 pF, 10%, 50 V	3	C1210C221K5GAH	05397	
C4	Capacitor, Ceramic, Chip: 100 pF, 20%, 500 V	2	ATC100B101MP500	29990	
C5	Same as C4				
C6*	Capacitor, Ceramic, Chip: 20 pF, 10%, 500 V	1	ATC100B200KP500	29990	
C7	Capacitor, Variable, Air: .6 - 4.5 pF, 500 V	1	M5F	18736	
C8	Same as C3				
C9	Capacitor, Ceramic, Disc: .01 µF, 20%, 50 V	4	34453-1	14632	
C10	Same as C9				
C11	Capacitor, Ceramic, Disc: .1 µF, 20%, 50 V	2	34475-1	14632	
C12	Same as C9				
C13	Same as C9				
C14	Same as C11				
C15	Capacitor, Electrolytic, Tantalum: 200 µF, 20%, 15 V	1	MTP207M015P1C	76055	
C16	Same as C3				
C17	Capacitor, Ceramic, Monolithic: 2.0 pF ± 1 pF, 100 V	1	100-100-NPO-209B	51642	
CR1	Diode	1	U11-3102	52673	
L1	Coil, Fixed	1	180073-1	14632	
L2	Not Used				
L3	Coil, Fixed: 100 µH, 5%	1	1537-76	99800	
Q1	Transistor	1	BFR96	73445	
R1	Resistor, Fixed, Film: 100Ω, 1%, 1/10 W	1	RN55C1000F	81349	
R2	Resistor, Fixed, Film: 432Ω, 1%, 1/4 W	1	RN60D4320F	81349	
R3*	Resistor, Fixed, Film: 2.7 kΩ, 5%, 1/8 W	1	C3-2.7K-5PCT	24546	
R4	Not Used				
R5	Resistor, Fixed, Composition: 51Ω, 5%, 1/8 W	2	RCR05G510JS	81349	
R6	Same as R5				
R7	Resistor, Fixed, Film: 100Ω, 5%, 1/8 W	2	CF1/8-100 OHMS/J	09021	
R8	Resistor, Fixed, Film: 68Ω, 5%, 1/8 W	1	CF1/8-68 OHMS/J	09021	
R9	Same as R7				
R10	Resistor, Fixed, Film: 10Ω, 5%, 1/4 W	1	CF1/4-10 OHMS/J	09021	
R11	Resistor, Fixed, Film: 1.0 kΩ, 5%, 1/4 W	1	CF1/4-1.0K/J	09021	
U1	Integrated Circuit	1	SP8630B	52648	
U2	Integrated Circuit	1	SP8691B	52648	

* Nominal Value, Final Value Factory Selected

Courtesy of http://BlackRadios.terryo.org

5.5.3.4.2 **Part 290455-1 Prescaler Assembly** REF DESIG PREFIX **A4A4A2**

REF DESIG	DESCRIPTION	QTY PER ASSY	MANUFACTURER'S PART NO.	MFR. CODE	RECM VENDOR
C1	Capacitor, Ceramic, Chip: 220 pF, 10%, 50 V	1	C1210C221KGAH	05397	
C2	Capacitor, Ceramic, Disc: .01 µF, 20%, 50 V	3	34453-1	14632	
C3	Same as C2				
C4	Same as C2				
R1	Resistor, Fixed, Film: 27Ω, 5%, 1/8 W	1	CF1/8-27 OHMS/J	09021	
R2	Resistor, Fixed, Film: 1.0 kΩ, 5%, 1/4 W	2	CF1/4-1K/J	09021	
R3	Resistor, Fixed, Film: 91Ω, 5%, 1/4 W	1	CF1/4-91 OHMS/J	09021	
R4	Resistor, Fixed, Film: 680Ω, 5%, 1/4 W	1	CF1/4-680 OHMS/J	09021	
R5	Resistor, Fixed, Film: 1.1 kΩ, 5%, 1/4 W	1	CF1/4-1.1K/J	09021	
R6	Resistor, Fixed, Film: 3.0 kΩ, 5%, 1/4 W	3	CF1/4-3.0K/J	09021	
R7	Same as R6				
R8	Same as R6				
R9	Same as R2				
R10	Resistor, Fixed, Film: 4.7 kΩ, 5%, 1/4 W	1	CF1/4-4.7K/J	09021	
R11	Resistor, Fixed, Film: 33Ω, 5%, 1/8 W	1	CF1/8-33 OHMS/J	09021	
U1	Integrated Circuit	1	SP8680B	52648	
U2	Integrated Circuit	1	SP8695B	52648	
U3	Integrated Circuit	1	MC1013IL	04713	

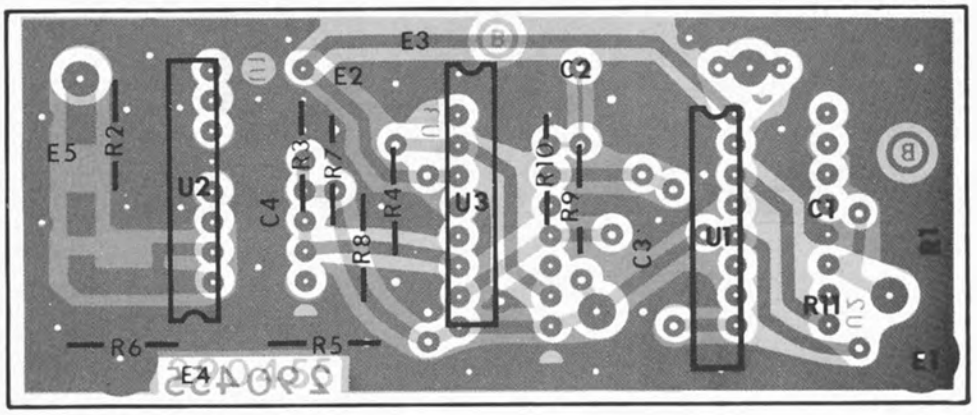

Figure 5-37. Part 290455-1 Prescaler Assembly (A4A4A2), Location of Components

Courtesy of http://BlackRadios.terryo.org

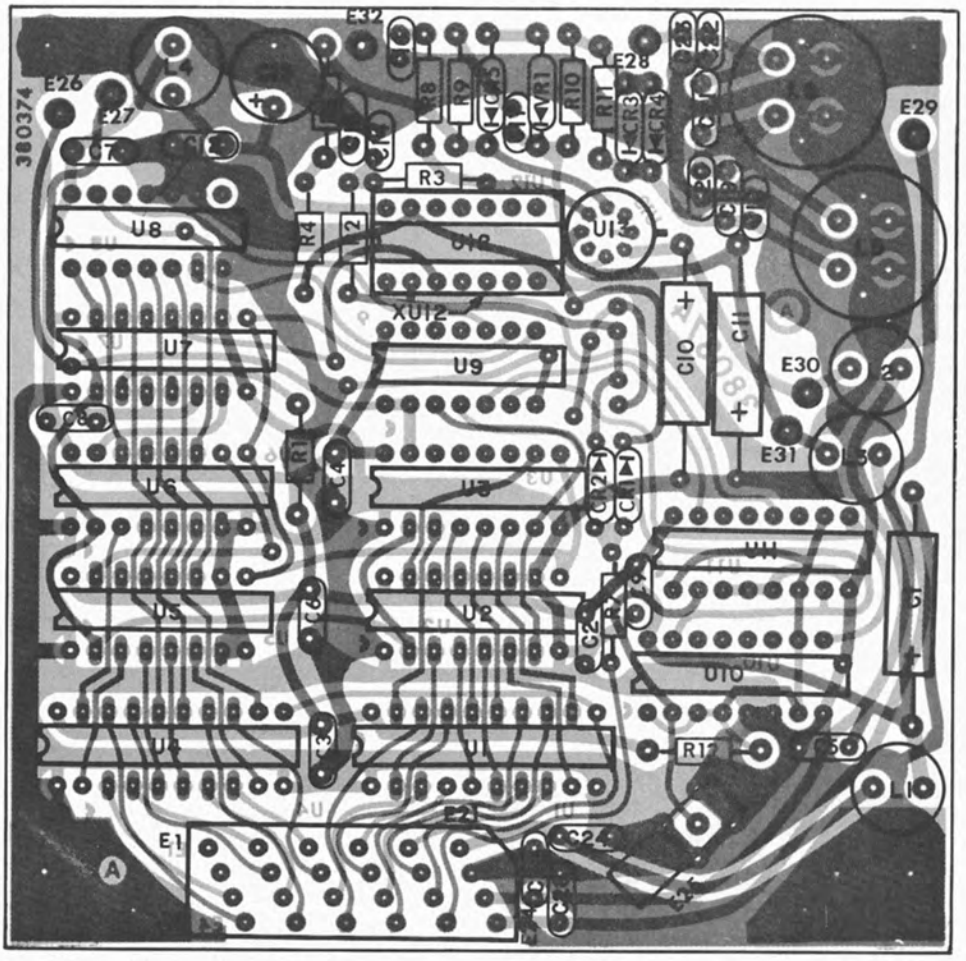

Figure 5-38. Part 380374-1 Divider and Phase Comparator (A4A4A3), Location of Components

Courtesy of http://BlackRadios.terryo.org

5.5.3.4.3 Part 380374-1 Divider and Phase Comparator

REF DESIG PREFIX **A4A4A3**

REF DESIG	DESCRIPTION	QTY PER ASSY	MANUFACTURER'S PART NO.	MFR. CODE	RECM VENDOR
C1	Capacitor, Electrolytic, Tantalum: 200 µF, 20%, 15 V	1	MTP207M015P1C	76055	
C2	Capacitor, Ceramic, Disc: .01 µF, 20%, 50 V	4	34453-1	14632	
C3 Thru C5	Same as C2				
C6	Capacitor, Ceramic, Disc: .01 µF, 20%, 50 V	8	34475-1	14632	
C7 Thru C9	Same as C6				
C10	Capacitor, Electrolytic, Tantalum: 100 µF, 20%, 35 V	2	MTP107M035P1C	76055	
C11	Same as C10				
C12	Same as C6				
C13	Capacitor, Electrolytic, Tantalum: 150 µF, 20%, 6 V	1	196D157X0006PE4	56289	
C14	Capacitor, Ceramic, Disc: 4700 pF, 10%, 100 V	2	8121-100C0G0-152J	59660	
C15	Same as C14				
C16	Capacitor, Ceramic, Disc: .015 µF, 10%, 100 V	3	8121-100X7R0-472K	59660	
C17	Same as C16				
C18	Same as C16				
C19	Capacitor, Ceramic, Disc: 3300 pF, 2%, 100 V	1	8131-100C0G0-332G	59660	
C20	Capacitor, Ceramic, Disc: .047 µF, 10%, 100 V	1	8121-100X7R0-473K	59660	
C21	Capacitor, Ceramic, Disc: 6800 pF, 5%, 100 V	1	8131-100C0G0-682J	59660	
C22	Capacitor, Ceramic, Disc: .022 µF, 10%, 100 V	2	8121-100X7R0-223K	59660	
C23	Same as C22				
C24 Thru C26	Same as C6				
CR1	Diode	2	1N4446	80131	
CR2	Same as CR1				
CR3	Diode	2	5082-2800	28480	
CR4	Same as CR3				
CR5	Diode	1	1N4449	80131	
E26	Terminal, Forked	7	140-1941-02-01	71279	
E27 Thru E32	Same as E26				
L1	Coil, Fixed: 10 µH, 10%	1	553-3635-13	71279	
L2	Coil, Fixed: 680 µH, 10%	3	553-3635-35	71279	
L3	Same as L2				
L4	Same as L2				
L5	Coil, Fixed: 49.5 mH	1	30312-299	14632	
L6	Coil, Variable: 55.3 mH	1	30312-298	14632	

Courtesy of http://BlackRadios.terryo.org

REF DESIG PREFIX **A4A4A3**

REF DESIG	DESCRIPTION	QTY PER ASSY	MANUFACTURER'S PART NO.	MFR. CODE	RECM VENDOR
P1	Plug Assembly	1	280434-1	14632	
P2	Plug Assembly	1	280438-1	14632	
R1	Resistor, Fixd, Film: 1.0 kΩ, 1%, 1/10 W	29	RN55C1001F	81349	
R2	Resistor, Fixed, Film: 3.65 kΩ, 1%, 1/10 W	3	RN55C3651F	81349	
R3	Same as R2				
R4	Resistor, Fixed, Film: 3.16 kΩ, 1%, 1/10 W	1	RN55C3161F	81349	
R5	Same as R2				
R6	Not Used				
R7	Resistor, Fixed, Film: 5.11 kΩ, 1%, 1/10 W	1	RN55C5111F	81349	
R8	Resistor, Fixed, Film: 27.4 kΩ, 1%, 1/10 W	2	RN55C2742F	81349	
R9	Same as R8				
R10	Resistor, Fixed, Film: 274Ω, 1%, 1/10 W	1	RN55C2740F	81349	
R11	Resistor, Fixed, Film: 825Ω, 1%, 1/10 W	1	RN55C8250F	81349	
R12	Same as R1				
R13	Resistor, Variable, Film: 1 kΩ, 10%, 1/4 W	1	326W1-102	80294	
U1	Integrated Circuit	2	MM74C374N	27014	
U2	Integrated Circuit	5	SN74LS168N	01295	
U3	Same as U2				
U4	Same as U1				
U5 Thru U7	Same as U2				
U8	Integrated Circuit	1	SN74LS27N	01295	
U9	Integrated Circuit	1	SN74LS00N	01295	
U10	Integrated Circuit	2	SN74LS161AN	01295	
U11	Same as U10				
U12	Integrated Circuit	1	MC4044P	04713	
U13	Integrated Circuit	1	CA6741T	02735	
VR1	Diode, Zener: 7.5 V	1	1N755	80131	

Courtesy of http://BlackRadios.terryo.org

5.5.3.5 **Type 794195-1 SSB BFO (Optional)** REF DESIG PREFIX **A4A5**

REF DESIG	DESCRIPTION	QTY PER ASSY	MANUFACTURER'S PART NO.	MFR. CODE	RECM VENDOR
C1	Capacitor, Electrolytic, Tantalum: 2.2 µF, 20%, 35 V	3	196D225X0035JE3	56289	
C2	Same as C1				
C3	Same as C1				
C4	Capacitor, Mica, Dipped: 1800 pF, 2%, 500 V	1	CM06FD182G03	81349	
C5	Capacitor, Mica, Dipped: 56 pF, 2%, 500 V	1	CM05ED560G03	81349	
C6	Capacitor, Variable, Ceramic: 9-35 pF, 350 V	1	538-006D9-35	59660	
C7	Capacitor, Mica, Dipped: 47 pF, 2%, 500 V	2	CM05ED470G03	81349	
C8	Capacitor, Ceramic, Disc: 4700 pF, 20%, 50 V	6	8121-050651-472M	59660	
C9	Same as C8				
C10	Same as C8				
C11	Same as C7				
C12	Same as C8				
C13	Same as C8				
C14	Capacitor, Ceramic, Disc: 1000 pF, 5%, 100 V	1	8121-100C0G0-102J	59660	
C15	Same as C8				
C16	Capacitor, Ceramic, Disc: .01 µF, 20%, 50 V	9	34453-1	14632	
C17	Same as C16				
C18	Capacitor, Mica, Dipped: 250 pF, 5%, 500 V	1	DM15-251J	72136	
C19	Capacitor, Mica, Dipped: 150 pF, 2%, 500 V	1	CM05FD151G03	81349	
C20 Thru C25	Same as C16				
C26	Capacitor, Mica, Dipped: 36 pF, 2%, 500 V	2	CM05ED360G03	81349	
C27	Capacitor, Ceramic, Monolithic: 1 pF, ±.1 pF, 100 V	1	8101-100C0K0-109B	59660	
C28	Same as C26				
C29	Capacitor, Mica, Dipped: 300 pF, 2%, 500 V	1	CM05FD301G03	81349	
C30	Same as C16				
CR1	Diode	2	5082-2800	28480	
CR2	Same as CR1				
CR3	Diode	2	MPN3401	04713	
CR4	Same as CR3				
L1	Coil, Fixed: 1.2 mH	2	2500-32	99800	
L2	Coil, Fixed: 330 µF, 5%	1	2500-04	99800	
L3	Same as L1				
L4	Coil, Variable: .612 - .748 µH	4	558-7107-11	71279	
L5	Same as L4				
L6	Coil, Fixed: .82 µH, 10%	2	1537-10	99800	
L7	Same as L6				
L8	Same as L4				
L9	Same as L4				
Q1	Transistor	1	2N28571JAN	81350	
Q2	Transistor	1	2N2222A	80131	

Courtesy of http://BlackRadios.terryo.org

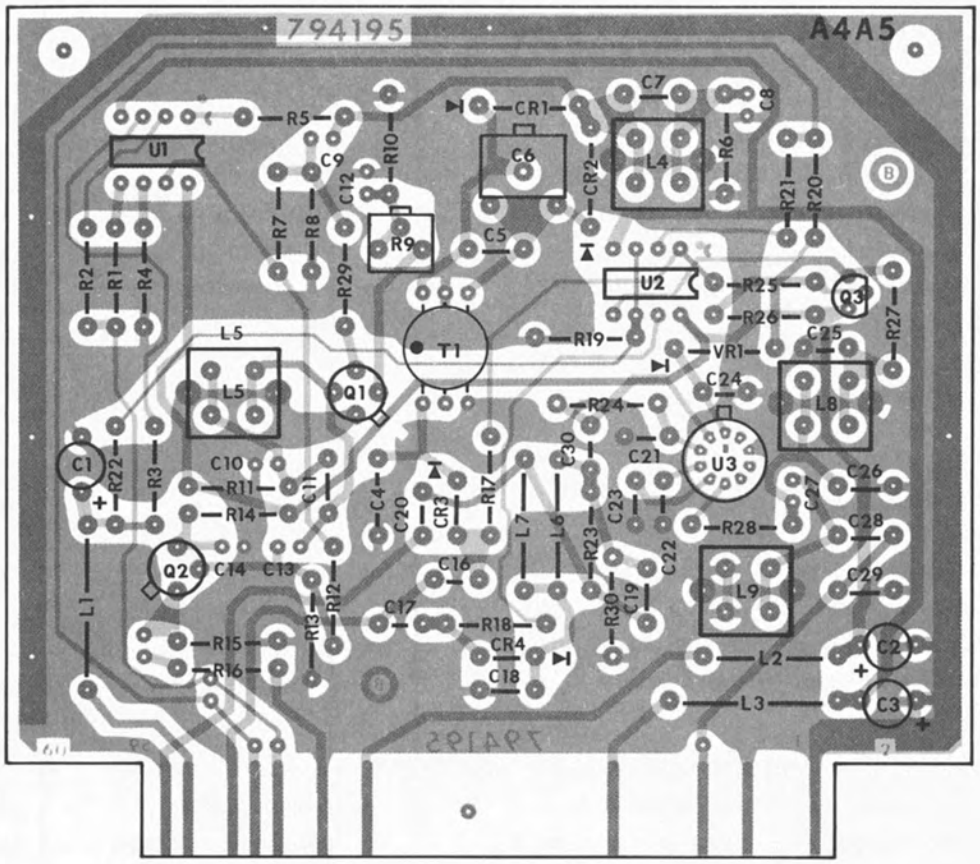

Figure 5-39. Type 794195-1 SSB BFO (Optional) (A4A5), Location of Components

Courtesy of http://BlackRadios.terryo.org

REF DESIG PREFIX **A4A5**

REF DESIG	DESCRIPTION	QTY PER ASSY	MANUFACTURER'S PART NO.	MFR. CODE	RECM VENDOR
Q3	Transistor	1	2N3906	80131	
R1	Resistor, Fixed, Film: 47 kΩ, 5%, 1/4 W	6	CF1/4-47K/J	09021	
R2	Same as R1				
R3	Resistor, Fixed, Film: 100 kΩ, 5%, 1/4 W	4	CF1/4-100K/J	09021	
R4	Same as R1				
R5	Same as R3				
R6	Resistor, Fixed, Film: 12 kΩ, 5%, 1/4 W	1	CF1/4-12K/J	09021	
R7	Resistor, Fixed, Film: 10 kΩ, 5%, 1/4 W	2	CF1/4-10K/J	09021	
R8	Same as R7				
R9	Resistor, Variable, Film: 1 kΩ, 10%, 1/2 W	1	62PAR1K	73138	
R10	Resistor, Fixed, Film: 2.7 kΩ, 5%, 1/4 W	1	CF1/4-2.7K/J	09021	
R11	Resistor, Fixed, Film: 100 kΩ, 5%, 1/4 W	5	CF1/4-100K/J	09021	
R12	Resistor, Fixed, Film: 4.7 kΩ, 5%, 1/4 W	1	CF1/4-4.7K/J	09021	
R13	Resistor, Fixed, Film: 22 kΩ, 5%, 1/4 W	1	CF1/4-22K/J	09021	
R14	Same as R11				
R15	Resistor, Fixed, Film: 470Ω, 5%, 1/4 W	1	CF1/4-470 OHMS/J	09021	
R16	Resistor, Fixed, Film: 47Ω, 5%, 1/4 W	1	CF1/4-47 OHMS/J	09021	
R17	Resistor, Fixed, Film: 2.2 kΩ, 5%, 1/4 W	2	CF1/4-2.2K/J	09021	
R18	Same as R17				
R19					
R20	Same as R1				
R21					
R22	Same as R3				
R23	Same as R11				
R24	Resistor, Fixed, Film: 510Ω, 5%, 1/4 W	1	CF1/4-510 OHMS/J	09021	
R25	Resistor, Fixed, Film: 56 kΩ, 5%, 1/4 W	1	CF1/4-56K/J	09021	
R26	Same as R3				
R27	Same as R11				
R28	Resistor, Fixed, Film: 220Ω, 5%, 1/4 W	1	CF1/4-220 OHMS/J	09021	
R29	Same as R11				
R30	Resistor, Fixed, Composition: 51Ω, 5%, 1/4 W	1	RCR07G510JS	81349	
T1	Transformer	1	24608-10	14632	
U1	Integrated Circuit	2	MC1458N	18324	
U2	Same as U1				
U3	Integrated Circuit	1	CA3011	02735	
VR1	Diode, Zener: 3.3 V	1	1N746A	80131	

Courtesy of http://BlackRadios.terryo.org

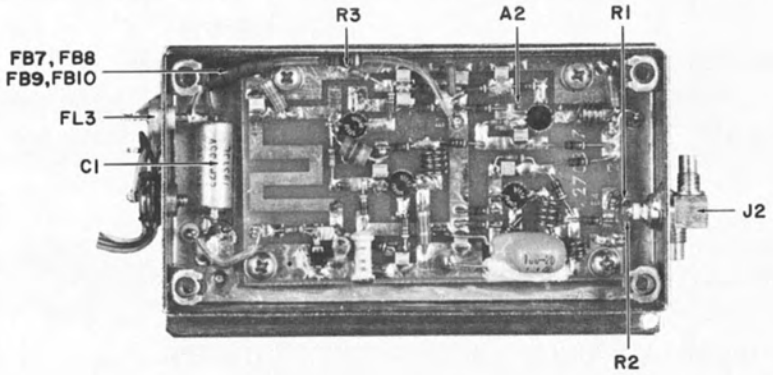

Figure 5-40. Type 798043-1 535 MHz Generator (A4A6), Right Side View, Location of Components

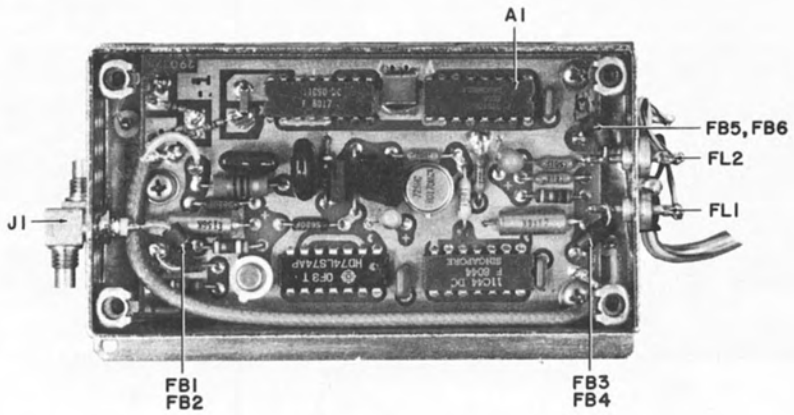

Figure 5-41. Type 798043-1 535 MHz Generator (A4A6), Left Side View, Location of Components

Courtesy of http://BlackRadios.terryo.org

5.5.3.6 **Type 798043-1 535 MHz Generator** REF DESIG PREFIX A4A6

REF DESIG	DESCRIPTION	QTY PER ASSY	MANUFACTURER'S PART NO.	MFR. CODE	RECM VENDOR
A1	535 MHz Generator	1	290325-1	14632	
A2	VCO/Buffer	1	290557-2	14632	
C1	Capacitor, Electrolytic, Tantalum: 22 µF, 10%, 35 V	1	CS13BF226K	81349	
FB1	Ferrite Bead	10	56-590-65-4A	02114	
FB2 Thru FB10	Same as FB1				
FB11	Ferrite Bead	2	P5-1288	01037	
FB12	Same as FB11				
FL1	Filter	3	51-722-001	33095	
FL2	Same as FL1				
FL3	Same as FL1				
J1	Connector, Receptacle	2	1012-1511-000	19505	
J2	Same as J1				
P1	Plug Assembly	1	370430-6	14632	
R1	Resistor, Fixed, Film: 220Ω, 5%, 1/8 W	1	CF1/8-220 OHMS/J	09021	
R2	Resistor, Fixed, Film: 56Ω, 5%, 1/8 W	1	CF1/8-56 OHMS/J	09021	
R3	Resistor, Fixed, Composition: 27Ω, 5%, 1/4 W	1	RCR07G270JS	81349	
R4	Resistor, Fixed, Film: 10 kΩ, 5%, 1/8 W	1	CF1/8-10K/J	09021	

Courtesy of http://BlackRadios.terryo.org

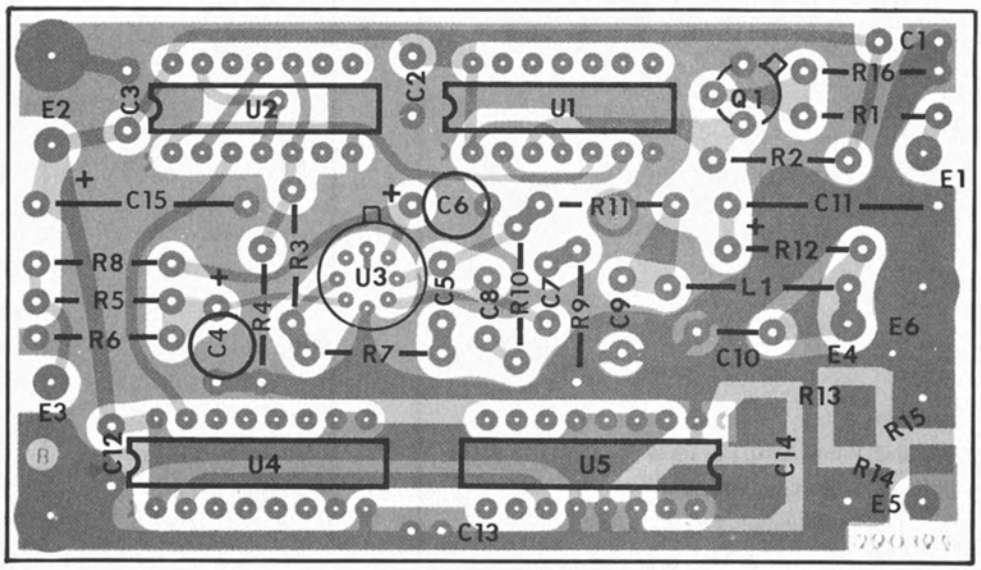

Figure 5-42. Part 290325-1 535 MHz Generator (A4A6A1), Location of Components

Courtesy of http://BlackRadios.terryo.org

5.5.3.6.1 Part 290325-1 535 MHz Generator

REF DESIG PREFIX **A4A6A1**

REF DESIG	DESCRIPTION	QTY PER ASSY	MANUFACTURER'S PART NO.	MFR. CODE	RECM VENDOR
C1	Capacitor, Ceramic, Disc: .01 µF, 20%, 50 V	4	34453-1	14632	
C2	Same as C1				
C3	Same as C1				
C4	Capacitor, Electrolytic, Tantalum: 15 µF, 20%, 15 V	1	196D156X0015JE3	56289	
C5	Capacitor, Ceramic, Disc: .022 µF, 10%, 100 V	1	CK06BX223K	81349	
C6	Capacitor, Electrolytic, Tantalum: 4.7 µF, 20%, 35 V	1	196D475X0035JE3	56289	
C7	Capacitor, Ceramic, Disc: .047 µF, 10%, 100 V	1	CK06BX473K	81349	
C8	Capacitor, Ceramic, Disc: 1500 pF, 10%, 200 V	1	CK06BX152K	81349	
C9	Capacitor, Mica, Dipped: 470 pF, 5%, 500 V	2	DM15-471J	72136	
C10	Same as C9				
C11	Capacitor, Electrolytic, Tantalum: 15 µF, 10%, 20 V	1	CS13BE156K	81349	
C12	Same as C1				
C13	Capacitor, Ceramic, Chip: .056 µF, 10%, 50 V	1	C2225C563P5XAH	05397	
C14	Capacitor, Ceramic, Chip: .01 µF, 10%, 100 V	1	C1805C103K1XAH	31433	
C15	Capacitor, Electrolytic, Tantalum: 47 µF, 10%, 6 V	1	CS13BB476K	81349	
L1	Coil, Fixed: 100 µH, 5%	1	1537-76	99800	
Q1	Transistor	1	2N2222A	80131	
R1	Resistor, Fixed, Film: 120Ω, 5%, 1/4 W	1	CF1/4-120 OHMS/J	09021	
R2	Resistor, Fixed, Film: 390Ω, 5%, 1/4 W	1	CF1/4-390 OHMS/J	09021	
R3	Resistor, Fixed, Film: 1.0 kΩ, 1%, 1/10 W	1	RN55C1001F	81349	
R4	Resistor, Fixed, Film: 10 kΩ, 1%, 1/10 W	2	RN55C1002F	81349	
R5	Resistor, Fixed, Film: 12.1 kΩ, 1%, 1/10 W	1	RN55C1212F	81349	
R6	Resistor, Fixed, Film: 1.5 kΩ, 1%, 1/10 w	1	RN55C1501F	81349	
R7	Same as R4				
R8	Resistor, Fixed, Film: 10Ω, 5%, 1/4 W	1	CF1/4-10 OHMS/J	09021	
R9	Resistor, Fixed, Film: 27Ω, 5%, 1/4 W	1	CF1/4-27 OHMS/J	09021	
R10	Resistor, Fixed, Film: 274Ω, 1%, 1/10 W	1	RN55C2740F	81349	
R11	Resistor, Fixed, Film: 562Ω, 1%, 1/10 W	2	RN55C5620F	81349	
R12	Same as R11				
R13	Resistor, Fixed, Film: 27Ω, 5%, 1/8 W	2	CF1/8-27 OHMS/J	09021	
R14	Same as R13				
R15	Resistor, Fixed, Film: 33Ω, 5%, 1/8 W	1	CF1/8-33 OHMS/J	09021	
R16	Resistor, Fixed, Film: 1.0 kΩ, 5%, 1/4 W	1	CF1/4-1.0K/J	09021	
U1	Integrated Circuit	1	SN74LS7N	01295	
U2	Integrated Circuit	1	MC4044P	04713	
U3	Integrated Circuit	1	725HC	07263	
U4	Integrated Circuit	1	74F160PC	07263	
U5	Integrated Circuit	1	SP8680B	07263	

Courtesy of http://BlackRadios.terryo.org

5.5.3.6.2 **Part 290557-2 VCO/Buffer** REF DESIG PREFIX **A4A6A2**

REF DESIG	DESCRIPTION	QTY PER ASSY	MANUFACTURER'S PART NO.	MFR. CODE	RECM VENDOR
C1	Capacitor, Ceramic, Chip: 470 pF, 10%, 100 V	9	C1210E471K1GAH	31433	
C2	Not used				
C3	Capacitor, Ceramic, Chip: 6.8 pF, ±.25 pF, 500 V	2	ATC100B6R8CP500X	29990	
C4	Not Used				
C5	Capacitor, Ceramic, Tubular: 2.2 pF, .25 pF, 500 V	1	301-000U2J0-229C	59660	
C6	Capacitor, Ceramic, Chip: 1.8 pF, ±.1 pF, 100 V	1	100-100-NPO-189-B	51642	
C7	Capacitor, Variable, Air: .6-4.5 pF, 500 V	1	M5F	18736	
C8	Same as C3				
C9	Same as C1				
C10	Capacitor, Ceramic, Disc: .47 µF, 20%, 50 V	1	34452-1	14632	
C11	Capacitor, Composition, Tubular: .62 pF, 10%, 500 V	1	QCO .62PFK	95121	
C12 Thru C18	Same as C1				
C19	Capacitor, Ceramic, Chip: 1.5 pF, ±0.1 pF, 500 V	1	ATC700B1R5BP500X	29990	
C20	Not Used				
C21	Not Used				

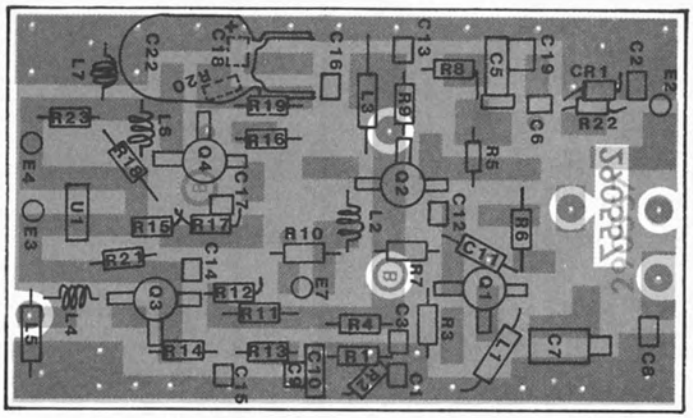

Figure 5-43. Part 290557-2 VCO/Buffer (A4A6A2), Location of Components

Courtesy of http://BlackRadios.terryo.org

REF DESIG PREFIX **A4A6A2**

REF DESIG	DESCRIPTION	QTY PER ASSY	MANUFACTURER'S PART NO.	MFR. CODE	RECM VENDOR
C22	Capacitor, Electrolytic, Tantalum: 100 µF, 20%, 20 V	1	196D107X0020TE4	56289	
CR1	Diode	1	U11-3102	52673	
L1	Coil, Fixed: .68 µH	3	1025-16	99800	
L2	Coil, Fixed	3	1129-46	14632	
L3	Same as L1				
L4	Same as L2				
L5	Same as L1				
L6	Same as L2				
L7	Coil, Fixed	1	1129-28	14632	
Q1	Transistor, Low Noise	1	841269	14632	
Q2	Transistor	3	BFR96	73445	
Q3	Same as Q2				
Q4	Same as Q2				
R1	Resistor, Fixed, Film: 1.0 kΩ, 5%, 1/8 W	4	C3-1K-5PCT	24546	
R2	Resistor, Fixed, Film: 4.7 kΩ, 5%, 1/8 W	5	C3-4.7K-5PCT	24546	
R3	Resistor, Fixed, Film: 10Ω, 5%, 1/8 W	1	C3-10R-5PCT	24546	
R4	Resistor, Fixed, Film: 180Ω, 5%, 1/8 W	1	C3-180R-5PCT	24546	
R5	Same as R1				
R6	Same as R2				
R7	Resistor, Fixed, Film: 100Ω, 5%, 1/8 W	3	C3-100R-5PCT	24546	
R8	Resistor, Fixed, Film: 220Ω, 5%, 1/8 W	3	C3-220R-5PCT	24546	
R9	Reisteor, Fixed, Film: 2.7Ω, 5%, 1/8 W	4	CF1/8-2.7 OHMS/J	09021	
R10	Same as R9				
R11	Same as R1				
R12	Same as R2				
R13	Same as R8				
R14	Same as R9				
R15	Resistor, Fixed, Film: 27Ω, 5%, 1/8 W	2	C3-27R-5PCT	24546	
R16	Same as R1				
R17	Same as R2				
R18	Same as R7				
R19	Same as R8				
R20	Same as R9				
R21	Same as R7				
R22	Same as R2				
R23	Same as R15				
U1	Power Divider	1	290558-1	14632	
U1R1	Resistor, Fixed, Film: 100Ω, 5%, 1/8 W	1	CF1/8-100 OHMS/J	09021	

Courtesy of http://BlackRadios.terryo.org

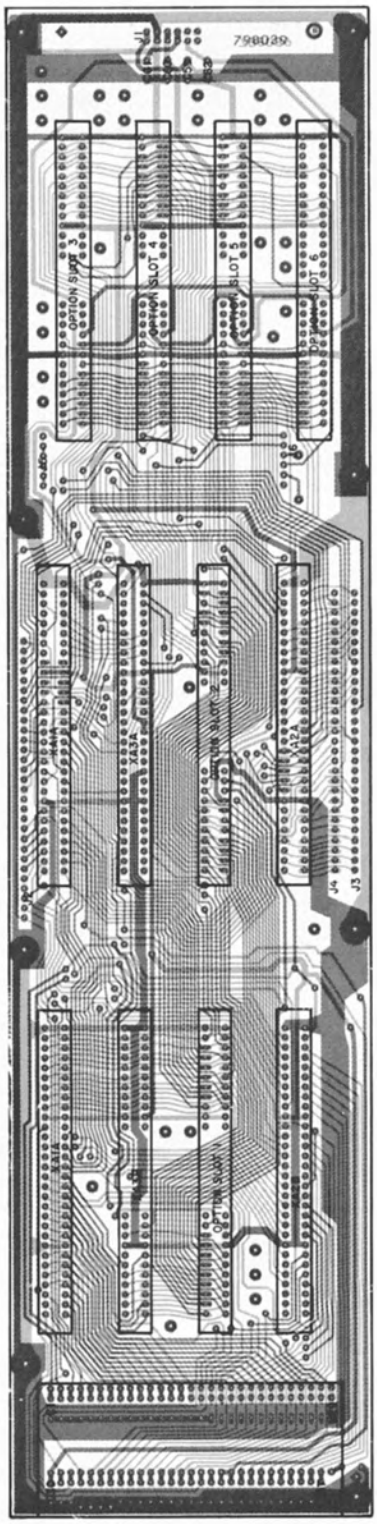

Figure 5-44. Type 798039-7 Digital Motherboard (A5), Location of Components

Courtesy of http://BlackRadios.terryo.org

5.5.4 TYPE 798039-7 DIGITAL MOTHERBOARD

REF DESIG PREFIX A5

REF DESIG	DESCRIPTION	QTY PER ASSY	MANUFACTURER'S PART NO.	MFR. CODE	RECM VENDOR
A1	Receiver Interface	1	794108-6	14632	
A2	Synthesizer Interface	1	796321-1	14632	
A3	Microprocessor	1	796353-1	14632	
C1	Capacitor, Ceramic, Disc: 0.01 µF, 20%, 50 V	58	34453-1	14632	
C2 Thru C32	Same as C1				
C33	Capacitor, Ceramic, Disc: 470 pF, 20%, 1000 V	4	BHD470-20PCT	91418	
C34 Thru C36	Same as C33				
C37 Thru C62	Same as C1				
J1	Connector, Receptacle	4	118470-8	00779	
J2	Post, Feedthru	3	PE7-14045	00779	
J3	Same as J2				
J4	Same as J2				
J5	Same as J1				
J6	Same as J1				
P1	Cable Assembly	1	370415-1	14632	
P2	Cable Assembly	1	370416-1	14632	
XA1A	Motherboard Connector	5	MK30C-13-195	81312	
XA1B	Same as XA1A				
XA2A	Same as XA1A				
XA2B	Same as XA1A				
XA3A	Same as XA1A				
XA3B	Motherboard Connector	3	MK30C-13-195-438	81312	
Option	Same as XA3B				
Option	Same as XA3B				

Courtesy of http://BlackRadios.terryo.org

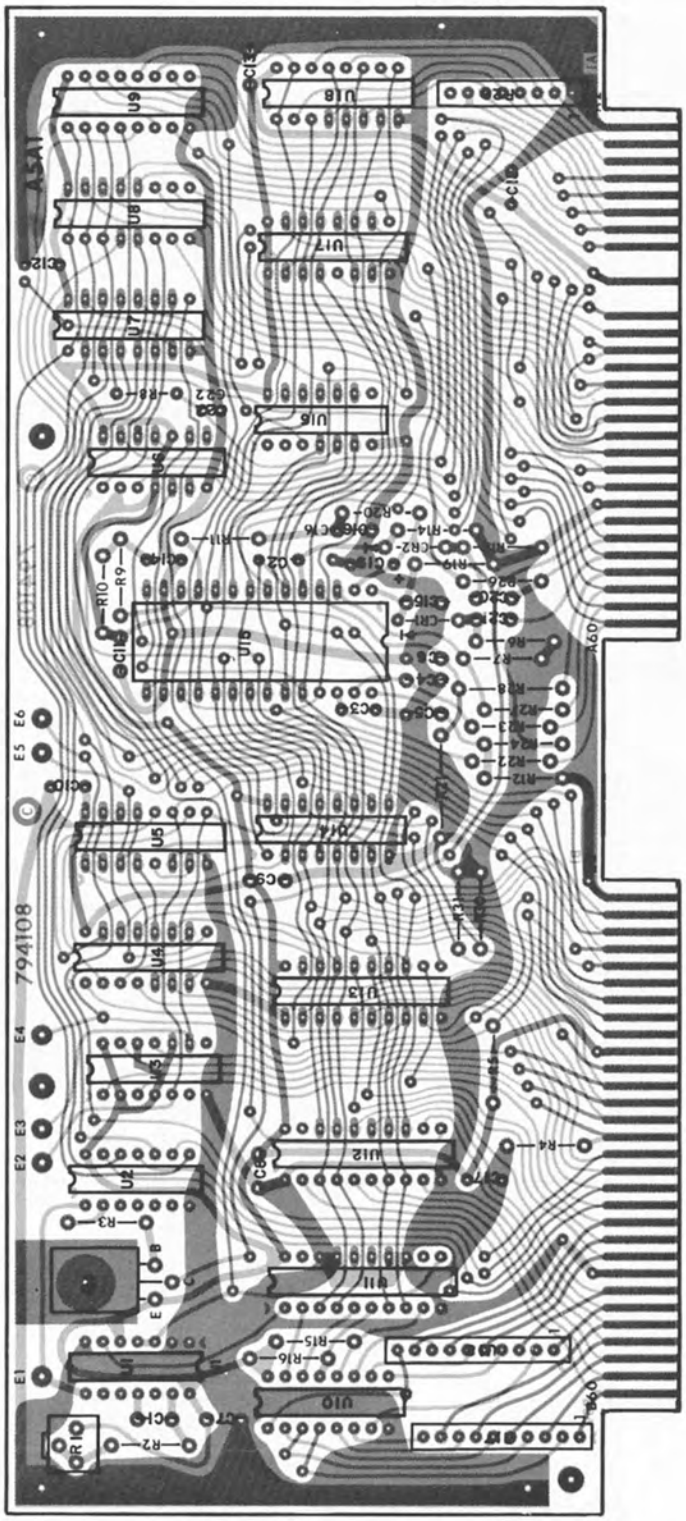

Figure 5-45. Type 794108-X Receiver Interface (A5A1), Location of Components

Courtesy of http://BlackRadios.terryo.org

5.5.4.1 **Type 794108-X Receiver Interface** REF DESIG PREFIX **A5A1**

REF DESIG	DESCRIPTION	QTY PER ASSY	MANUFACTURER'S PART NO.	MFR. CODE	RECM VENDOR
C1	Capacitor, Ceramic, Disc: 0.047 µF, 10%, 100 V	1	CK06BX473K	81349	
C2	Capacitor, Ceramic, Disc: 0.1 µF, 20%, 50 V	13	34475-1	14632	
C3	Same as C2				
C4	Same as C2				
C5	Capacitor, Ceramic, Disc: 1.0 µF, 20%, 50 V	1	8131-050-651-105M	59660	
C6 Thru C13	Same as C2				
C14	Not Used				
C15	Same as C2				
C16	Same as C2				
C17	Capacitor, Ceramic, Disc: 0.01 µF, 20%, 50 V	2	34453-1	14632	
C18	Same as C17				
C19	Capacitor, Electrolytic, Tantalum: 2.2 µF, 20%, 35 V	1	196D225X0035JE3	56289	
C20	Capacitor, Ceramic, Disc: .47 µF, 20%, 50 V	2	34452-1	14632	
C21	Same as C20				
C22	Not Used				
CR1	Diode	3	5082-2800	28480	
CR2	Same as CR1				
CR3	Same as CR1				
CR4	Diode	2	LVA51A	01281	
CR5	Diode	1	1N749A	80131	
CR6	Same as CR4				
Q1	Transistor	1	2N4918	80131	
R1	Resistor, Trimmer, Film: 100 kΩ, 10%, 1/2 W	1	62PAR100K	73138	
R2	Resistor, Fixed, Film: 10 kΩ, 5%, 1/4 W	1	CF1/4-10K/J	09021	
R3	Resistor, Fixed, Film: 470Ω, 5%, 1/4 W	1	CF1/4-470 OHMS/J	09021	
R4	Resistor, Fixed, Film: 47Ω, 5%, 1/4 W	1	CF1/4-47 OHMS/J	09021	
R5	Resistor, Fixed, Film: 47 kΩ, 5%, 1/4 W	3	CF1/4-47K/J	09021	
R6	Not Used				
R7	Resistor, Fixed, Film: 43 kΩ, 5%, 1/4 W	2	CF1/4-43K/J	09021	
R8	Not Used				
R9	Resistor, Fixed, Film: 100Ω, 5%, 1/4 W	1	CF1/4-100 OHMS/J	09021	
R10	Resistor, Fixed, Film: 4.3Ω, 5%, 1/4 W	1	CF1/4-4.3 OHMS/J	09021	
R11	Resistor, Fixed, Film: 1.1 kΩ, 5%, 1/4 W	1	CF1/4-1.1K/J	09021	
R12	Resistor, Fixed, Film: 100 kΩ, 1%, 1/10 W	2	RN55C1003F	81349	
R13	Same as R7				
R14	Resistor, Fixed, Film: 100 kΩ, 5%, 1/4 W	5	CF1/4-100K/J	09021	
R15	Resistor, Fixed, Film: 4.7 kΩ, 5%, 1/8 W	2	CF1/8-4.7K/J	09021	
R16	Same as R15				
R17	Resistor, Network	2	4310R-102-391	80294	
R18	Same as R17				

Courtesy of http://BlackRadios.terryo.org

REF DESIG PREFIX **A5A1**

REF DESIG	DESCRIPTION	QTY PER ASSY	MANUFACTURER'S PART NO.	MFR. CODE	RECM VENDOR
R19	Same as R14				
R20	Resistor, Fixed, Film: 10 kΩ, 1%, 1/10 W	1	RN55C1002F	81349	
R21	Resistor, Fixed, Film: 15 kΩ, 1%, 1/10 W	2	RN55C1502F	81349	
R22	Same as R14				
R23	Same as R14				
R24	Same as R12				
R25	Resistor, Fixed, Film: 2.21 kΩ, 1%, 1/10 W	1	RN55C2211F	81349	
R26	Resistor, Fixed, Film: 30.1 kΩ, 1%, 1/10 W	1	RN55C3012F	81349	
R27	Same as R14				
R28	Same as R21				
R29	Resistor, Network	1	4308R101-473	80294	
R30	Same as R5				
R31	Same as R5				
U1	Integrated Circuit	1	SN74LS122N	01295	
U2	Integrated Circuit	2	SN74LS04N	01295	
U3	Integrated Circuit	2	MM74C74N	27014	
U4	Integrated Circuit	2	MM74C174N	27014	
U5	Integrated Circuit	1	MC14506BCP	04713	
U6	Same as U3				
U7	Integrated Circuit	3	SN74LS138N	01295	
U8	Same as U7				
U9	Same as U7				
U10	Integrated Circuit	1	SN74145N	01295	
U11	Integrated Circuit	3	MM74C374N	27014	
U12	Same as U11				
U13	Same as U11				
U14	Integrated Circuit	2	MM80C97N	27014	
U15	Integrated Circuit	1	ADC0809CCN	27014	
U16	Same as U2				
U17	Same as U4				
U18	Same as U14				

Courtesy of http://BlackRadios.terryo.org

5.5.4.2 Type 796321-1 Synthesizer Interface

REF DESIG PREFIX **A5A2**

REF DESIG	DESCRIPTION	QTY PER ASSY	MANUFACTURER'S PART NO.	MFR. CODE	RECM VENDOR
C1	Capacitor, Ceramic, Disc: 0.1 µF, 20%, 50 V	9	34475-1	14632	
C2	Same as C1				
C3	Capacitor, Mica, Dipped: 15 pF, 5%, 500 V	2	CM05CD150J03	81349	
C4	Same as C1				
C5	Same as C3				
C6	Capacitor, Ceramic, Disc: 0.01 µF, 20%, 50 V	2	34453-1	14632	
C7	Same as C6				
C8 Thru C13	Same as C1				
CR1	Diode	1	1N4446	80131	
Q1	Transistor	1	2N2907/JAN	81350	
R1	Resistor, Fixed, Film: 1 kΩ, 5%, 1/4 W	4	CF1/4-1K/J	09021	
R2	Resistor, Fixed, Film: 470Ω, 5%, 1/4 W	2	CF1/4-470 OHMS/J	09021	
R3	Resistor, Fixed, Film: 1.5 kΩ, 5%, 1/4 W	2	CF1/4-1.5K/J	09021	
R4	Same as R1				
R5	Same as R2				
R6	Same as R1				
R7	Same as R1				
R8	Same as R3				
R9	Resistor, Network: 47 kΩ	2	4308R-101-473	80294	
R10	Not Used				
R11	Not Used				
R12	Resistor, Fixed, Film: 100Ω, 5%, 1/4 W	2	CF1/4-100 OHMS/J	09021	
R13	Same as R12				
R14	Resistor, Fixed, Film: 47 kΩ, 5%, 1/4 W	3	CF1/4-47K/J	09021	
R15	Resistor, Fixed, Film: 22 kΩ, 5%, 1/4 W	1	CF1/4-22K/J	09021	
R16	Resistor, Fixed, Film: 33 kΩ, 5%, 1/4 W	1	CF1/4-33K/J	09021	
R17	Same as R9				
R18	Same as R14				
R19	Same as R14				
S1	Switch, Dip	1	76PSB06S	81073	
S2	Switch, Dip	1	76PSB08S	81073	
U1	Integrated Circuit	2	MM74C74N	27014	
U2	Same as U1				
U3	Integrated Circuit	1	MM74C10N	27014	
U4	Integrated Circuit	3	MM80C97N	27014	
U5	Integrated Circuit	10	MM74C374N	27014	
U6 Thru U11	Same as U5				
U12	Integrated Circuit	1	170149	14632	
U13	Integrated Circuit	2	SN74LS04N	01295	

Courtesy of http://BlackRadios.terryo.org

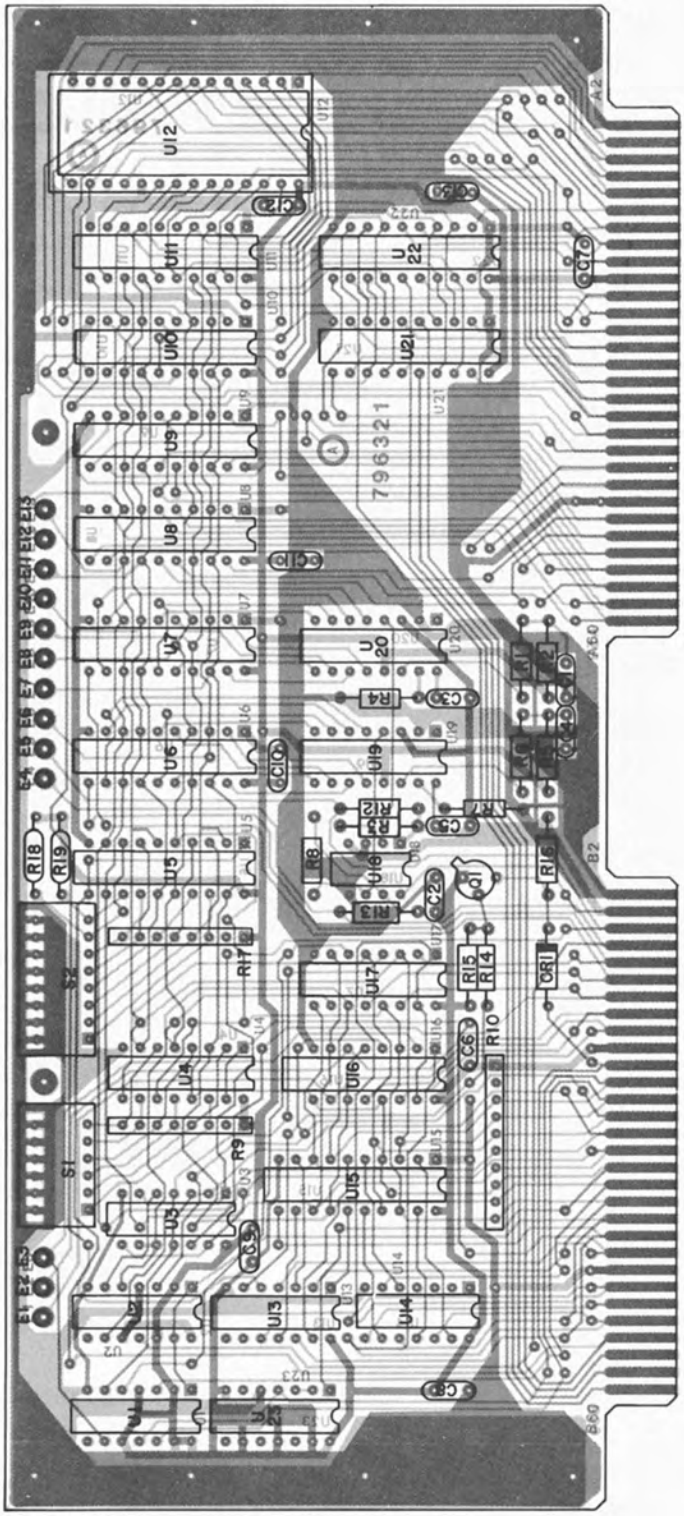

Figure 5-46. Type 796321-1 Synthesizer Interface (A5A2), Location of Components

Courtesy of http://BlackRadios.terryo.org

REF DESIG PREFIX **A5A2**

REF DESIG	DESCRIPTION	QTY PER ASSY	MANUFACTURER'S PART NO.	MFR. CODE	RECM VENDOR
U14	Same as U13				
U15	Same as U5				
U16	Same as U4				
U17	Same as U4				
U18	Integrated Circuit	1	MC1458N	18324	
U19	Integrated Circuit	2	MC1408L6	04713	
U20	Same as U19				
U21	Same as U5				
U22	Same as U5				
U23	Integrated Circuit	1	MM74C14N	27014	

Courtesy of http://BlackRadios.terryo.org

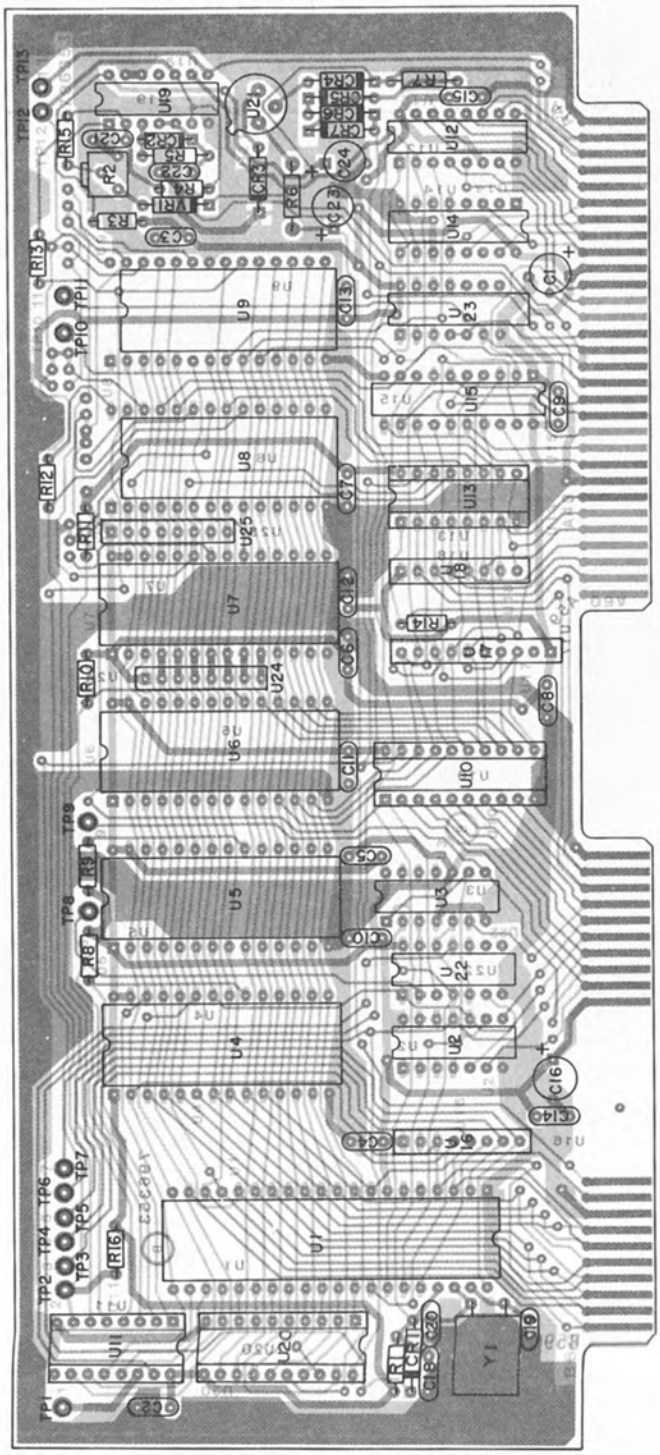

Figure 5-47. Type 796353-X Microprocessor (A5A3), Location of Components

Courtesy of http://BlackRadios.terryo.org

5.5.4.3 **Type 796353-X Microprocessor** REF DESIG PREFIX **A5A3**

REF DESIG	DESCRIPTION	QTY PER ASSY	MANUFACTURER'S PART NO.	MFR. CODE	RECM VENDOR
C1	Capacitor, Electrolytic, Tantalum: 22µF, 20%, 15 V	2	196D226X0015KE3	56289	
C2	Capacitor, Ceramic, Disc: .1 µF, 20%, 50 V	8	34475-1	14632	
C3 Thru C9	Same as C2				
C10	Capacitor, Ceramic, Disc: .01 µF, 20%, 50 V	9	34453-1	14632	
C11 Thru C15	Same as C10				
C16	Same as C1				
C17	Capacitor, Micro-Q, Dip	1	Q-14.02	31745	
C18	Same as C10				
C19	Capacitor, Ceramic, Disc: 24 pF, 5%, 50 V	2	8111-050-COGO-240J	59660	
C20	Same as C19				
C21	Same as C10				
C22	Same as C10				
C23	Capacitor, Electrolytic, Tantalum: 1 µF, 20%, 35 V	1	196D105X0035HE3	56289	
C24	Capacitor, Electrolytic, Tantalum: 10 µF, 20%, 20 V	1	196D106X0020JE3	56289	
CR1	Diode	3	1N270	80131	
CR2	Diode	1	5082-2800	28480	
CR3	Diode	3	1N4003	80131	
CR4	Same as CR3				
CR5	Same as CR1				
CR6	Same as CR3				
CR7	Same as CR1				
R1	Resistor, Fixed, Film: 10 kΩ, 5%, 1/8 W	2	CF1/8-10K/J	09021	
R2	Resistor, Trimmer, Film: 5 kΩ, 10%, 1/2 W	1	62PAR5K	73138	
R3	Resistor, Fixed, Film: 100 kΩ, 5%, 1/8 W	1	CF1/8-100K/J	09021	
R4	Resistor, Fixed, Film: 200 kΩ, 5%, 1/8 W	1	CF1/8-200K/J	09021	
R5	Resistor, Fixed, Film: 6.2 MΩ, 5%, 1/4 W	1	CF1/4-6.2M/J	09021	
R6	Resistor, Fixed, Film: 27Ω, 5%, 1/4 W	1	CF1/4-27 OHMS/J	09021	
R7	Resistor, Fixed, Film: 220Ω, 5%, 1/4 W	1	CF1/4-220 OHMS/J	09021	
R8	Resistor, Fixed, Film: 1.0 k, 5%, 1/8 W	8	CF1/8-1.0K/J	09021	
R9 Thru R14	Same as R8				
R15	Same as R1				
R16	Same as R8				
TP1	Terminal, Miniature	13	2010B1	88245	
TP2 Thru TP13	Same as TP1				
U1	Integrated Circuit	1	MC68B09P	04713	
U2	Integrated Circuit	2	SN74ALS04N	01295	

Courtesy of http://BlackRadios.terryo.org

REF DESIG PREFIX **A5A3**

REF DESIG	DESCRIPTION	QTY PER ASSY	MANUFACTURER'S PART NO.	MFR. CODE	RECM VENDOR
U3	Integrated Circuit	1	SN74LS32N	01295	
U4 Thru U7	See Appropriate Dash No. Parts List				
U8	Integrated Circuit	2	HM6116LP-4	58014	
U9	Same as U8				
U10	Integrated Circuit	1	MD74SC245AC	36665	
U11	Integrated Circuit	1	841148	14632	
U12	Integrated Circuit	1	SN74ALS138N	01295	
U13	Integrated Circuit	1	841147	14632	
U14	Integrated Circuit	1	CD4040BE	02735	
U15	Integrated Circuit	1	MM74C374N	27014	
U16	Resistor, Network	1	4308R-101-103	73138	
U17	Resistor, Network	1	765-1-R22K	73138	
U18	Resistor, Network	1	4308R-101-102	80294	
U19	Integrated Circuit	1	MM74C00N	27014	
U20	Programmed Shunt (Dip)	1	180246-1	14632	
U21	Voltage Regulator: +5 V	1	LM340LAH-5.0	27014	
U22	Integrated Circuit	1	SN74ALS00N	01295	
U23	Same as U2				
U24	Resistor, Network	2	4308R-101-104	80294	
U25	Same as U24				
VR1	Voltage Regulator: 4.3 V	1	1N749A	80131	
XU1	Socket, Integrated Circuit	1	54OAG10D	91506	
XU4	Socket, Integrated Circuit	4	528AG10D	91506	
XU5	Same as XU4				
XU6	Same as XU4				
XU7	Same as XU4				
XU8	Socket, Integrated Circuit	2	524-AG10D	91506	
XU9	Same as XU8				
XU10	Socket, Integrated Circuit	2	ICN-203-S3-T	06776	
XU11	Socket, Integrated Circuit	2	ICN-163-S3-T	06776	
XU13	Same as XU11				
XU20	Same as XU10				
Y1	Crystal Quartz	1	91805-29	14632	

Courtesy of http://BlackRadios.terryo.org

5.5.5 TYPE 794190-2 FRONT PANEL DISPLAY AND CONTROL REF DESIG PREFIX A6

REF DESIG	DESCRIPTION	QTY PER ASSY	MANUFACTURER'S PART NO.	MFR. CODE	RECM VENDOR
C1	Capacitor, Ceramic, Disc: 0.1 µF, 20%, 50 V	2	34475-1	14632	
C2	Capacitor, Electrolytic, Tantalum: 1.0 µF, 10%, 35 V	2	CS13BF105K	81349	
C3	Same as C1				
C4	Same as C2				
C5	Capacitor, Electrolytic, Tantalum: 200 µF, 20%, 15 V	3	MTP207M015P1C	76055	
C6	Same as C5				
C7	Same as C5				
DS1	LED Display, .43 Red	8	5082-7651	28480	
DS2 Thru DS8	Same as DS1				
DS9	LED Display, .3 RED	9	5082-7611	28480	
DS10 Thru DS15	Same as DS9				
DS16	LED Display, Red	1	5082-7616	28480	
DS17	Same as DS9				
DS18	Same as DS9				
DS19	LED, Red	32	HLMP-1301	28480	
DS20 Thru DS48	Same as C19				
DS49	Not Used				
DS50	Same as DS19				
DS51	Same as DS19				

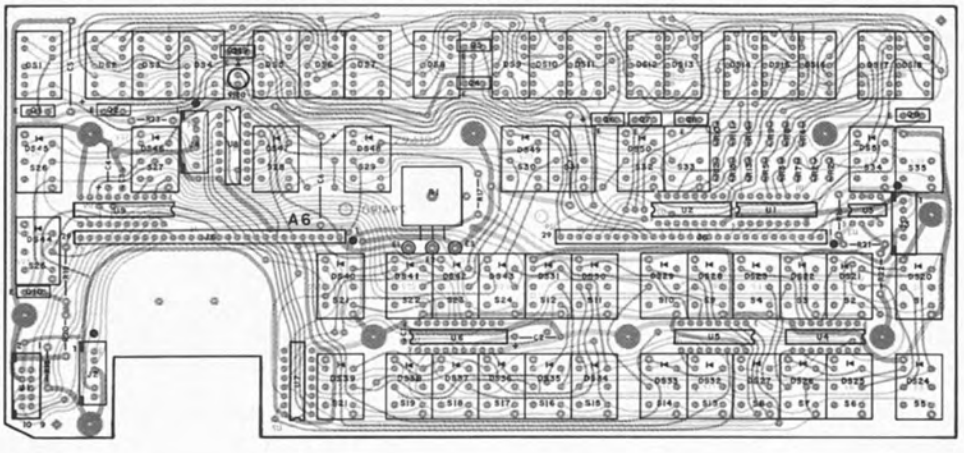

Figure 5-48. Type 794190-2 Front Panel Display and Control (A6), Location of Components

Courtesy of http://BlackRadios.terryo.org

REF DESIG PREFIX **A6**

REF DESIG	DESCRIPTION	QTY PER ASSY	MANUFACTURER'S PART NO.	MFR. CODE	RECM VENDOR
J1	Connector, Receptacle	1	87586-1	00779	
J2	Header Assembly	1	170156-1	14632	
J3	Header Assembly	1	170156-3	14632	
J4	Header Assembly	1	170156-2	14632	
J5	Header Assembly	2	2-87220-9	00779	
J6	Same as J5				
Q1	Transistor	9	2N4918	80131	
Q2 Thru Q9	Same as Q1				
Q10	Transistor	1	2N4921	80131	
R1	Resistor, Variable, Composition: 10 kΩ, 10%, 1 W	1	70A3N056L103U	01121	
R2	Resistor, Fixed, Composition: 100Ω, 5%, 1/2 W	14	RCR20G101JS	81349	
R3 Thru R15	Same as R2				
R16	Resistor, Fixed, Film: 6.2Ω, 5%, 1/4 W	1	CF1/4-6.2 OHMS/J	09021	
R17	Resistor, Fixed, Film: 1 kΩ, 5%, 1/4 W	1	CF1/4-1K/J	09021	
R18	Resistor, Fixed, Film: 47 kΩ, 5%, 1/4 W	2	CF1/4-47K/J	09021	
R19	Resistor, Fixed, Film: 200Ω, 1%, 1/4 W	1	RN60D2000F	81349	
R20	Resistor, Fixed, Film: 270Ω, 5%, 1/4 W	1	CF1/4-270 OHMS/J	09021	
R21	Same as R18				
R22	Resistor, Fixed, Film: 10 kΩ, 5%, 1/4 W	1	CF1/4-10K/J	09021	
R23	Resistor, Fixed, Film: 3.0Ω, 5%, 1/4 W	1	CF1/4-3.0 OHMS/J	09021	
S1	Switch, Pushbutton	33	500130 (SERU)	31918	
S2 Thru S28	Same as S1				
S29	Same as S1				
S30	Not Used				
S31	Not Used				
S32 Thru S35	Same as S1				
U1	Integrated Circuit	2	ULN2003A	56289	
U2	Same as U1				
U3	Integrated Circuit	1	MC1458N	18324	
U4	Integrated Circuit	4	DM8834N	02735	
U5	Same as U4				
U6	Integrated Circuit	2	MM74C923N	27014	
U7	Same as U4				
U8	Same as U4				
U9	Same as U6				
U10	Resistor Network	1	765-1-R1K	73138	

Courtesy of http://BlackRadios.terryo.org

5.5.6 TYPE 794141-1 PHONE JACK ASSEMBLY

REF DESIG PREFIX **A7**

REF DESIG	DESCRIPTION	QTY PER ASSY	MANUFACTURER'S PART NO.	MFR. CODE	RECM VENDOR
FL1	Filter	1	51-722-001	33095	
J1	Connector, Phone Jack	1	CN11	82389	

Courtesy of http://BlackRadios.terryo.org

5.5.7 TYPE 794128-1 ANTENNA SWITCH

REF DESIG PREFIX **A8**

REF DESIG	DESCRIPTION	QTY PER ASSY	MANUFACTURER'S PART NO.	MFR. CODE	RECM VENDOR
A1	RF Switch	1	270450-1	14632	
A2	Switch Driver	1	270451-1	14632	
C1	Capacitor, Ceramic, Feedthru: 1000 pF, 500 V	4	54-794-009-102W	33095	
C2 Thru C4	Same as C1				
FB1	Ferrite Bead	12	56-590-65-4A	02114	
FB2 Thru FB12	Same as FB1				
J1	Connector, Receptacle	2	3052-0000-10	26805	
J2	Same as J1				
J3	Connector, Receptacle	2	1012-1511-000	19505	
J4	Same as J3				
P1	Connector, Plug	1	1-87499-1	00779	

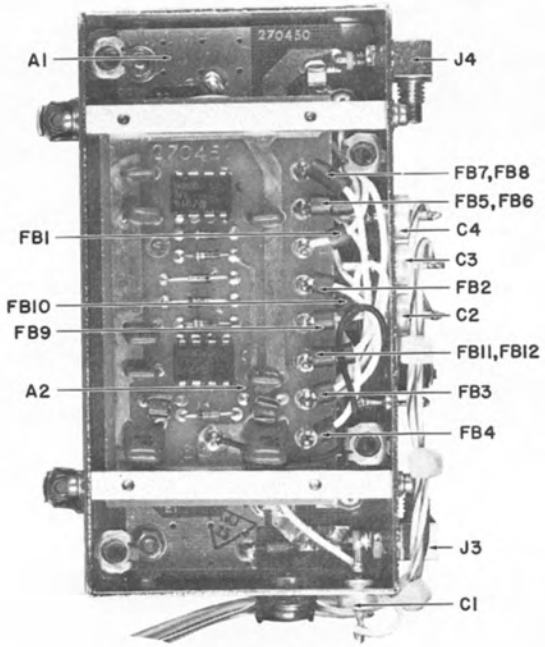

Figure 5-49. Type 724128-1 Antenna Switch (A8), Top View, Location of Components

Courtesy of http://BlackRadios.terryo.org

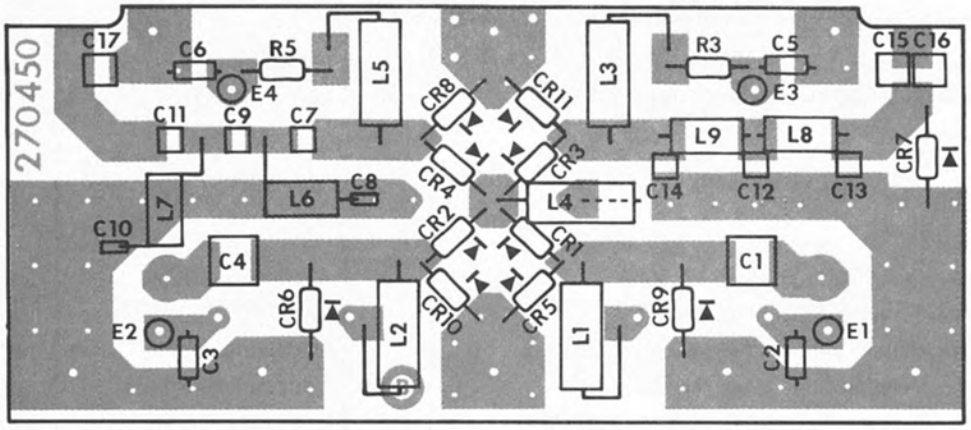

Figure 5-50. Part 270450-1 RF Switch (A8A1), (Top Side), Location of Components

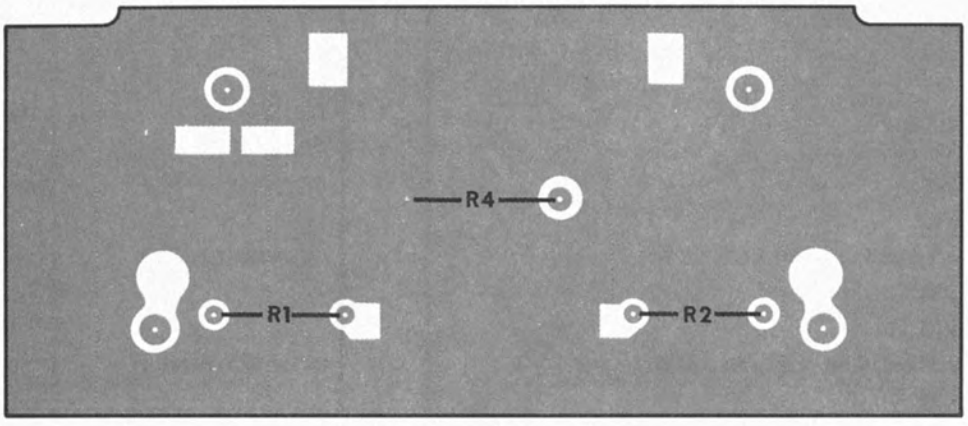

Figure 5-51. Part 270450-1 RF Switch (A8A1), (Bottom Side), Location of Components

Courtesy of http://BlackRadios.terryo.org

5.5.7.1 **Part 270450-1 RF Switch** REF DESIG PREFIX **A8A1**

REF DESIG	DESCRIPTION	QTY PER ASSY	MANUFACTURER'S PART NO.	MFR. CODE	RECM VENDOR
C1	Capacitor, Ceramic, Chip: 0.056 µF, 50 V	2	C2225C563P5XAH	05397	
C2	Capacitor, Ceramic, Disc: 1000 pF, 10%, 100 V	4	8121-100X7R0-102K	59660	
C3	Same as C2				
C4	Same as C1				
C5	Same as C2				
C6	Same as C2				
C7	Capacitor, Ceramic, Chip: 13 pF, 2%, 500 V	1	ATC700B130GP500X	29990	
C8	Capacitor, Ceramic, Chip: 10 pF, 2%, 500 V	1	ATC700B100GP500X	29990	
C9	Capacitor, Ceramic, Chip: 4.7 pF, ±.25 pF, 500 V	1	ATC700B4R7CP500X	29990	
C10	Capacitor, Ceramic, Chip: 33 pF, 2%, 500 V	1	ATC700B330GP500X	29990	
C11	Capacitor, Ceramic, Chip: 8.2 pF, ±0.25 pF, 500 V	2	ATC700B8R2CP500X	29990	
C12	Same as C11				
C13	Capacitor, Ceramic, Chip: 4.3 pF, ±0.5 pF, 500 V	2	ATC700B4R3DP500X	29990	
C14	Same as C13				
C15	Capacitor, Ceramic, Chip: 0.5 pF, 10%, 50 Vdc	1	1210-050-X7R-503KS	55969	
C16	Not Used				
C17	Capacitor, Ceramic, Chip: 0.5 pF, ±0.1 pF, 500 V	1	ATC100B0R5BP500X	29990	
CR1	Diode	11	841320	14632	
CR2 Thru CR11	Same as CR1				
L1	Coil, Fixed	5	170134-1	14632	
L2 Thru L5	Same as L1				
L6	Coil, Fixed	1	170158-1	14632	
L7	Coil, Fixed	1	170159-1	14632	
L8	Coil, Fixed	2	170160-1	14632	
L9	Same as L8				
R1	Resistor, Fixed, Film: 560Ω, 5%, 1/8 W	4	CF1/8-560 OHMS/J	09021	
R2	Same as R1				
R3	Same as R1				
R4	Resistor, Fixed, Film: 680Ω, 5%, 1/4 W	1	CF1/4-680 OHMS/J	09021	
R5	Same as R1				
R6	Resistor, Fixed, Film: 5.62 kΩ, 1%, 1/10 W	2	RN55C5621F	81349	
R7	Same as R6				

Courtesy of http://BlackRadios.terryo.org

5.5.7.2 **Part 270451-1 Switch Driver** REF DESIG PREFIX **A8A2**

REF DESIG	DESCRIPTION	QTY PER ASSY	MANUFACTURER'S PART NO.	MFR. CODE	RECM VENDOR
C1	Capacitor, Ceramic, Disc: 0.1 µF, 20%, 50 V	6	34475-1	14632	
C2 Thru C6	Same as C1				
C7	Capacitor, Ceramic, Disc: 0.47 µF, 20%, 50 V	2	34452-1	14632	
C8	Same as C7				
CR1	Diode	2	1N4446	80131	
CR2	Same as CR1				
L1	Coil, Fixed	2	16209-12	14632	
L2	Same as L1				
R1	Resistor, Fixed, Film: 1 kΩ, 5%, 1/8 W	2	CF1/8-1K/J	09021	
R2	Same as R1				
R3	Resistor, Fixed, Composition: 5.1 kΩ, 5%, 1/8 W	1	RCR05G512JS	81349	
R4	Resistor, Fixed, Film: 180Ω, 5%, 1/4 W	1	CF1/4-180 OHMS/J	09021	
U1	Integrated Circuit	2	LM358N	27014	
U2	Same as U1				

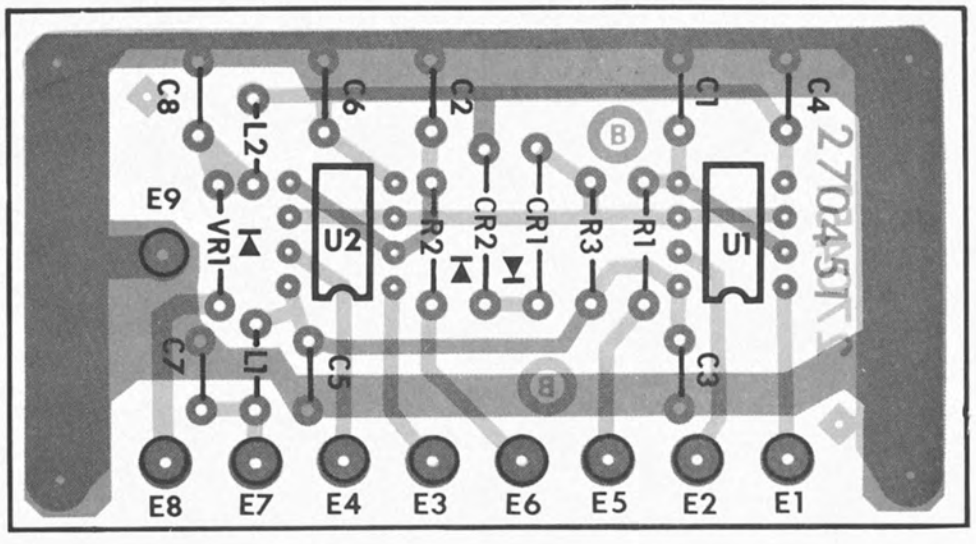

Figure 5-52. Part 270451-1 Switch Driver (A8A2), Location of Components

Courtesy of http://BlackRadios.terryo.org

Courtesy of http://BlackRadios.terryo.org

SECTION VI

SCHEMATICS

Courtesy of http://BlackRadios.terryo.org

Courtesy of http://BlackRadios.terryo.org

NOTES:
1. UNLESS OTHERWISE SPECIFIED:
   a) RESISTANCE IS IN OHMS, ±5%, 1/4W.
   b) CAPACITANCE IS IN μF.
   c) INDUCTANCE IS IN μH.
2. ONLY PINS USED BY EACH MODULE ARE SHOWN. SOME OTHER PINS OF XA6, XA13, AND XA17-21 HAVE SIGNALS CONNECTED FOR PRINTED WIRING SIMPLIFICATION.
3. (S) INDICATES THAT PIN IS USED FOR COAX SHIELD.
4. THE UNUSED PINS OF U7 ARE CONNECTED TO XA6 AS SHOWN, FOR WIRE WRAP AVAILABILITY.
5. INSTALL JUMPER PLUGS TO CONNECT E34 TO E35 & E37 TO E38 FOR STANDARD OPERATION. INSTALL JUMPER PLUGS TO CONNECT E34 TO E36 & E37 TO E39 (DASHED LINES) FOR DIGITAL/AUDIO/VIDEO
6. SSB BYPASS (TYPE 798074-1) IS INSTALLED IF SSB DEMODULATOR IS NOT USED.
7. COAX CONNECTIONS BETWEEN P.C. CONNECTORS ARE WIRE WRAPPED.
8. DASHED LINE SHOWS 20-500 MHz INPUT CONNECTION WHEN THE FREQUENCY EXTENDER 861XB/FE, 861XB/FEX IS NOT IMPLEMENTED.
9. DIFFERENCE BETWEEN TYPES IS SHOWN IN TABLE A, SH 3.
10. CONNECTIONS MARKED WITH AN ASTERISK * ARE WIRE WRAPPED. (SEE TABLE B)

TABLE B

W/W CONN NO	CONN	- PIN NO.	CONN	- PIN NO.
1	XA8	- 52	XA15	- 41
2	XA18	- 6	XA16	- 19
3	XA15	- 58	XA21	- 7
4	XA21	- 7	XA20	- 7
5	XA20	- 7	XA19	- 7
6	XA19	- 7	XA18	- 7
7	XA18	- 7	XA17	- 7
8	XA17	- 7	XA9	- 5
9	XA9	- 5	XA10	- 5
10	XA10	- 5	XA11	- 5
11	XA11	- 5	XA12	- 5
12	XA12	- 5	XA13	- 5
13	XA15	- 57	XA8	- 20

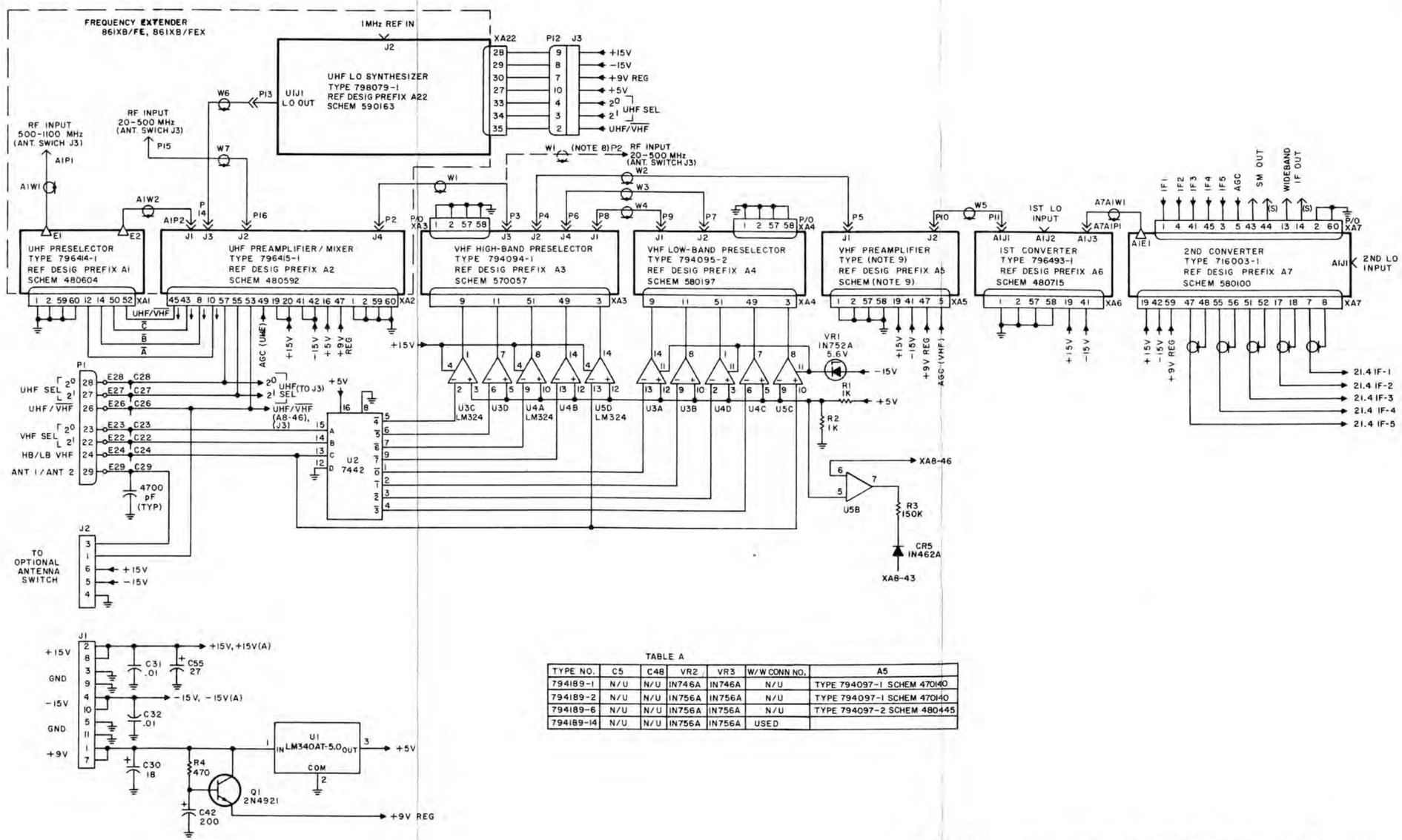

TABLE A

TYPE NO.	C5	C48	VR2	VR3	W/W CONN NO.	A5
794189-1	N/U	N/U	IN746A	IN746A	N/U	TYPE 794097-1 SCHEM 470140
794189-2	N/U	N/U	IN756A	IN756A	N/U	TYPE 794097-1 SCHEM 470140
794189-6	N/U	N/U	IN756A	IN756A	N/U	TYPE 794097-2 SCHEM 480445
794189-14	N/U	N/U	IN756A	IN756A	USED	

Figure 6-1. Type 794189-2, RF/IF Motherboard (A3), Schematic Diagram 490193 (V) (Sheet 1 of 2)

Courtesy of http://BlackRadios.terryo.org

IF BW	IF AMPL (A9-A13)		FM DEMOD (A17 A21)	
	TYPE	SCHEM	TYPE	SCHEM
1.5 kHz	724006-22	380742	794106-10	380741
6.4 kHz	724006-18	370348	794106-3	370347
4 kHz	724006-23	380757	794106-11	380755
10 kHz	724006-1	370348	794106-1	370347
15 kHz	724006-21	370348	794106-8	370347
20 kHz	724006-2	370348	794106-2	370347
25 kHz	724006-17	370348	794106-7	370347
30 kHz	724006-10	370348	794106-5	370347
40 kHz	724006-8	370348	794107-5	370346
50 kHz	724006-3	370348	794107-1	370346
60 kHz	724006-24	380758	794107-13	380756
75 kHz	724006-9	381291	794107-6	370346
100 kHz	724006-4	370348	794107-2	370346
250kHz	724006-5	370348	794107-3	370346
300kHz	724006-6	370348	794107-4	370346
500kHz	724019-1	470305	794104-2	470157
1 MHz	724007-1	470164	794104-1	470157
2 MHz	724007-2	470164	794105-1	470158
4 MHz	724008-1	370349	794105-2	470158
8 MHz	796337-1	380513	794105-4	470158
3.2 kHz/10kHz	726009-1	480506	796354-1	480549
6.4kHz/10kHz	726009-5	480506	796354-3	480549
10 kHz/20kHz	726009-11	480506	796354-7	480549
20 kHz/50kHz	726009-2	480506	796354-2	480549
30kHz/50kHz	726009-8	480506	796355-5	480549
50kHz/100kHz	726009-12	480506	796355-5	480546
100kHz/300kHz	726009-4	480506	796355-2	480546
250kHz/500kHz	726009-13	480506	796356-3	480518
500kHz/1000kHz	726010-2	480507	796356-2	480518
1000kHz/2000kHz	726010-3	480507	796357-1	480522
2000kHz/4000kHz	726010-4	480507	796357-2	480522
4000kHz/8000kHz	726010-6	480507	796357-4	480522

IF BW	IF AMPL (A9-A13)		FM DEMOD (A17-A21)	
	TYPE	SCHEM	TYPE	SCHEM
6 kHz	724006-7	381291	794106-3	370347
10 kHz	724006-1	381291	794106-1	370347
20 kHz	724006-2	381291	794106-2	370347
40 kHz	724006-8	381291	794107-5	370346
50 kHz	724006-3	381291	794107-1	370346
75 kHz	724006-9	381291	794107-6	370346
100 kHz	724006-4	381291	794107-2	370346
250 kHz	724006-5	381291	794107-3	370346
300 kHz	724006-6	381291	794107-4	370346
500 kHz	726013-1	380771	794104-2	470157
1 MHz	726013-2	380771	794104-1	470157
2 MHz	726013-3	380771	794105-1	470158
4 MHz	726013-4	380771	794105-2	470158
3.2 kHz	724006-16	380456	794106-6	380455

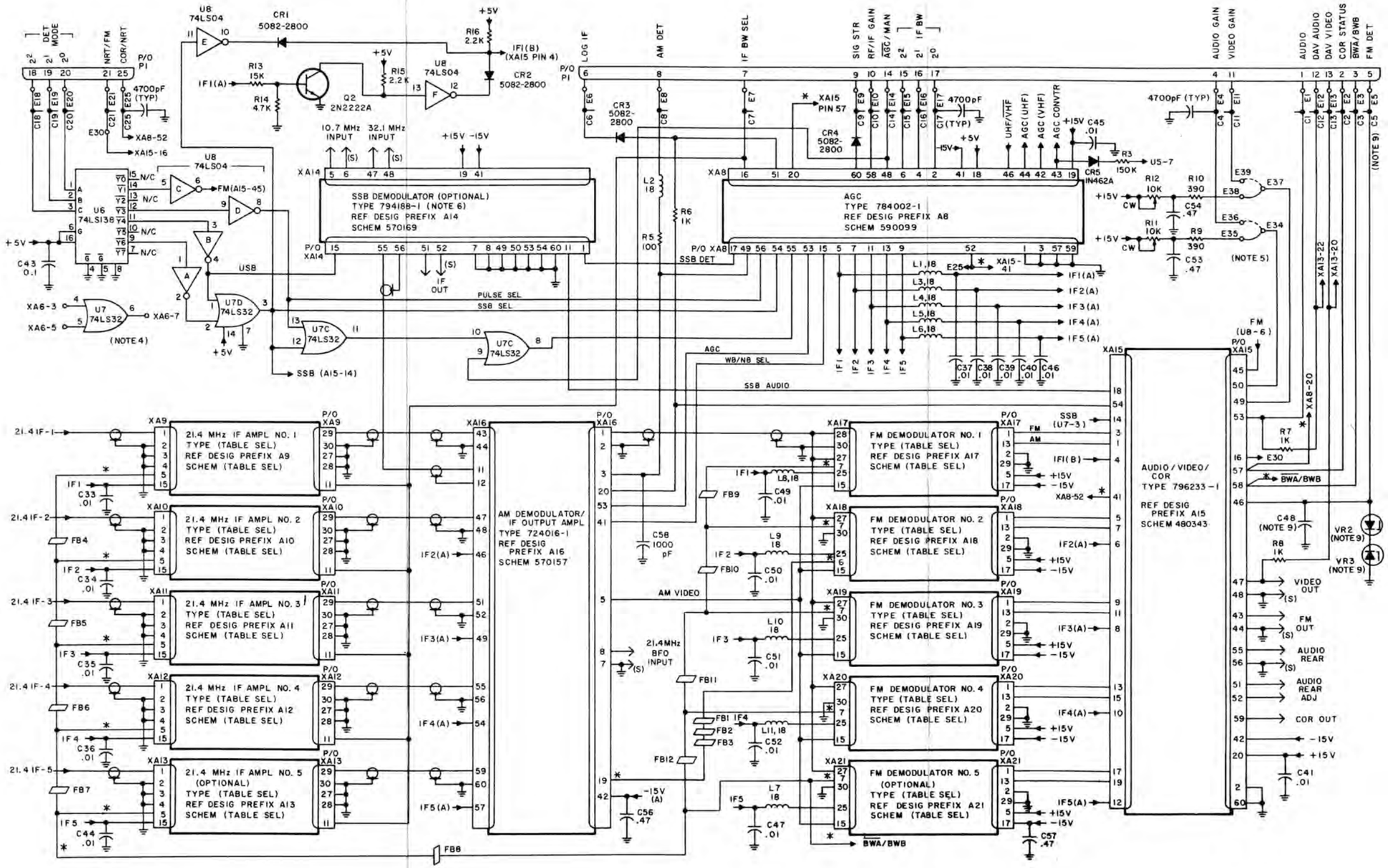

Figure 6-1. Type 794189-2, RF/IF Motherboard (A3), Schematic Diagram 490193 (V) (Sheet 2 of 2)

Courtesy of http://BlackRadios.terryo.org

NOTES:
1. UNLESS OTHERWISE SPECIFIED:
   a) RESISTANCE IS IN OHMS, ± 5 %, 1/8W.
   b) CAPACITANCE IS IN pF.
2. C23, C25, C30, C31, C33, C34, C38, C39, ARE TO BE SHOWN, BUT DOCUMENTED AS NOT USED.

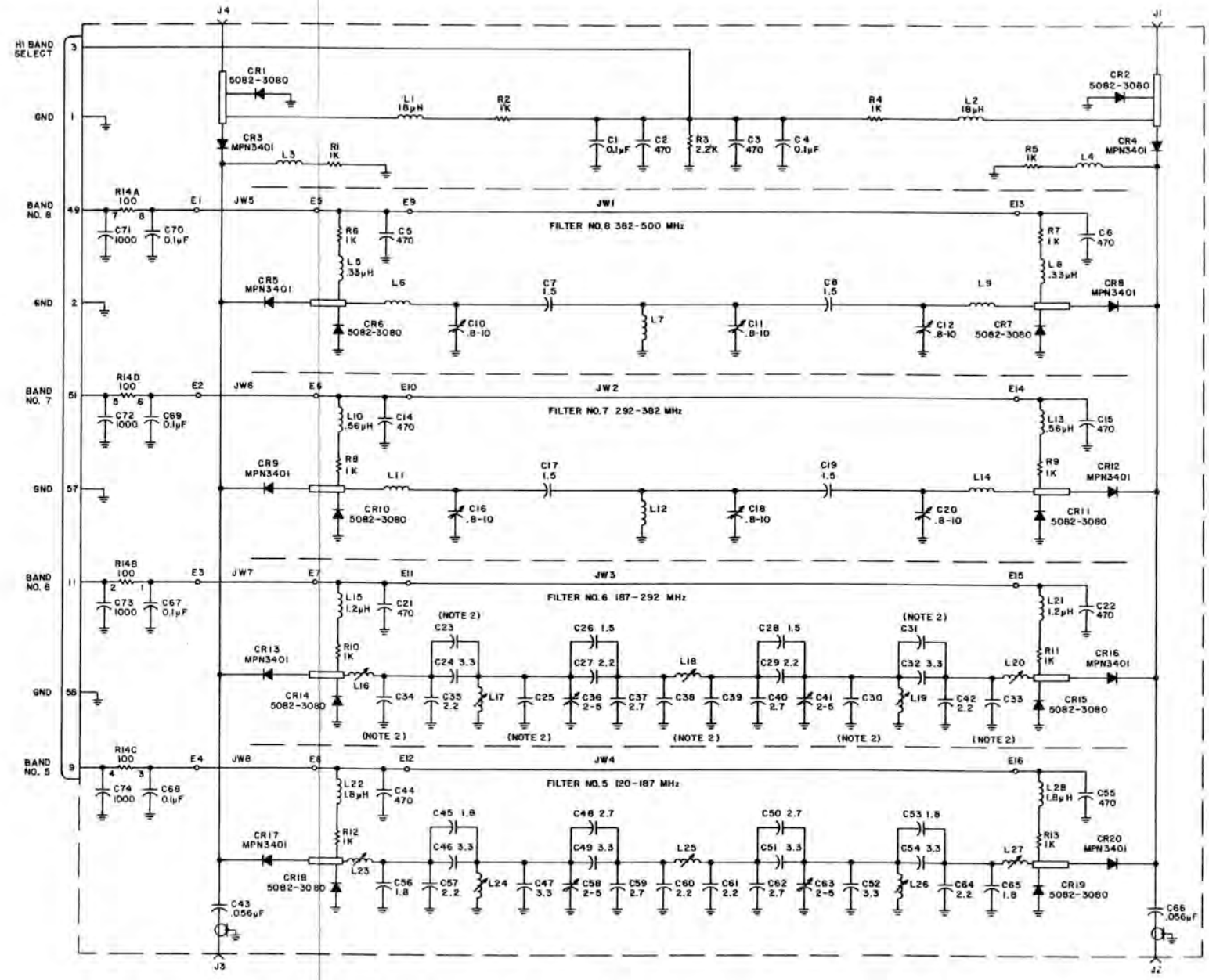

Figure 6-2. Type 794094-1, VHF High-band Preselector (A3A3), Schematic Diagram 570057 (D)

Courtesy of http://BlackRadios.terryo.org

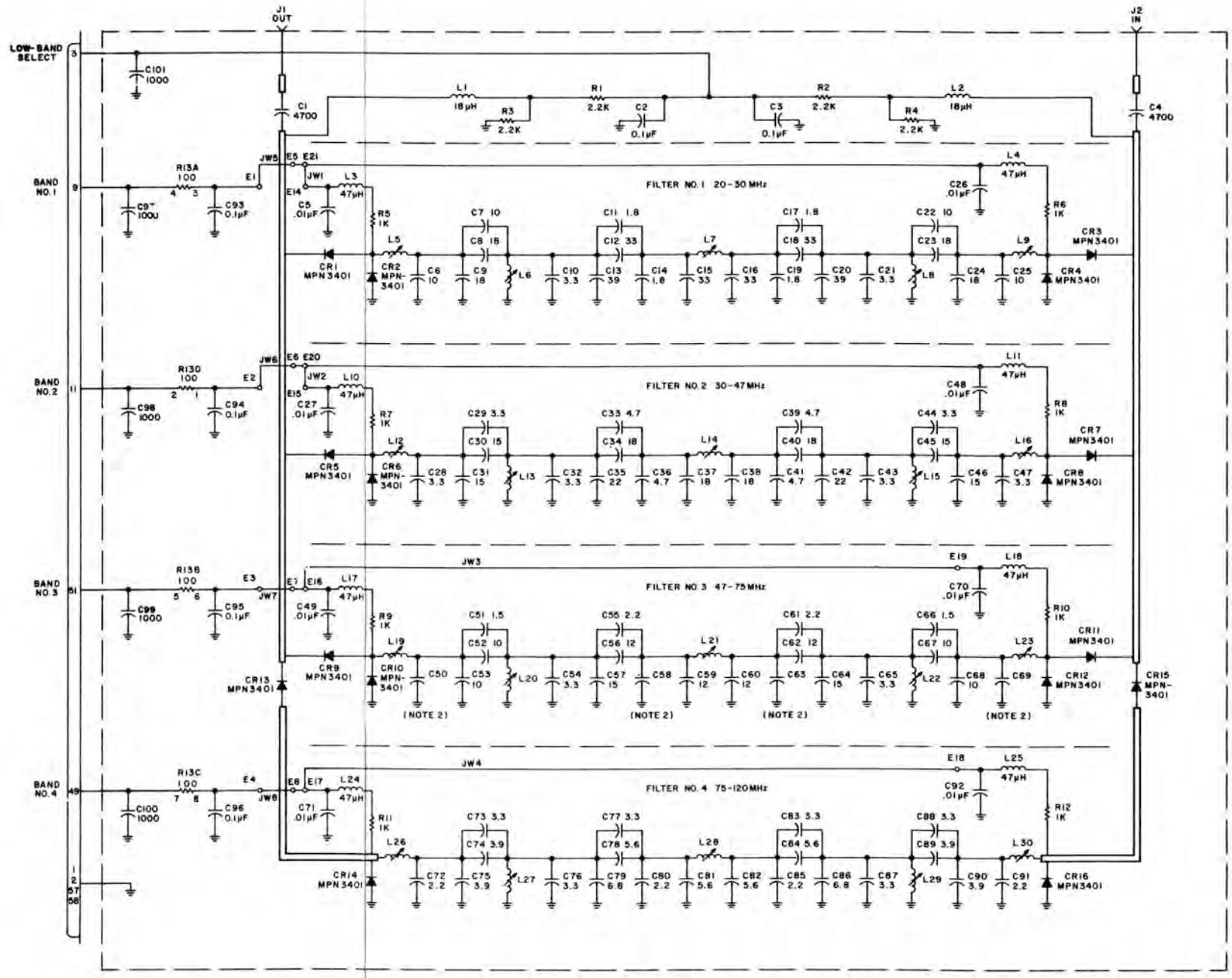

NOTES:

1. UNLESS OTHERWISE SPECIFIED:
   a) RESISTANCE IS IN OHMS, ± 5%, 1/8W.
   b) CAPACITANCE IS IN μF.
2. C50, C58, C63, C69 ARE TO BE SHOWN BUT DOCUMENTED AS NOT USED.

Figure 6-3. Type 794095-1, VHF Low-band Preselector (A3A4), Schematic Diagram 570058 (B)

Courtesy of http://BlackRadios.terryo.org

NOTE:
1. UNLESS OTHERWISE SPECIFIED:
   a) RESISTANCE IS IN OHMS, ±1%, 1/10W.
   b) CAPACITANCE IS IN μF.
2. L2 PARASITIC OF C2.

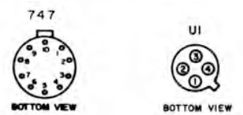

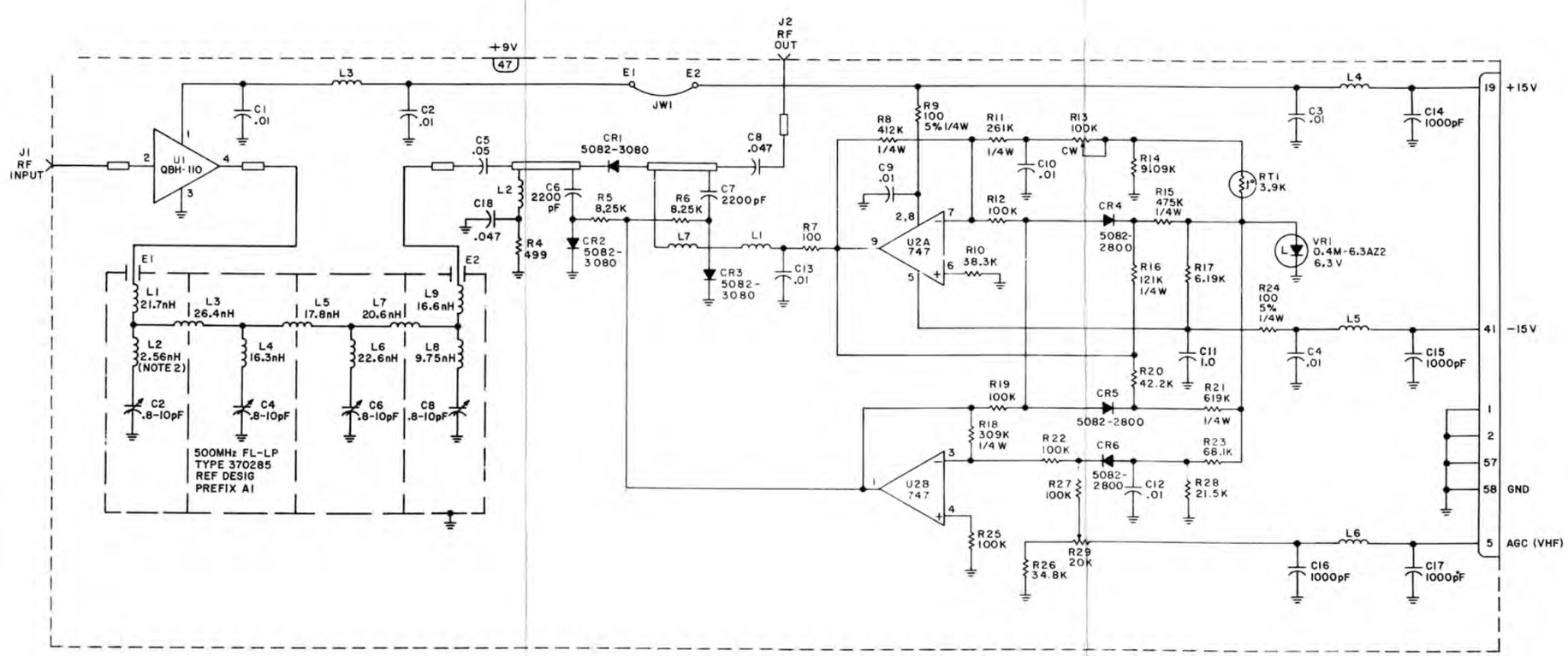

Figure 6-3. Type 794097-1, Preamplifier (A3A5), Schematic Diagram 480445 (D)

Courtesy of http://BlackRadios.terryo.org

NOTES:
1. UNLESS OTHERWISE SPECIFIED:
   a) RESISTANCE IS IN OHMS, ±5%, 1/4W.
   b) CAPACITANCE IS IN pF.
   c) INDUCTANCE IS IN µH.
2. NOMINAL VALUE, FINAL VALUE FACTORY SELECTED.

M2T, A17, QBH-126

BOTTOM VIEW

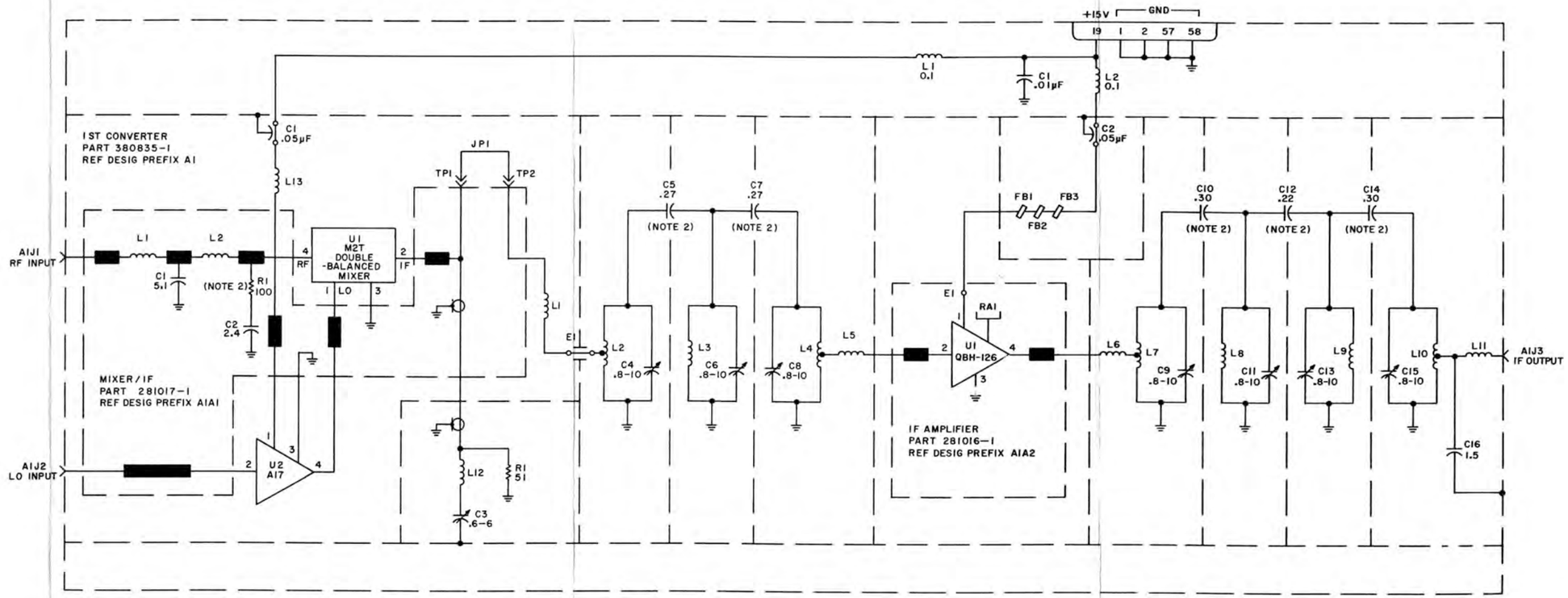

Figure 6-5. Type 796493-1, 1st Converter (A3A6), Schematic Diagram 480715 (A)

Courtesy of http://BlackRadios.terryo.org

NOTES:
1. UNLESS OTHERWIS SPECIFIED:
   a) RESISTANCE IS IN OHMS, ±5%, 1/8W.
   b) CAPACITANCE IS IN pF.
   c) INDUCTANCE IS IN µH.
2. NOMINAL VALUE, FINAL VALUE FACTORY SELECT.
3. DIFFERENCES IN TYPE NO.'S IS SHOWN IN TABLE A.
4. DIFFERENCES IN TYPE NO.'S IS SHOWN IN TABLE B.

TABLE A

TYPE NO.	U3	A1	A1A1
716003-1	A59	370396-1	270082-1
716003-2	QBH-103	370396-1	270082-1
716003-3	A59	370396-2	270082-2

TABLE B

PART NO.	C8 & C12	C9 & C11	C10	L6, L7, L8
270082-1	24	12	22	6740-15
270082-2	39	22	24	6740-13

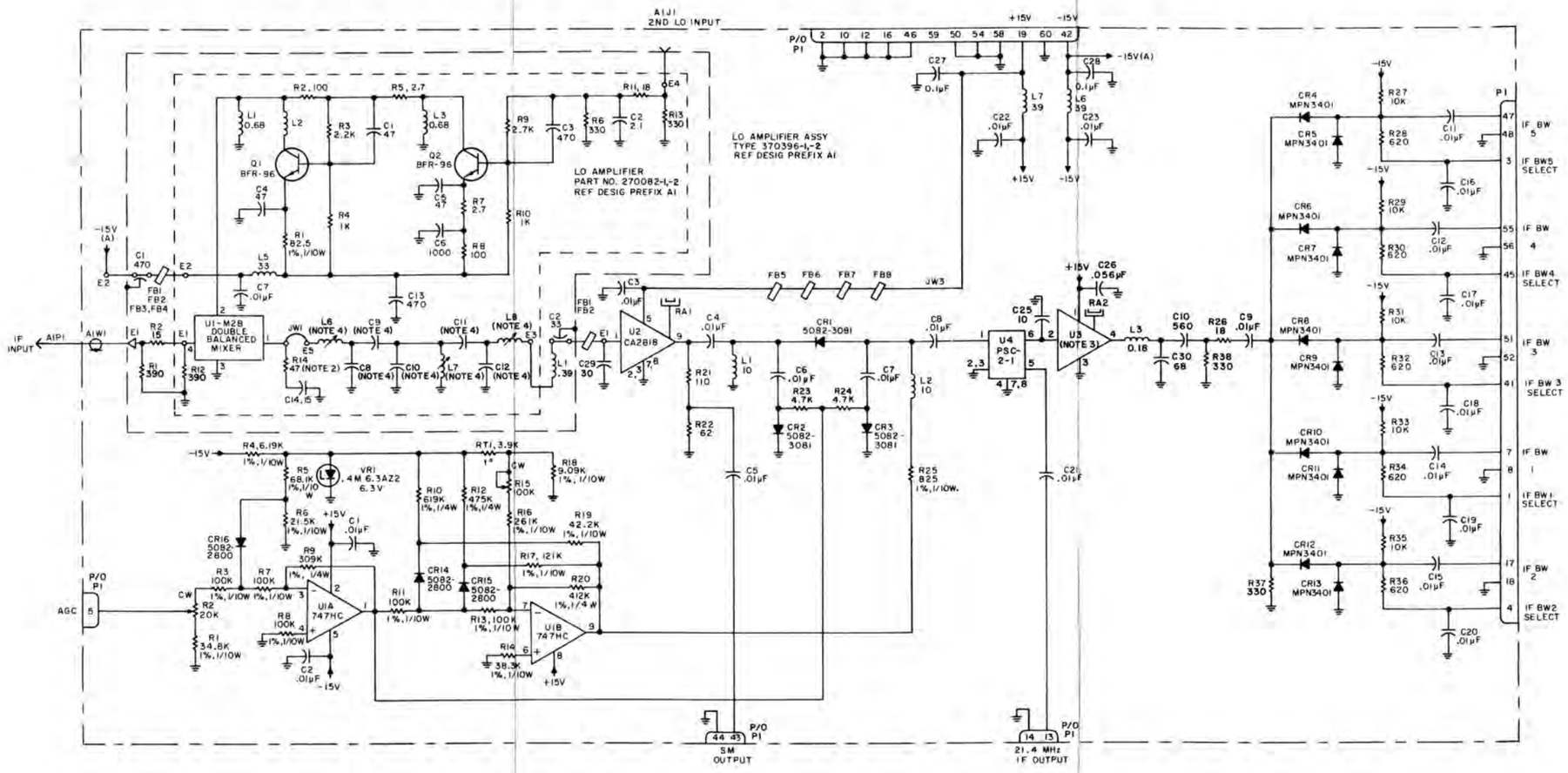

Figure 6-6. Type716003-3, 2nd Converter (A3A7), Schematic Diagram 580100 (G)

Courtesy of http://BlackRadios.terryo.org

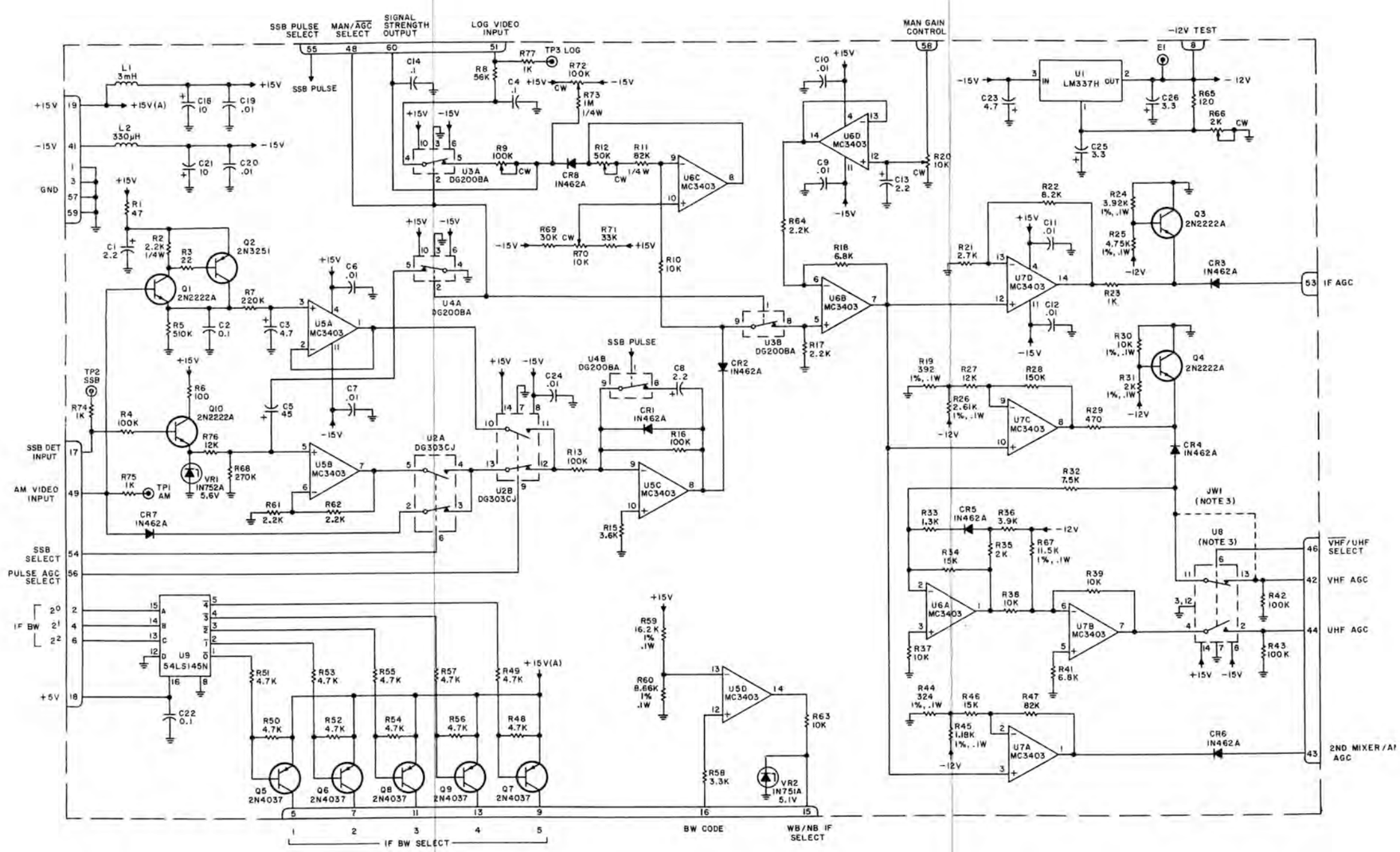

NOTES:
1. UNLESS OTHERWISE SPECIFIED:
   a) RESISTANCE IS IN OHMS, ±5%, 1/8W.
   b) CAPACITANCE IS IN μF.
2. U2, U3, U4, AND U8 ARE SHOWN IN LOGIC STATE "0".
3. DIFFERENCE BETWEEN TYPES IS SHOWN IN TABLE A.

TABLE A

TYPE NO.	JW1	U8
784002-1	NOT USED	DG301CJ
784002-2	USED	NOT USED

Figure 6-7. Type 784002-1, AGC Amplifier (A3A8), Schematic Diagram 590099 (F)

Courtesy of http://BlackRadios.terryo.org

NOTE:
1. ALL RESISTORS ARE TYPE RN55D.

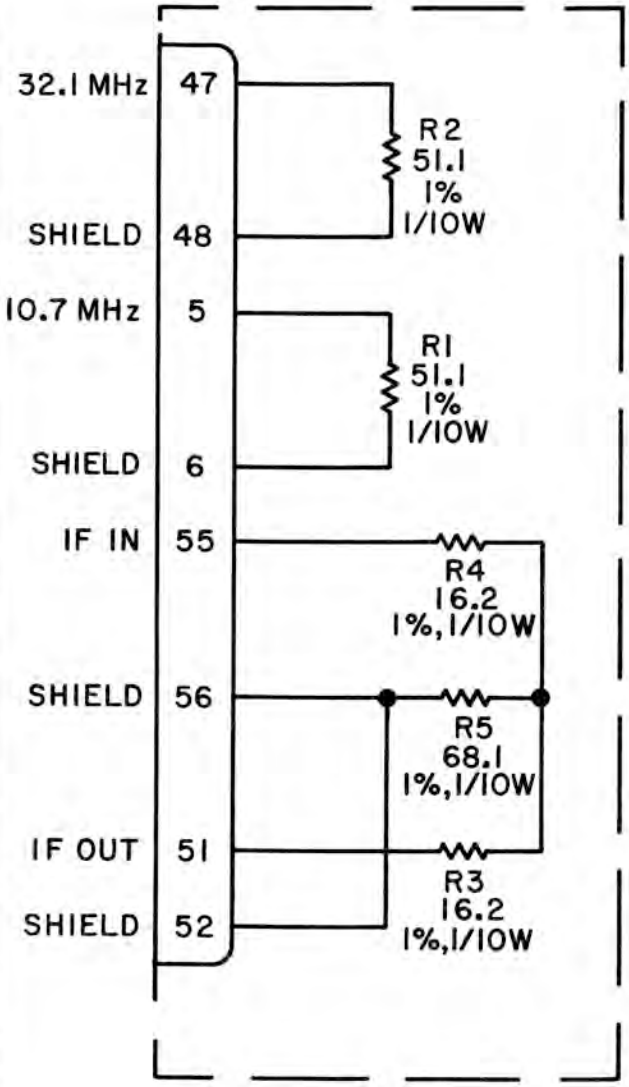

Figure 6-8. Type 798074-1, SSB Bypass (A3A14), Schematic Diagram 290508 (A)

Courtesy of http://BlackRadios.terryo.org

NOTES:
1. UNLESS OTHERWISE SPECIFIED:
   a) RESISTANCE IS IN OHMS, ±5%, 1/4W.
   b) CAPACITANCE IS IN µF.
2. U1-U3 AND U7 ARE SHOWN IN LOGIC STATE "Ø".
3. DIFFERENCE BETWEEN TYPES IS SHOWN IN TABLE A.
4. TYPE 796233-2 USED WHEN DIGITAL/AUDIO/VIDEO OPTION IS INSTALLED IN RECEIVER.

TABLE A

TYPE NO.	U8	U9	R37	R39	R50	R14	R23	R7
796233-1	NOT USED	NOT USED	390	220	91	91	2.2M	91
796233-2	VTL5C4	VTL5C4	NOT USED	NOT USED	NOT USED	91	2.2M	91
796233-3	VTL5C4	VTL5C4	NOT USED	NOT USED	NOT USED	51	2.2M	51
796233-4	NOT USED	NOT USED	390	220	91	91	10K	91
796233-5	NOT USED	NOT USED	390	220	91	51	2.2M	51

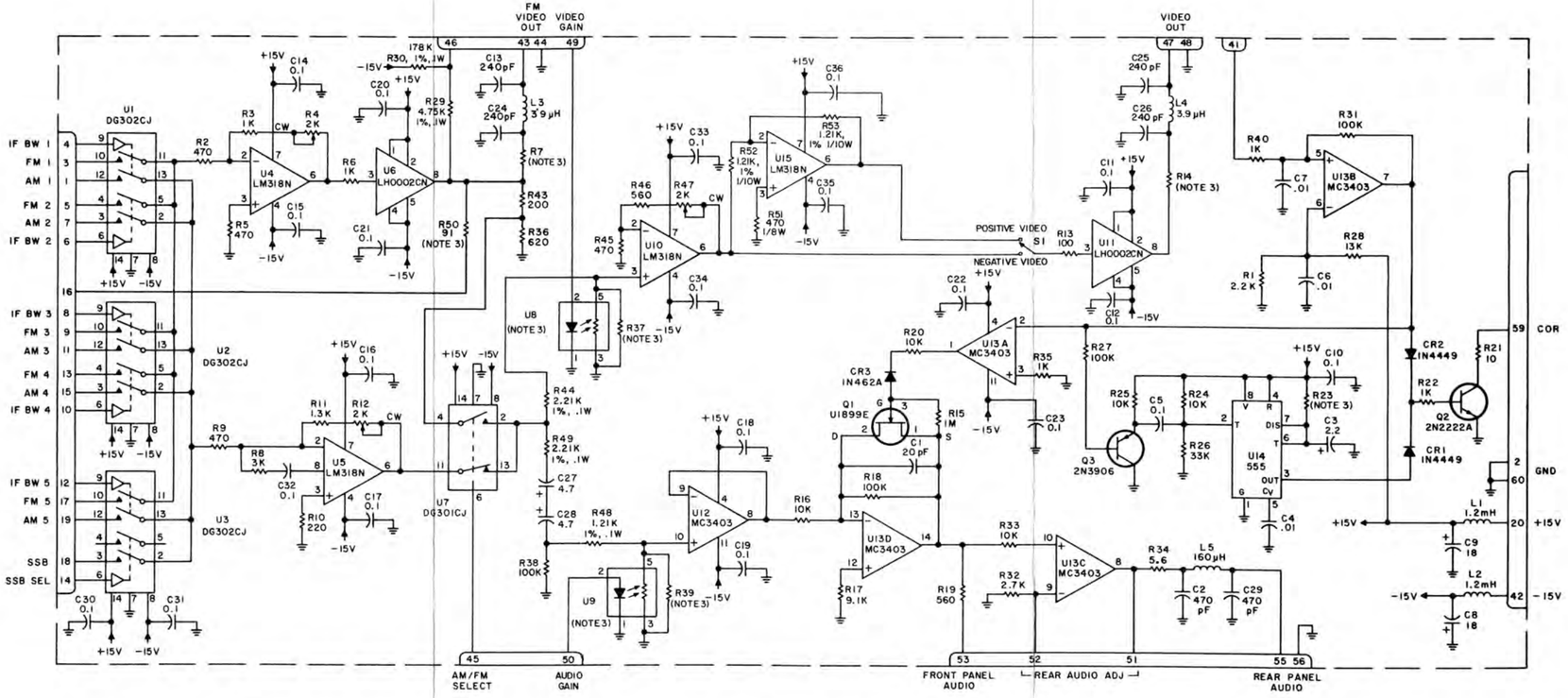

Figure 6-9. Type 796233-1, Audio/Video/Cor (A3A15), Schematic Diagram 480343 (H)

Courtesy of http://BlackRadios.terryo.org

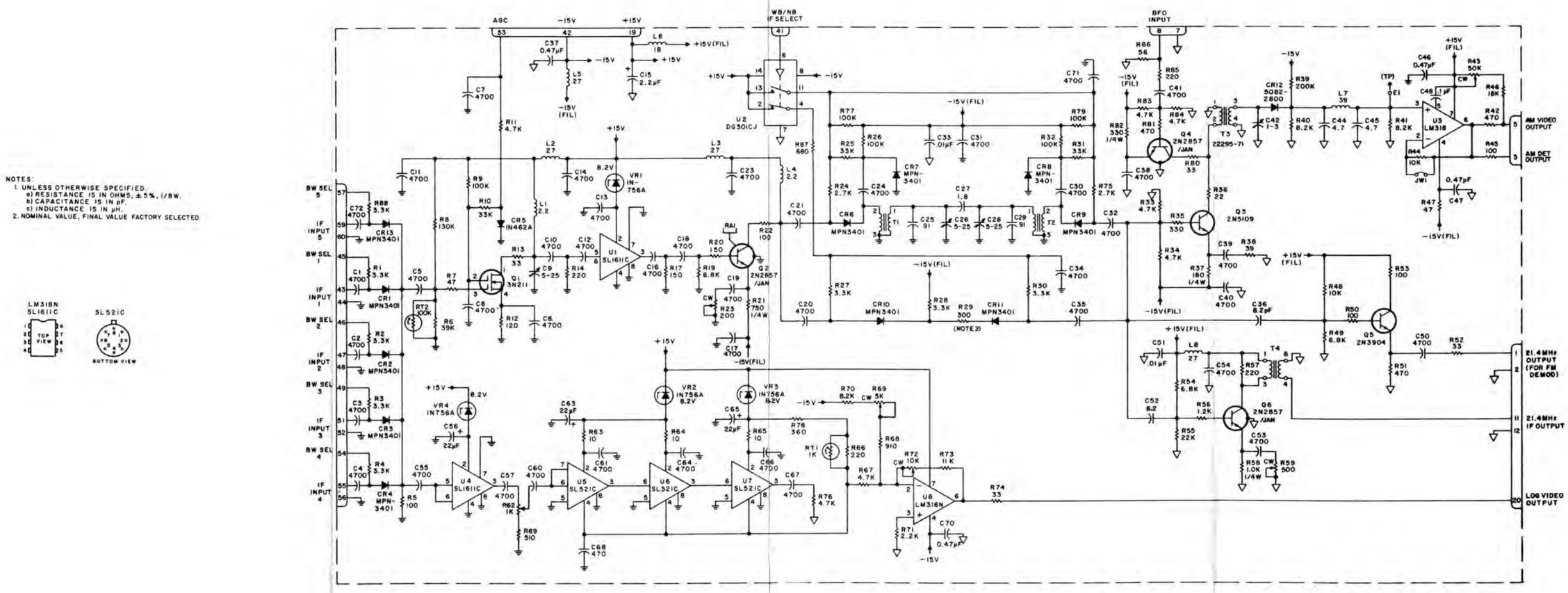

Figure 6-10. Type 724016-1, AM Demodulator/IF Output Amplifier (A3A16), Schematic Diagram 570157 (L)

Courtesy of http://BlackRadios.terryo.org

NOTES:
1. UNLESS OTHERWISE SPECIFIED:
   a) CAPACITANCE IS IN µF.
2. (S) INDICATES PIN IS USED FOR COAX SHIELD.
3. * INDICATES WIRE WRAP CONNECTION.

MODULE	GND CONNECTIONS
A1	1,2,6,8,10 THRU 15,39 43,45,47,50,52,54,56 59,60
A2	1,2,49,50,51,52
A5	1,2,8,46,54,60

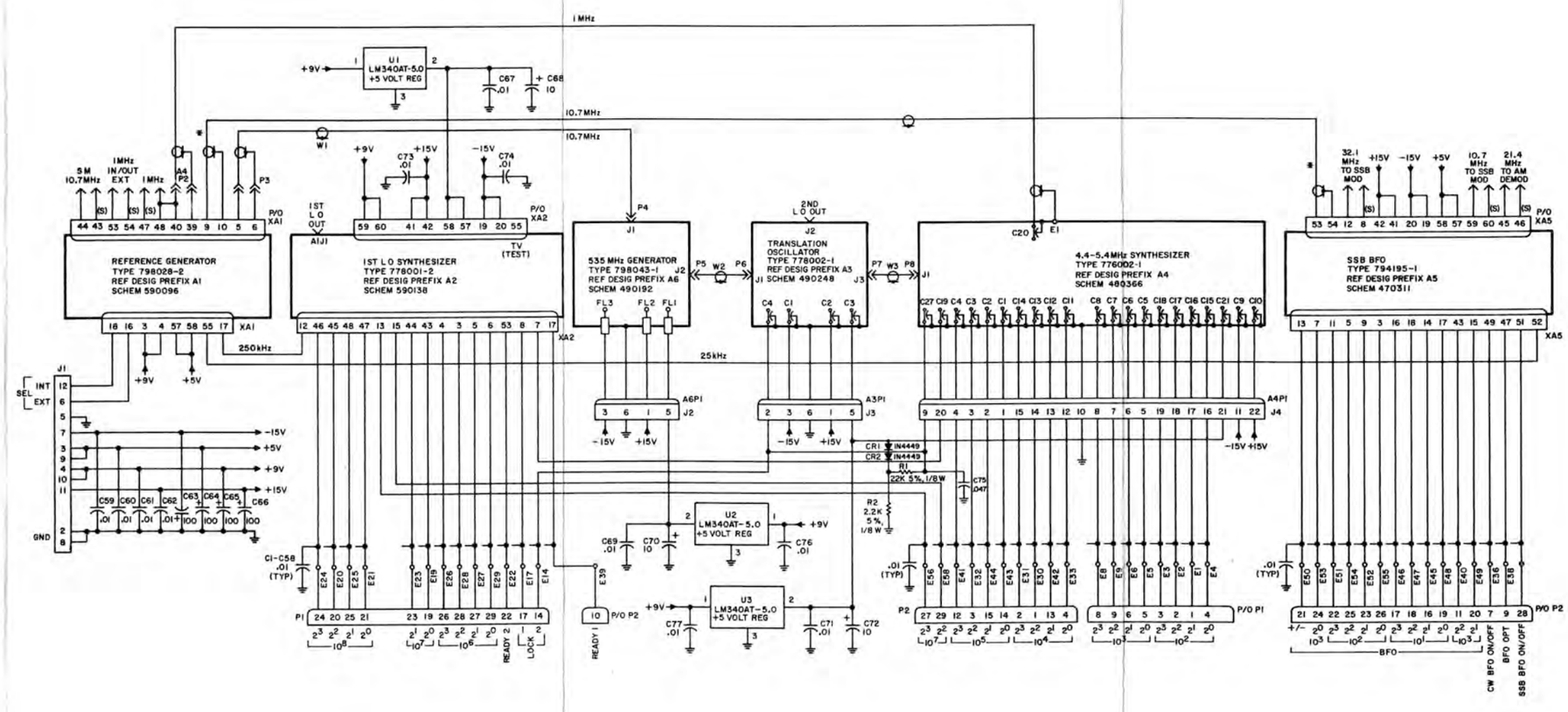

Figure 6-11. Type 798071-1, Synthesizer Motherboard (A4), Schematic Diagram 590143 (E)

Courtesy of http://BlackRadios.terryo.org

NOTES:
1. UNLESS OTHERWISE SPECIFIED:
   a) RESISTANCE IS IN OHMS, ±5%, 1/8W.
   b) CAPACITANCE IS IN µF.
2. CW ON R32 DENOTES FULL CLOCKWISE POSITION OF ACTUATOR.
3. THE DIFFERENCE BETWEEN TYPES IS SHOWN IN TABLE I.

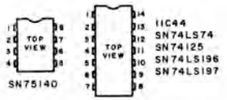

TABLE I

DASH NO.	DIFFERENCE
798028-1	NO CONNECTION FROM U10 PIN 2 TO PINS 19 & 20 OF CONNECTOR
798028-2	AS SHOWN

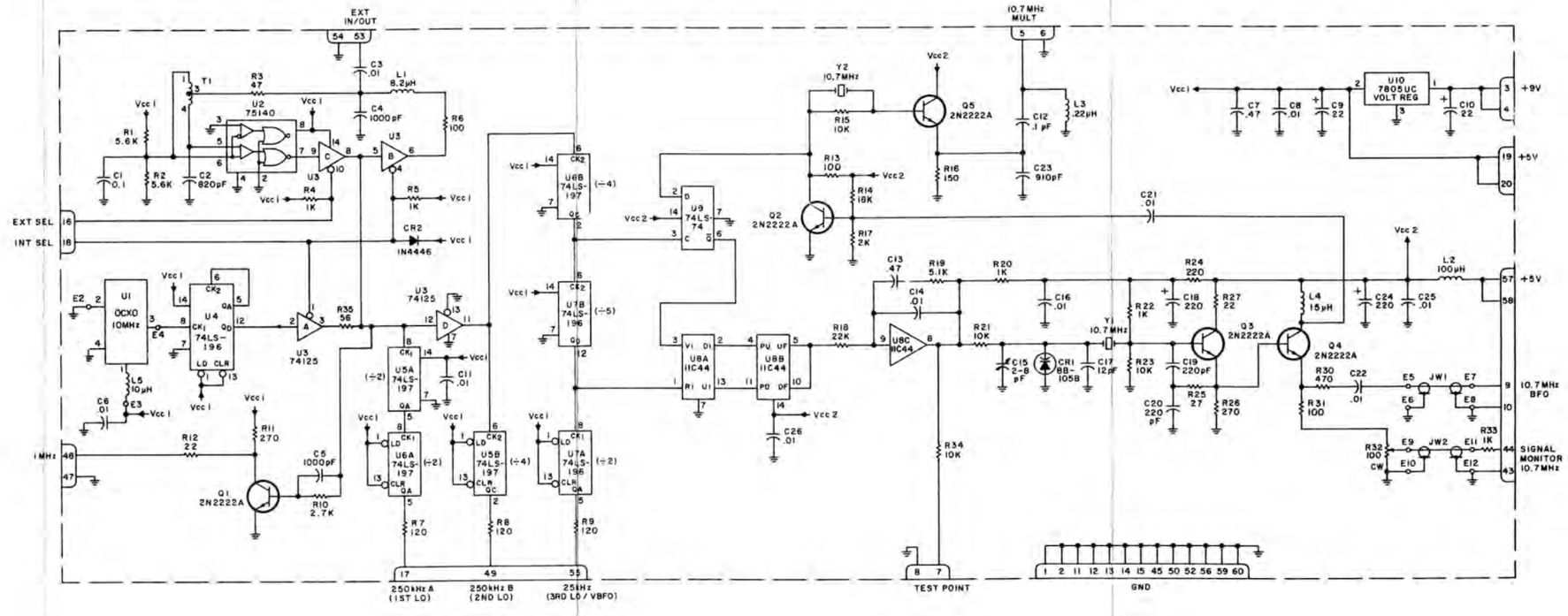

Figure 6-12. Type 798028-2, Reference Generator (A4A1), Schematic Diagram 590096 (F)

Courtesy of http://BlackRadios.terryo.org

NOTES:
1. UNLESS OTHERWISE SPECIFIED:
   a) RESISTANCE IS IN OHMS, ±5%, 1/4W.
   b) CAPACITANCE IS IN µF.
2. * INDICATES-RESISTANCE IS IN OHMS, ±5%, 1/8W, METAL FILM.
3. DIFFERENCE BETWEEN TYPES IS SHOWN IN TABLE A.

TABLE A

TYPE	CR6	CR7	CR12	CR13	L3,L4	R47,R48	C22
778001-1	IN4449	IN4449	IN4449	IN4449	2.2MH	N/U	15
778001-2	N/U	N/U	N/U	N/U	2.2MH	N/U	15
778001-3	N/U	N/U	N/U	N/U	N/U	56	N/U

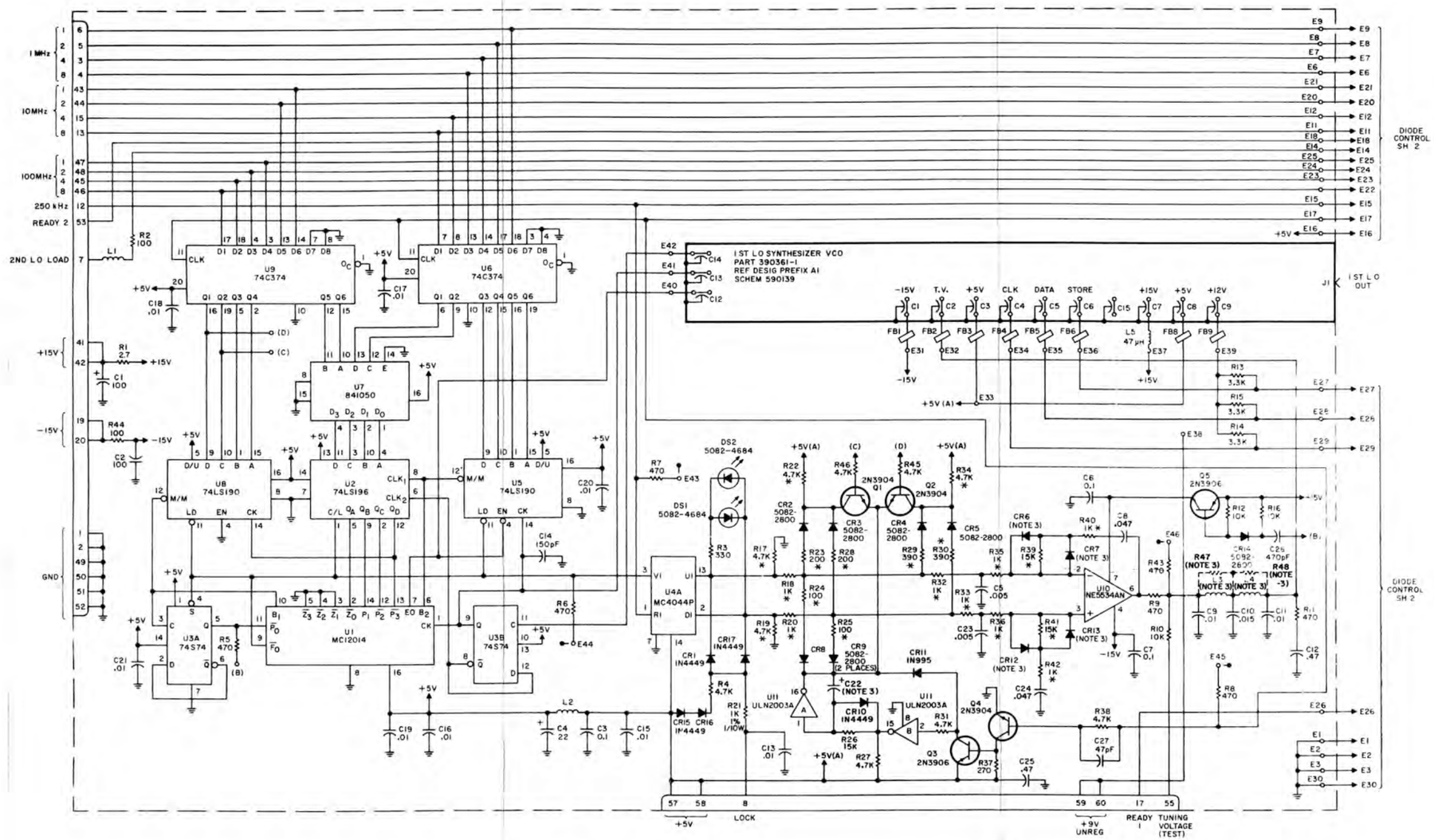

Figure 6-13. Type 778001-2, 1st LO Synthesizer (A4A2), Schematic Diagram 590138 (D) (Sheet 1 of 2)

Courtesy of http://BlackRadios.terryo.org

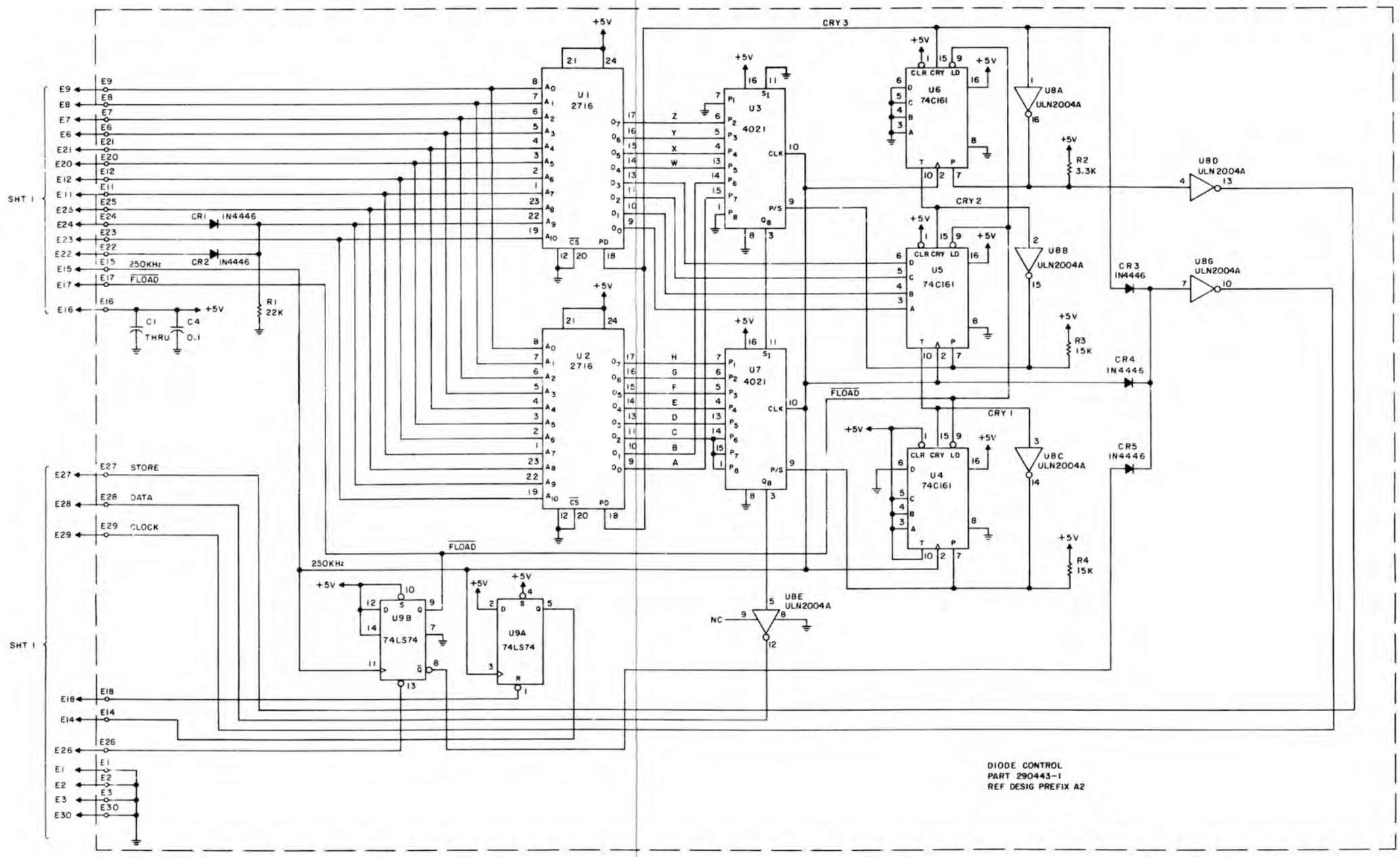

Figure 6-13. Type 778001-2, 1st LO Synthesizer (A4A2), Schematic Diagram 590138 (D) (Sheet 2 of 2)

Courtesy of http://BlackRadios.terryo.org

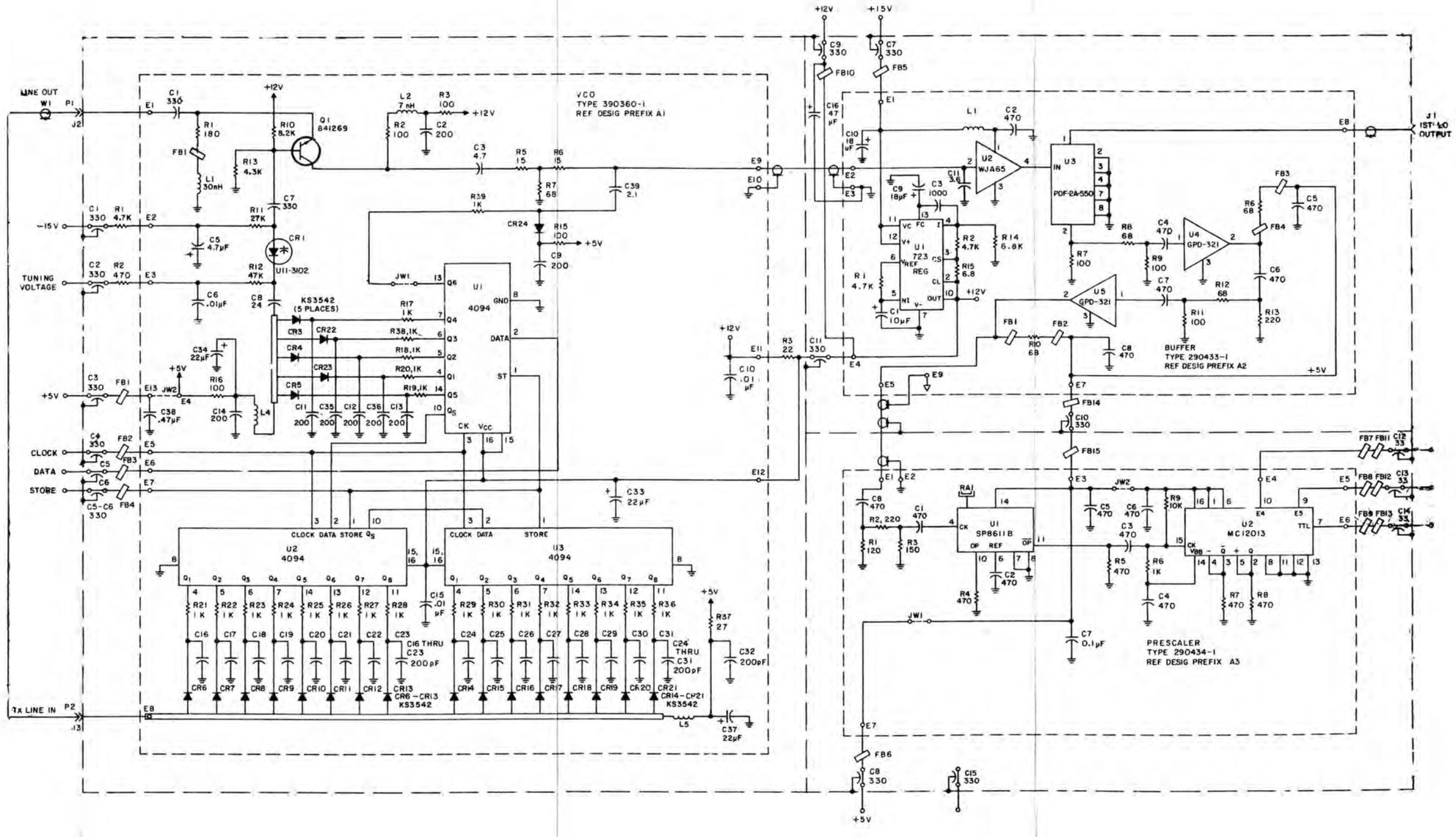

Figure 6-14. Part 390361-1, 1st LO Synthesizer (A4A2A1), Schematic Diagram 590139 (S)

Courtesy of http://BlackRadios.terryo.org

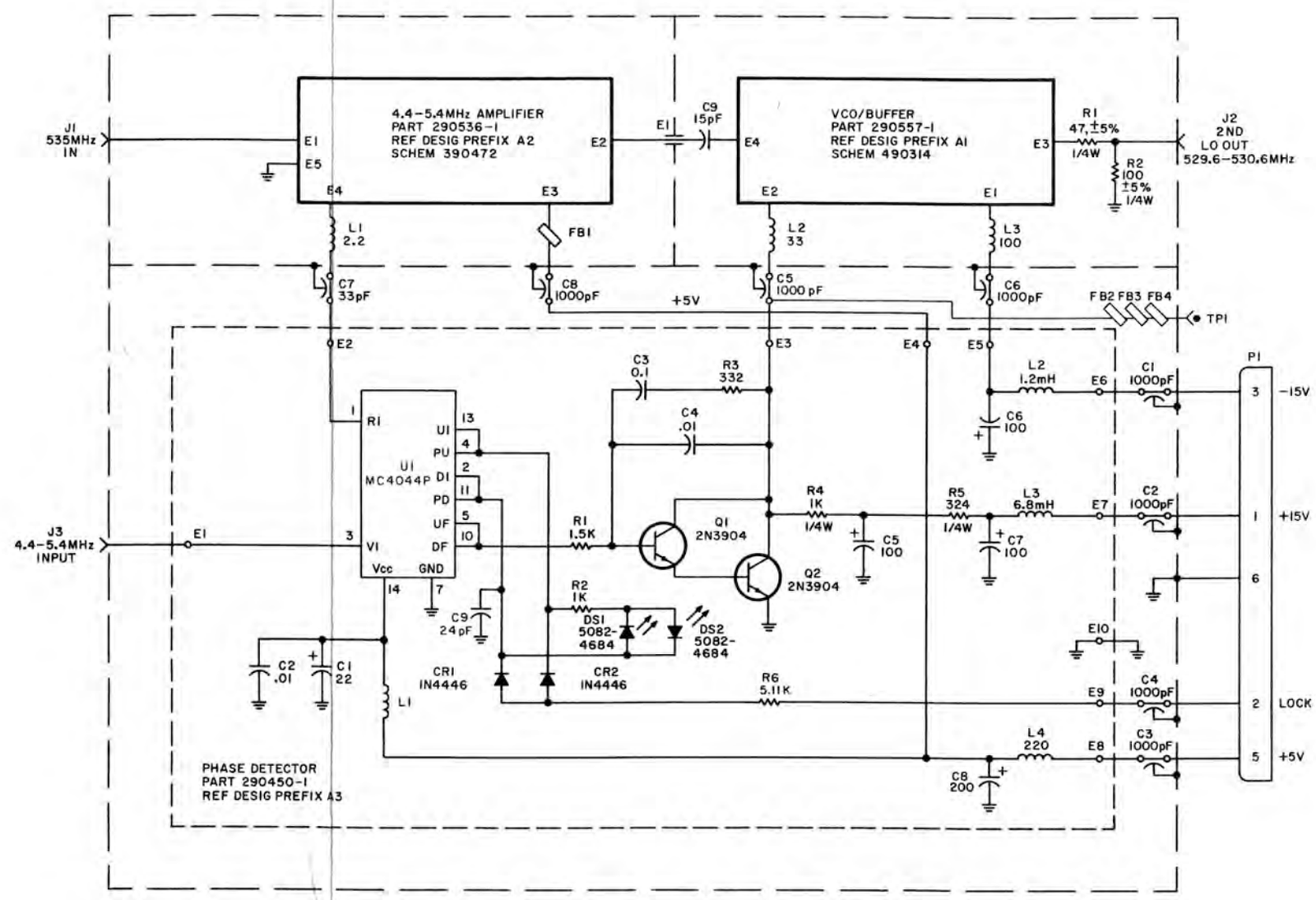

NOTES:
1. UNLESS OTHERWISE SPECIFIED:
   a) RESISTANCE IS IN OHMS, ±1%, 1/10W.
   b) CAPACITANCE IS IN μF.
   c) INDUCTANCE IS IN μH.

Figure 6-15. Type 778002-1, Translation Oscillator (A4A3), Schematic Diagram 490248 (D)

Courtesy of http://BlackRadios.terryo.org

NOTES:
1. UNLESS OTHERWISE SPECIFIED:
   a) RESISTANCE IS IN OHMS, ±5%, 1/8W.
   b) CAPACITANCE IS IN pF.
   c) INDUCTANCE IS IN μH.
2. DIFFERENCE BETWEEN TYPES IS SHOWN IN TABLE I.

TABLE I

PART NO.	C2
290557-1	470
290557-2	N/U

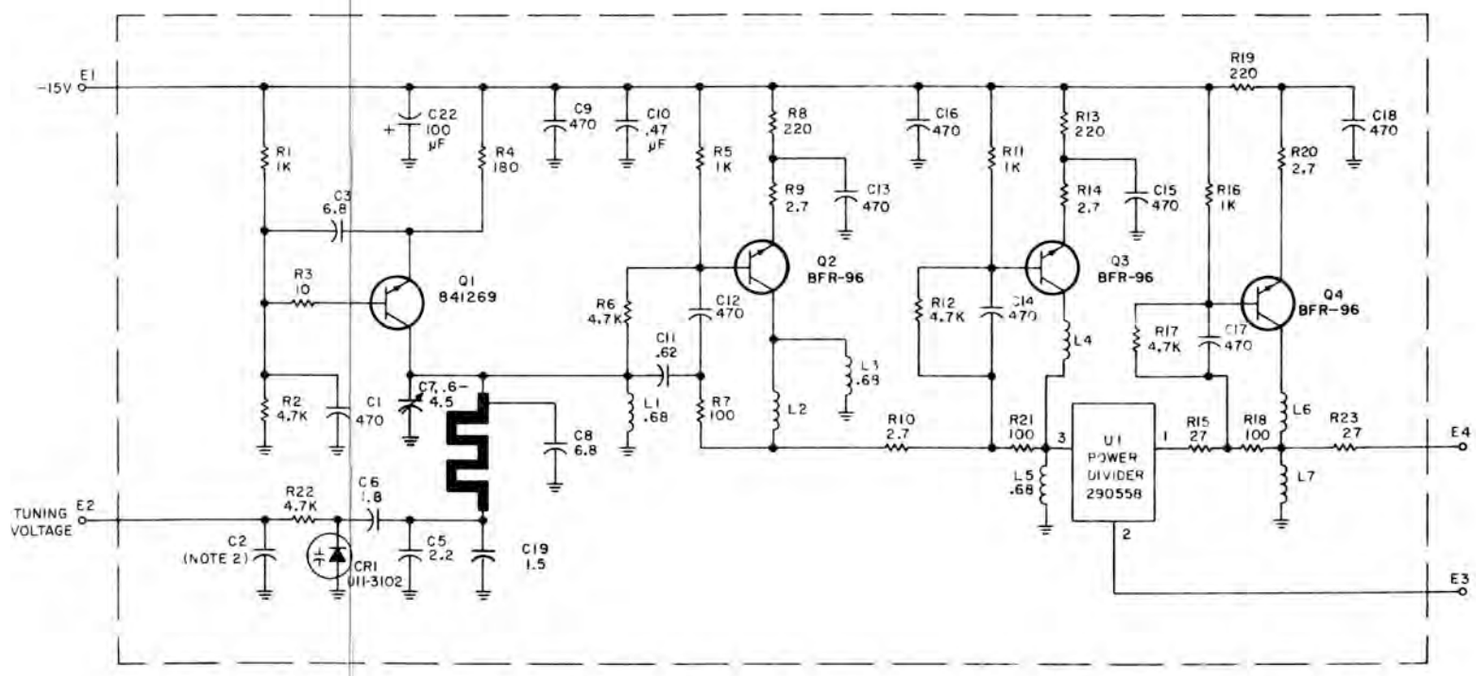

Figure 6-16. Part 290557-1, VCO Buffer (A4A3A1), Schematic Diagram 490314 (J)

Courtesy of http://BlackRadios.terryo.org

NOTES:
1. UNLESS OTHERWISE SPECIFIED:
   a) RESISTANCE IS IN OHMS, ±5%, 1/8W.
   b) CAPACITANCE IS IN pF.

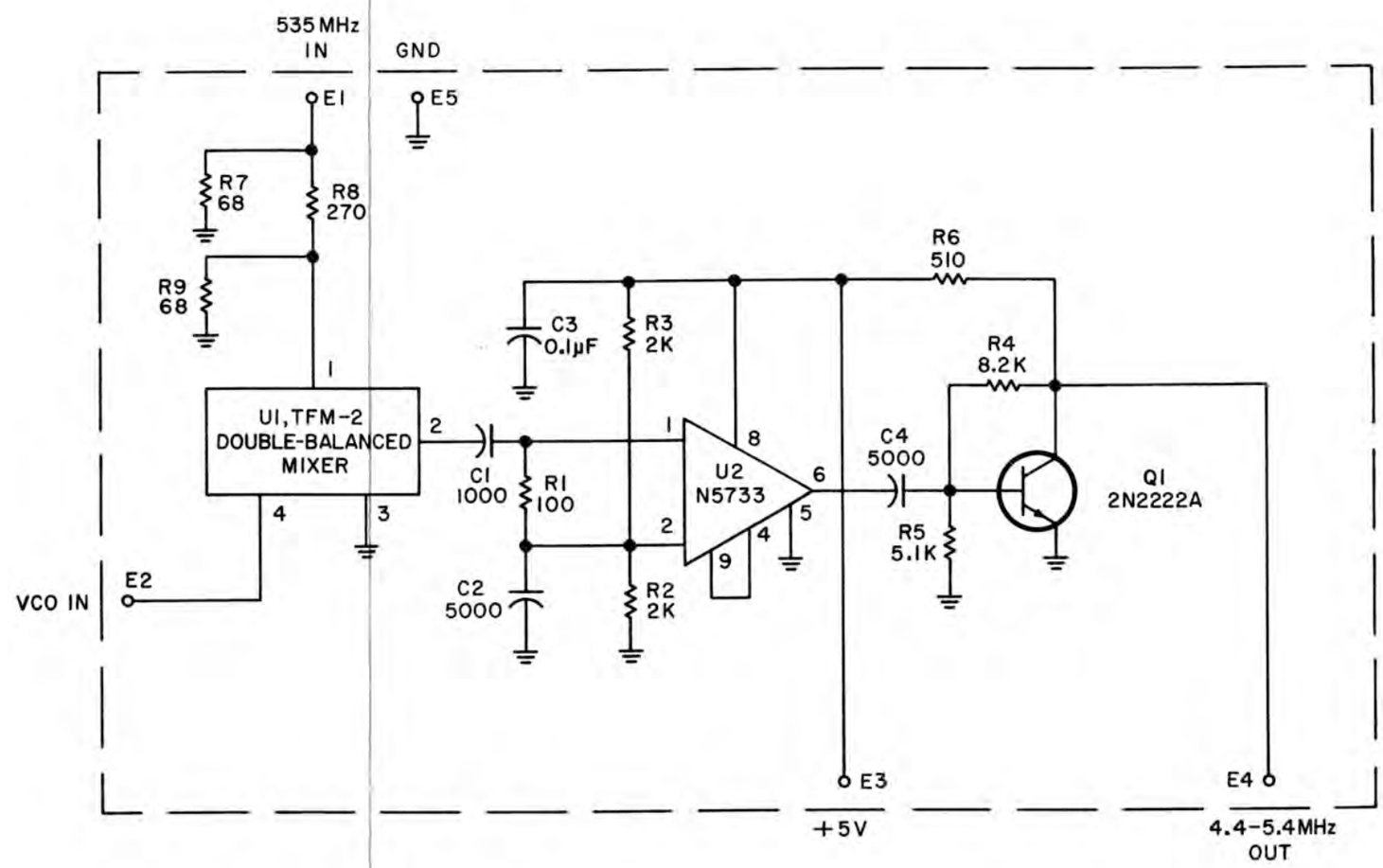

Figure 6-17. Part 290536-1, 4.4-5.4 MHz Amplifier (A4A3A2), Schematic Diagram 390472 (B)

Courtesy of http://BlackRadios.terryo.org

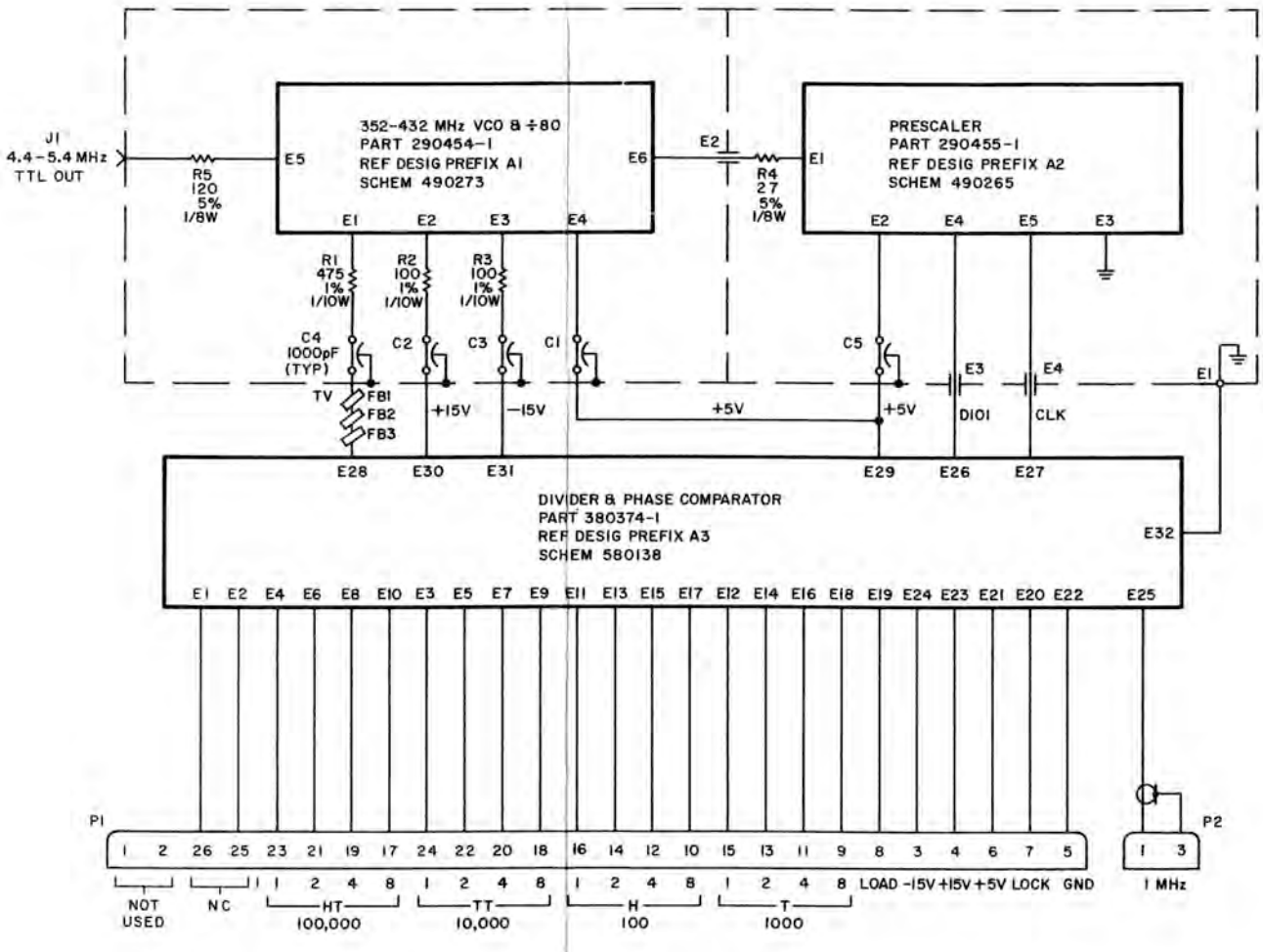

Figure 6-18. Type 776002-1, 4.4-5.4 MHz Synthesizer (A4A4), Schematic Diagram 480366 (C)

Courtesy of http://BlackRadios.terryo.org

NOTES:
1. UNLESS OTHERWISE SPECIFIED:
   a) RESISTANCE IS IN OHMS, ±5%, 1/8W.
   b) CAPACITANCE IS IN μF.
   c) INDUCTANCE IS IN μH.
2. NOMINAL VALUE. FINAL VALUE FACTORY SELECTED.

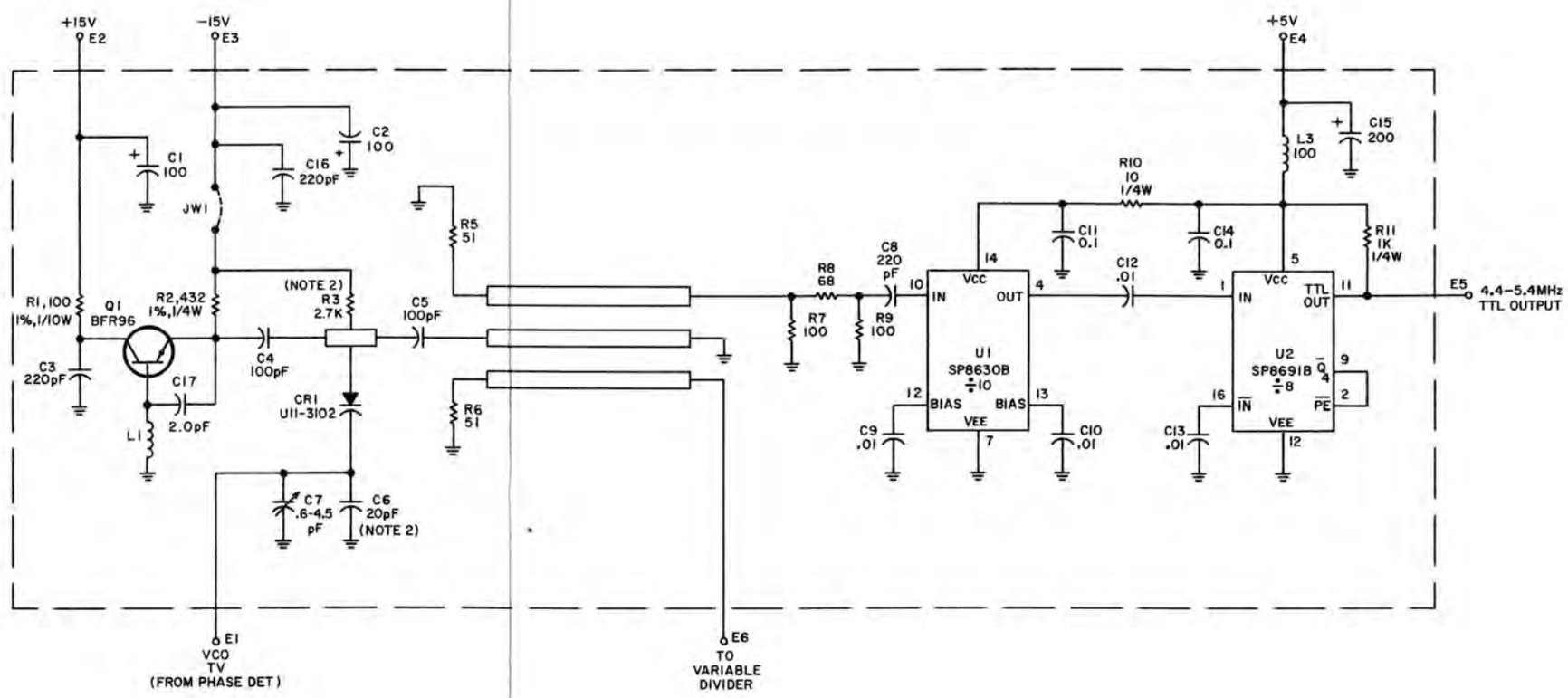

Figure 6-19. Part 290454-1, 352-432 MHz VCO and Divide-by-80 (A4A4A1), Schematic Diagram 490273 (E)

Courtesy of http://BlackRadios.terryo.org

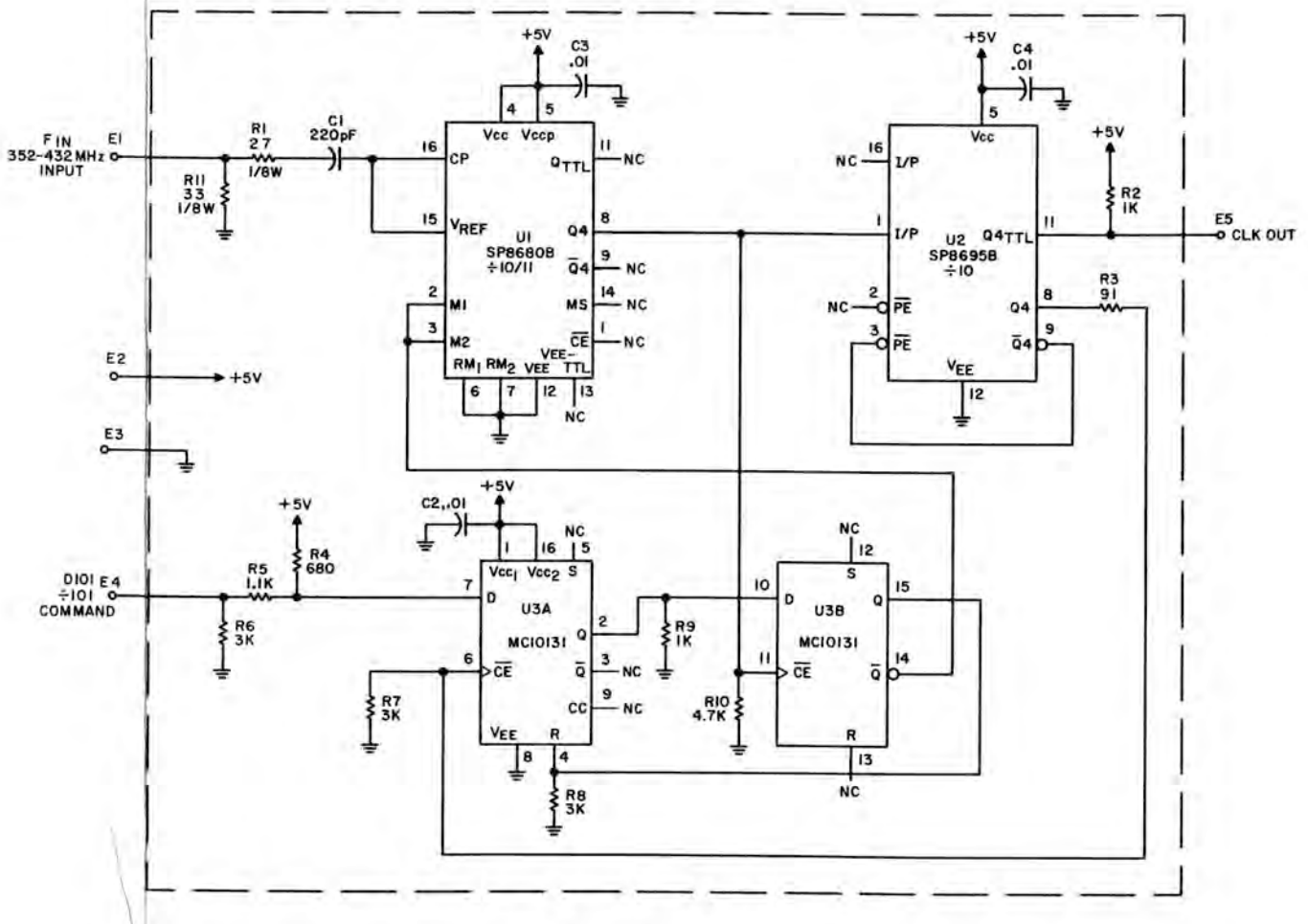

NOTES:
1. UNLESS OTHERWISE SPECIFIED:
   a) RESISTANCE IS IN OHMS, ±5%, 1/4W.
   b) CAPACITANCE IS IN μF.

Figure 6-20. Part 290455-1, Prescaler Assembly (A4A4A2), Schematic Diagram 490265 (B)

Courtesy of http://BlackRadios.terryo.org

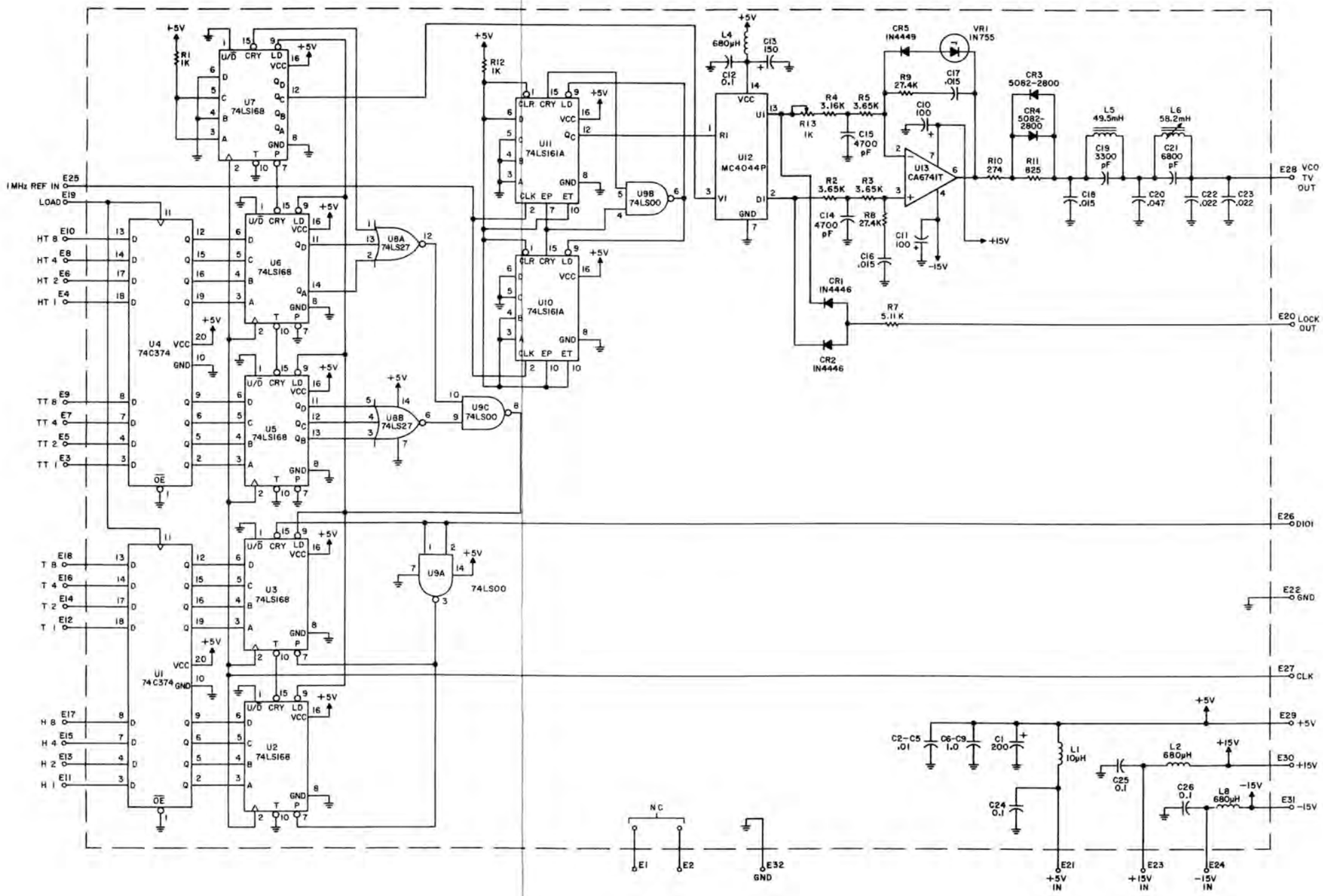

NOTES
1. UNLESS OTHERWISE SPECIFIED:
a) RESISTANCE IS IN OHMS, ±1%, 1/10W.
b) CAPACITANCE IS IN μF.

Figure 6-21. Part 380374-1, Divider and Phase Comparator (A4A4A3), Schematic Diagram 580138(D)

Courtesy of http://BlackRadios.terryo.org

NOTE:
UNLESS OTHERWISE SPECIFIED:
a) RESISTANCE IS IN OHMS, ±5%, 1/4W.
b) CAPACITANCE IS IN pF.

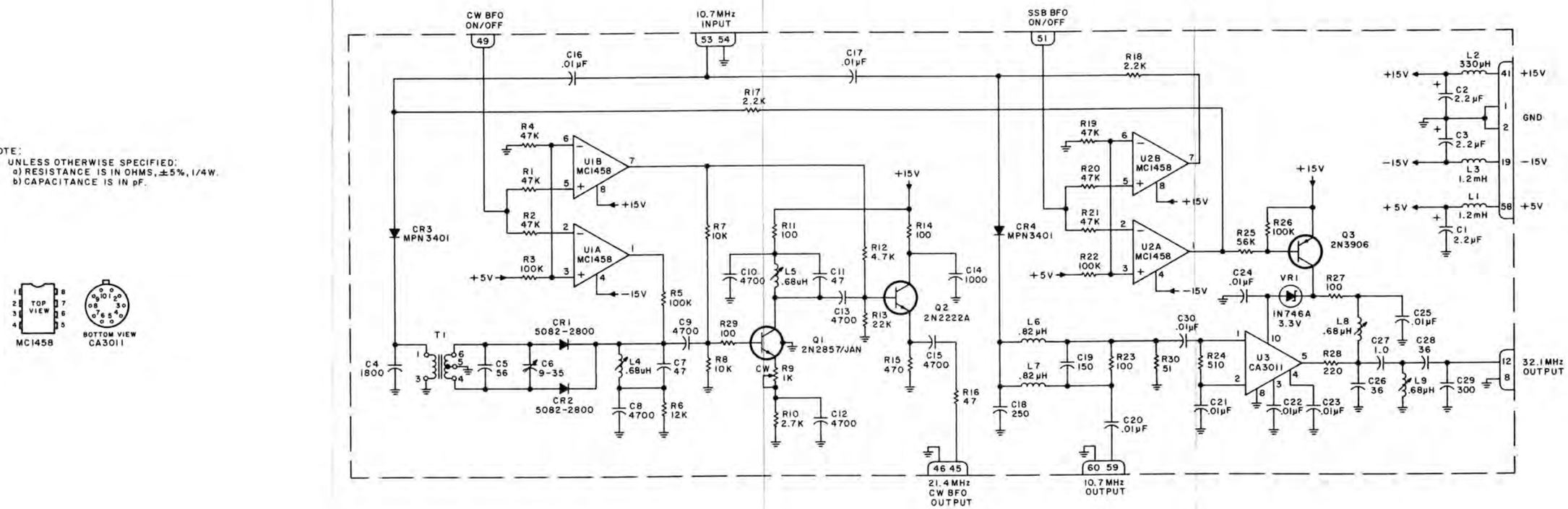

Figure 6-22. Type 794195-1, SSB BFO (A4A5), Schematic Diagram 470311 (B)

Courtesy of http://BlackRadios.terryo.org

NOTES

1. UNLESS OTHERWISE SPECIFIED
   a) RESISTANCE IN OHMS ± 1%, 1/10W.
   b) CAPACITANCE IN µF
2. PIN ARRANGEMENT FOR U1 & U2 SHOWN IN DETAIL 'A'. PIN ARRANGEMENT FOR U3 SHOWN IN DETAIL 'C'. PIN ARRANGEMENT FOR U4 & U5 SHOWN IN DETAIL 'B'.

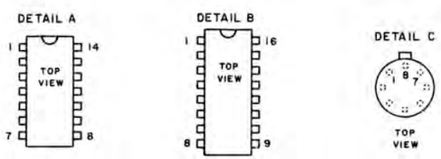

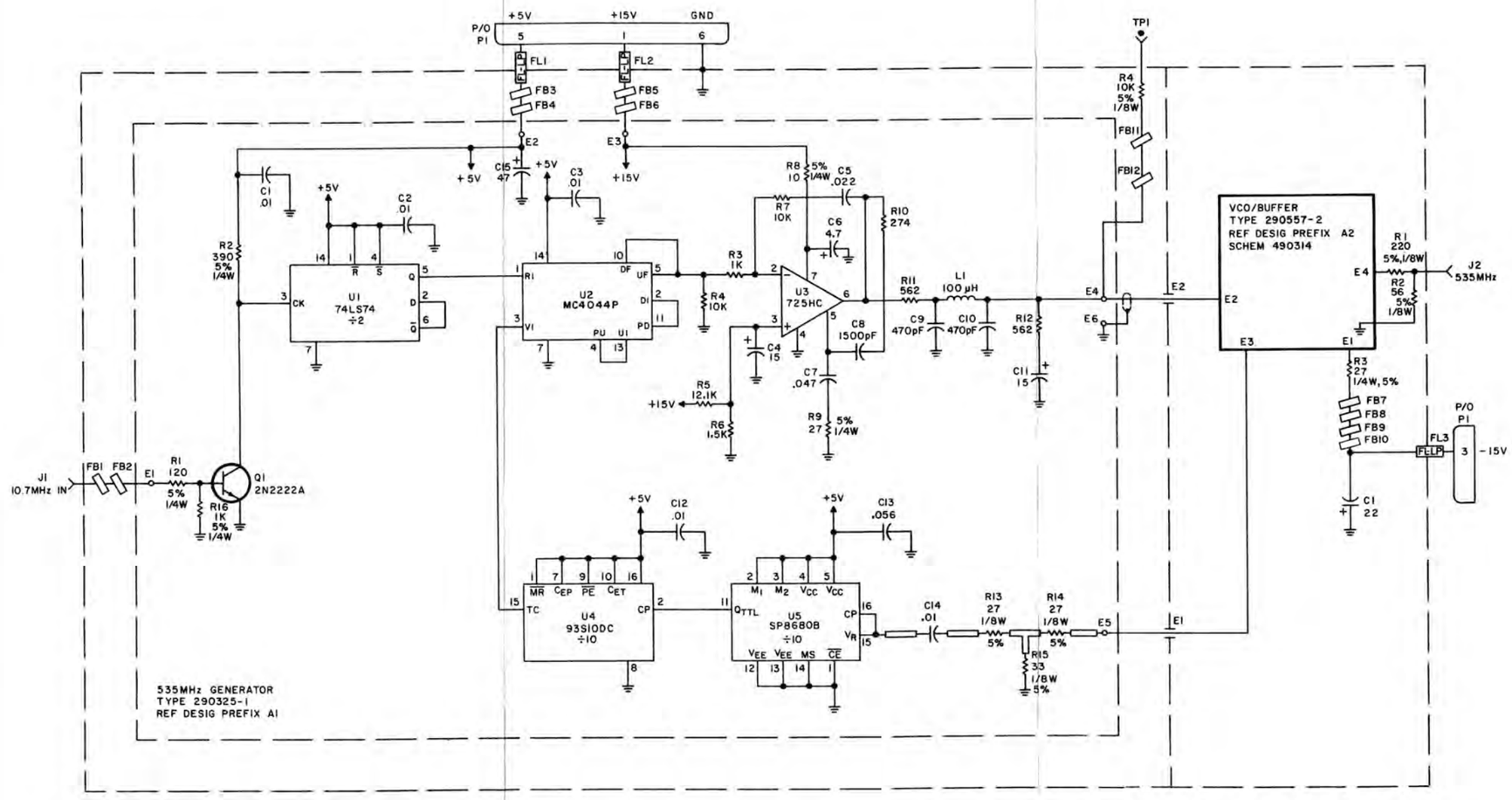

Figure 6-23. Type 798043-1, 535 MHz Generator (A4A6), Schematic Diagram 490192 (F)

Courtesy of http://BlackRadios.terryo.org

NOTES:
1. UNLESS OTHERWISE SPECIFIED:
   a) RESISTANCE IS IN OHMS, ±5%, 1/8W.
   b) CAPACITANCE IS IN pF.
   c) INDUCTANCE IS IN μH.
2. DIFFERENCE BETWEEN TYPES IS SHOWN IN TABLE I.

TABLE I

PART NO.	C2
290557-1	470
290557-2	N/U

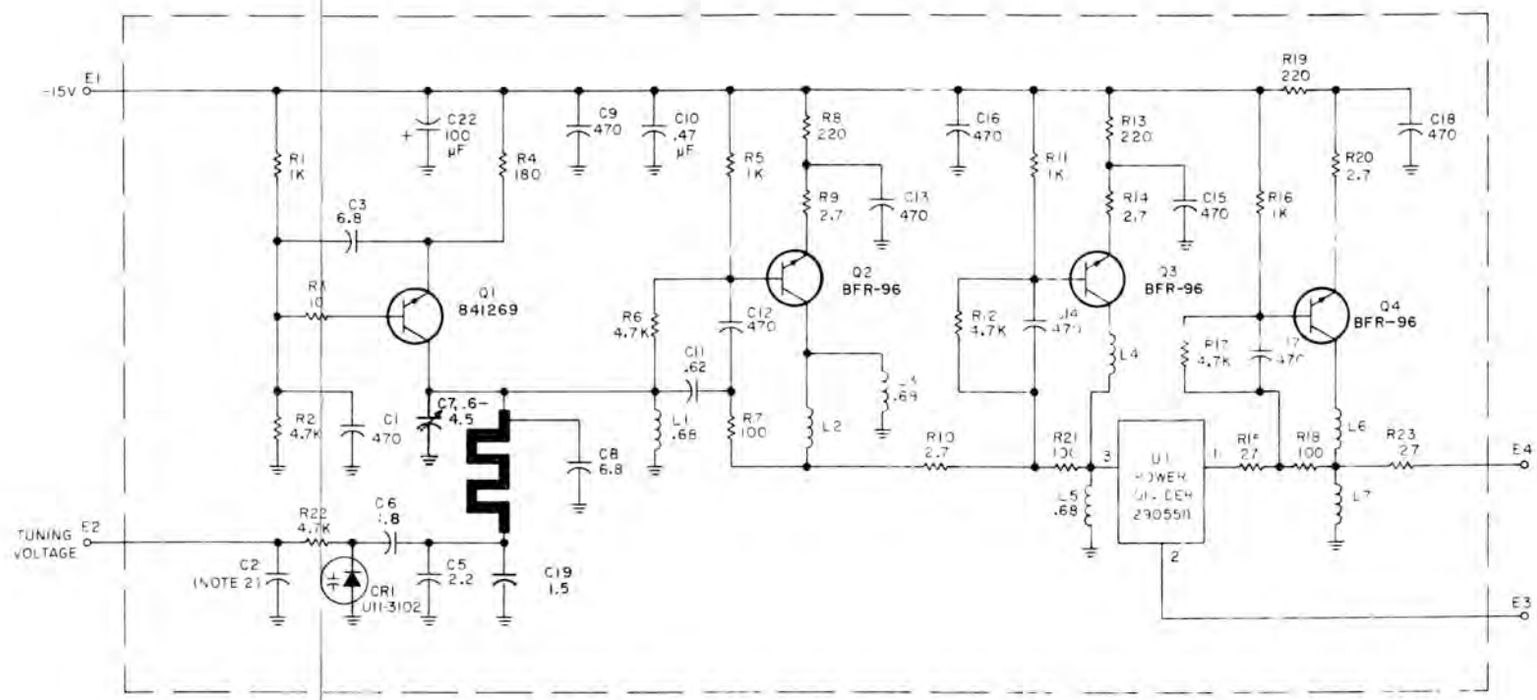

Figure 6-24. Part 290557-2, VCO Buffer (A4A6A2), Schematic Diagram 490314 (J)

Courtesy of http://BlackRadios.terryo.org

NOTES:

1. UNLESS OTHERWISE SPECIFIED, CAPACITANCE IS IN µF.
2. CONNECTIONS MARKED WITH ASTERISK (*) ARE WIRE WRAPPED. ALL OTHER CONNECTIONS ARE PRINTED CIRCUIT. REFERENCE: SEE TABLE A FOR TABULATED LISTING OF WIRE WRAPPED CONNECTIONS. (SHEET 2)
3. NEGATIVE Z AXIS OUTPUT IS STANDARD. FOR OPTIONAL POSITIVE Z AXIS OUTPUT, MOVE W/W CONNECTION FROM PIN 21 TO PIN 22 OF OPTION SLOT 2.
4. REFER TO MAIN CHASSIS PARTS LIST FOR TYPE NUMBER.

MODULE	GND CONNECTION ⏚
A1-A3	A1, A2, A45, A46
A1-A3	B1, B2, B45, B46

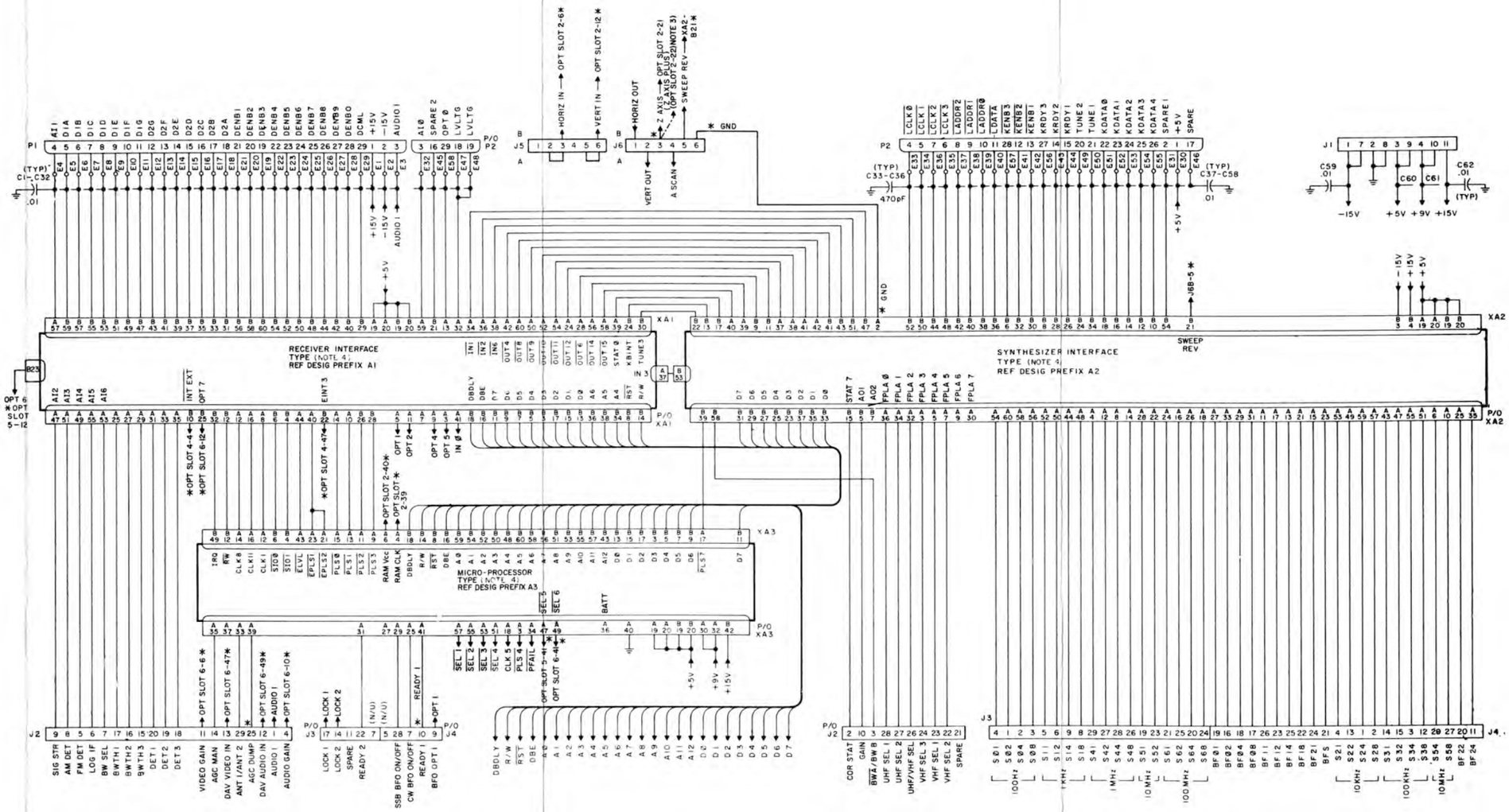

Figure 6-25. Type 798039-7. Digital I/O Motherboard (A5), Schematic Diagram 580378 (Sheet 1 of 2) (D)

Courtesy of http://BlackRadios.terryo.org

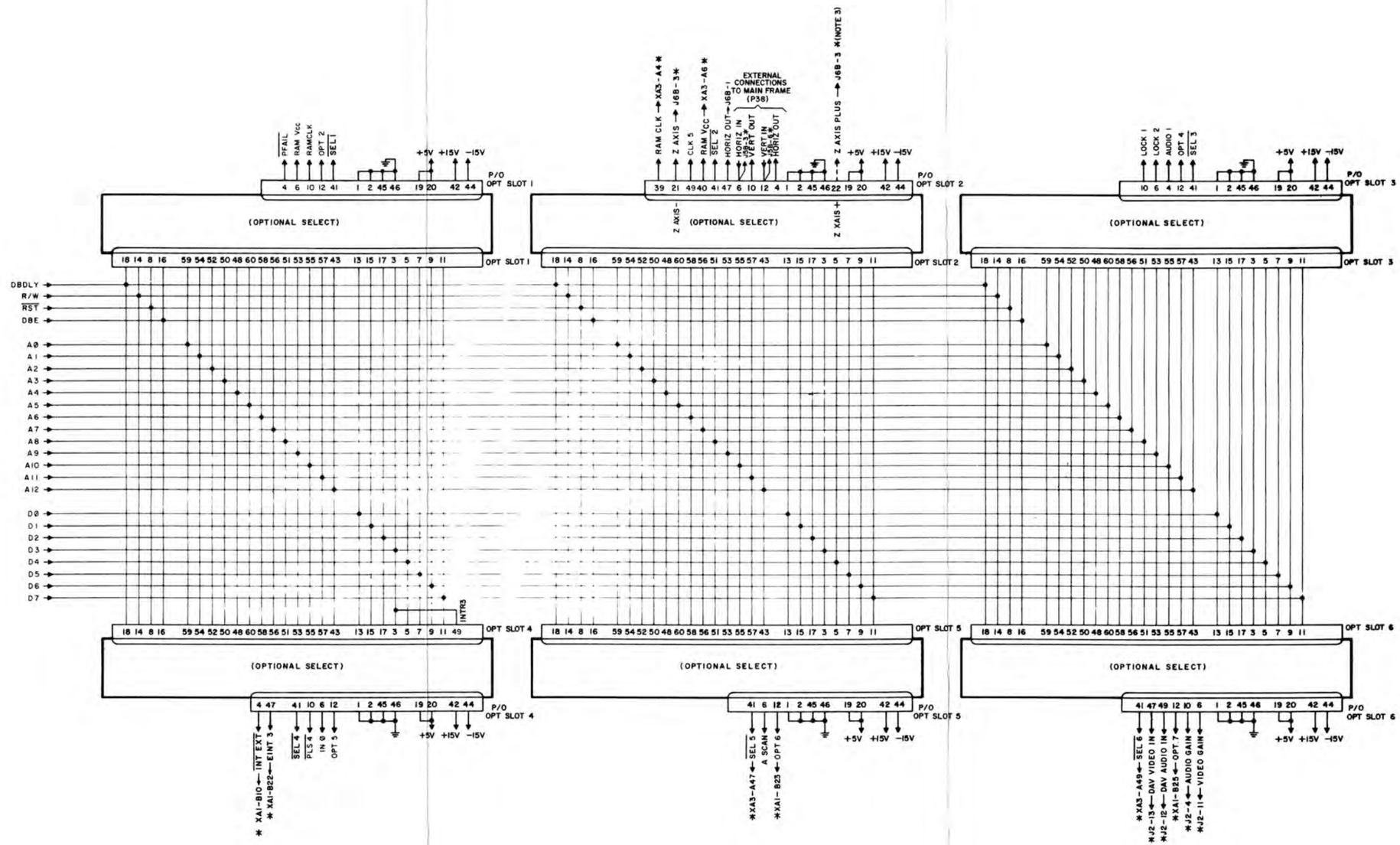

TABLE A

SIGNAL NAME	CONN-PIN NO.	CONN-PIN NO.	CONN-PIN NO.
SWP REV	J6B-5	XA2-B21	
GND	J6B-6	XA2-A2	
AGC DUMP	J2-25	XA3-A39	
READY 1	J4-10	XA3-A41	
SEL 5	XA3-A47	OPT SLOT 5-41	
SEL 6	XA3-A49	6-41	
OPT 7	XA1-B25	6-12	
INT EXT	XA1-B10	4-4	
EINT 3	XA1-B22	4-47	
Z AXIS +	J6B-3	2-22	OPTIONAL (NOTE)
Z AXIS -	J6B-3	2-21	STD
RAM Vcc	XA3 — A6	2-40	
RAM CLK	XA3 — A4	OPT SLOT 2-39	
DAV AUDIO IN	J2 — 12	OPT SLOT 6-49	
DAV VIDEO IN	J2 — 13	OPT SLOT 6-47	
AUDIO GAIN	J2 — 4	OPT SLOT 6-10	
VIDEO GAIN	J2 — 11	OPT SLOT 6-8	
HORIZ IN	J5B-3	OPT SLOT 2-6	
VERT IN	J5B-6	OPT SLOT 2-12	
OPT 6	XA1-B23	OPT SLOT 5-12	

Figure 6-25. Type 798039-7, Digital I/O Motherboard (A5), Schematic Diagram 580378 (Sheet 2 of 2) (D)

Courtesy of http://BlackRadios.terryo.org

NOTES:

1. UNLESS OTHERWISE SPECIFIED:
   a) RESISTANCE IS IN OHMS, ± 5%, 1/4W.
   b) CAPACITANCE IS IN µF.
2. POWER AND GND PINS FOR IC's ARE AS FOLLOWS:
   PIN 16 +5V, PIN 8 GND: U4, U5, U7, U8, U9, U10, U14, U17, U18
   PIN 14 +5V, PIN 7 GND: U1, U2, U3, U6, U16
   PIN 20 +5V, PIN 10 GND: U11, U12, U13
   PIN 11 +5V, PIN 13 GND: U15.
3. NUMBERS IN ( ) ARE HEXIDECIMAL MICROPROCESSOR ADDRESSES.
4. DIFFERENCE BETWEEN TYPES IS SHOWN IN TABLE A.
5. REPLACE R8 WITH JW2 FOR -6 ASSEMBLY.

PIN ARRANGEMENT (TYPICAL)

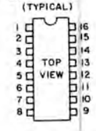

TABLE A

TYPE NO.	R8	CR4	CR5	R4	R12	R21	C19	C20	C5	R11	R24	R25	R26	C21	CR3	R6	R28	CR6	C22
794108-1	100 Ω 5%, 1/8 W	OMIT	OMIT	47	4.32K 1%, .1W	15K 1%, .1W	4.7	.022	0.1	680	10K 1%, .1W	OMIT	10K 1%, .1W	.022	OMIT	43K	33.2K 1%, .1W	OMIT	1000pF
794108-2	100 Ω 5%, 1/8 W	OMIT	OMIT	10	OMIT	OMIT	OMIT	OMIT	0.1	680	10K 1%, .1W	OMIT	10K 1%, .1W	.022	OMIT	43K	33.2K 1%, .1W	OMIT	1000pF
794108-3	100 Ω 5%, 1/8 W	OMIT	OMIT	47	100K 1%, .1W	15K 1%, .1W	4.7	.022	1.0	1.1K	100K 1%, .1W	OMIT	10K 1%, .1W	.022	OMIT	43K	33.2K 1%, .1W	OMIT	1000pF
794108-4	150 Ω 5%, 1/10W	LVA450A	IN749A	47	100K 1%, .1W	15K 1%, .1W	2.2	.47	1.0	1.1K	100K 1%, .1W	2.21K 1%, .1W	30.1K 1%, .1W	.47	HP-5082 -2800	OMIT	33.2K 1%, .1W	LVA450A	1000pF
794108-5	150 Ω 5%, 1/10W	LVA450A	IN749A	47	100K 1%, .1W	15K 1%, .1W	2.2	.47	1.0	1.1K	100K 1%, .1W	2.21K 1%, .1W	30.1K 1%, .1W	.47	HP-5082 -2800	OMIT	15K 1%, .1W	LVA450A	1000pF
794108-6	OMIT	LVA450A	IN749A	47	100K 1%, .1W	15K, 1%JW	2.2	.47	1.0	1.1K	100K 1%, .1W	2.21K 1%, .1W	30.1K 1%, .1W	.47	HP-5082 -2800	OMIT	15K 1%, .1W	LVA450A	OMIT

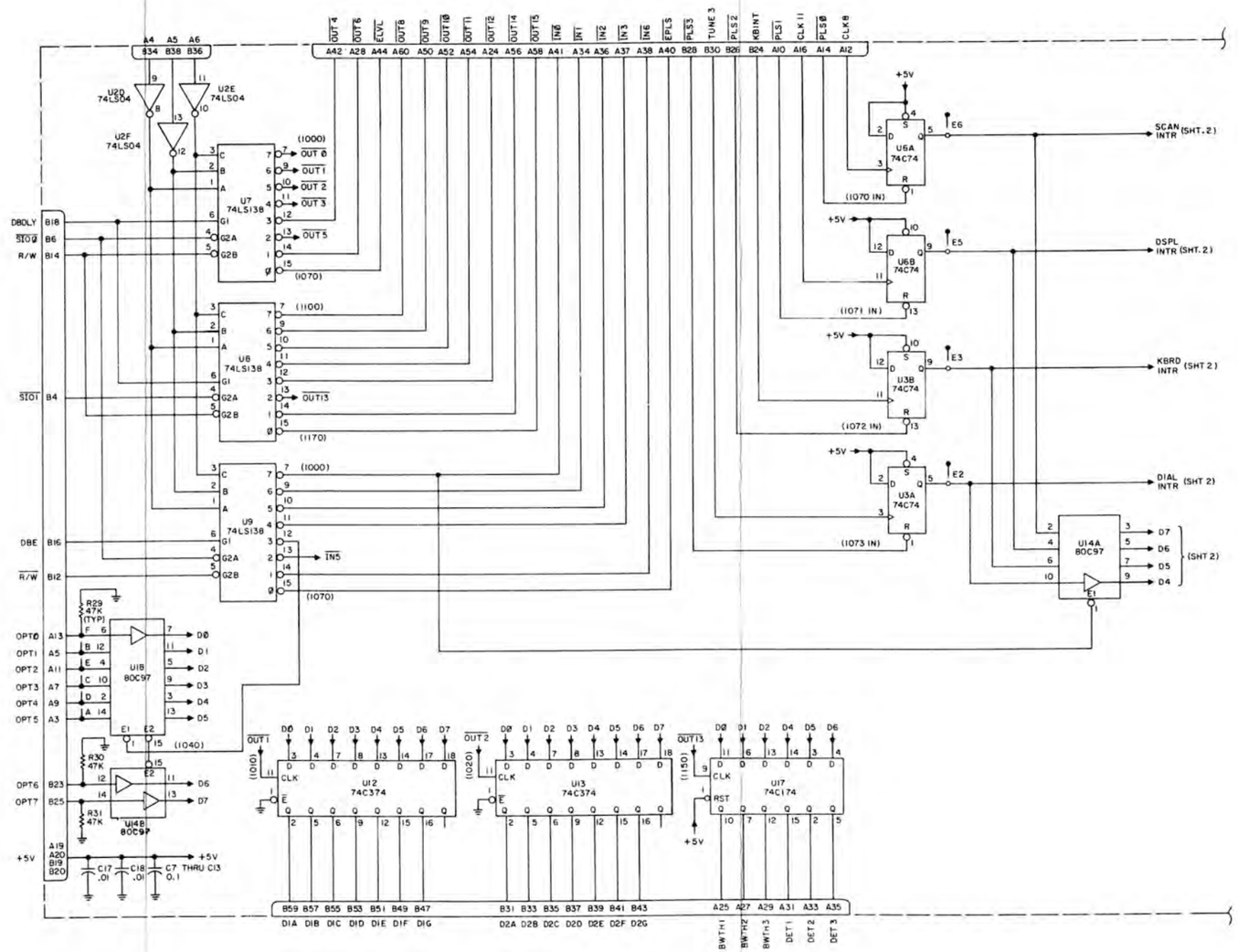

Figure 6-26. Type 794108-X, Receiver Interface (A5A1), Schematic Diagram 570075 (Sheet 1 of 2) (Q)

Courtesy of http://BlackRadios.terryo.org

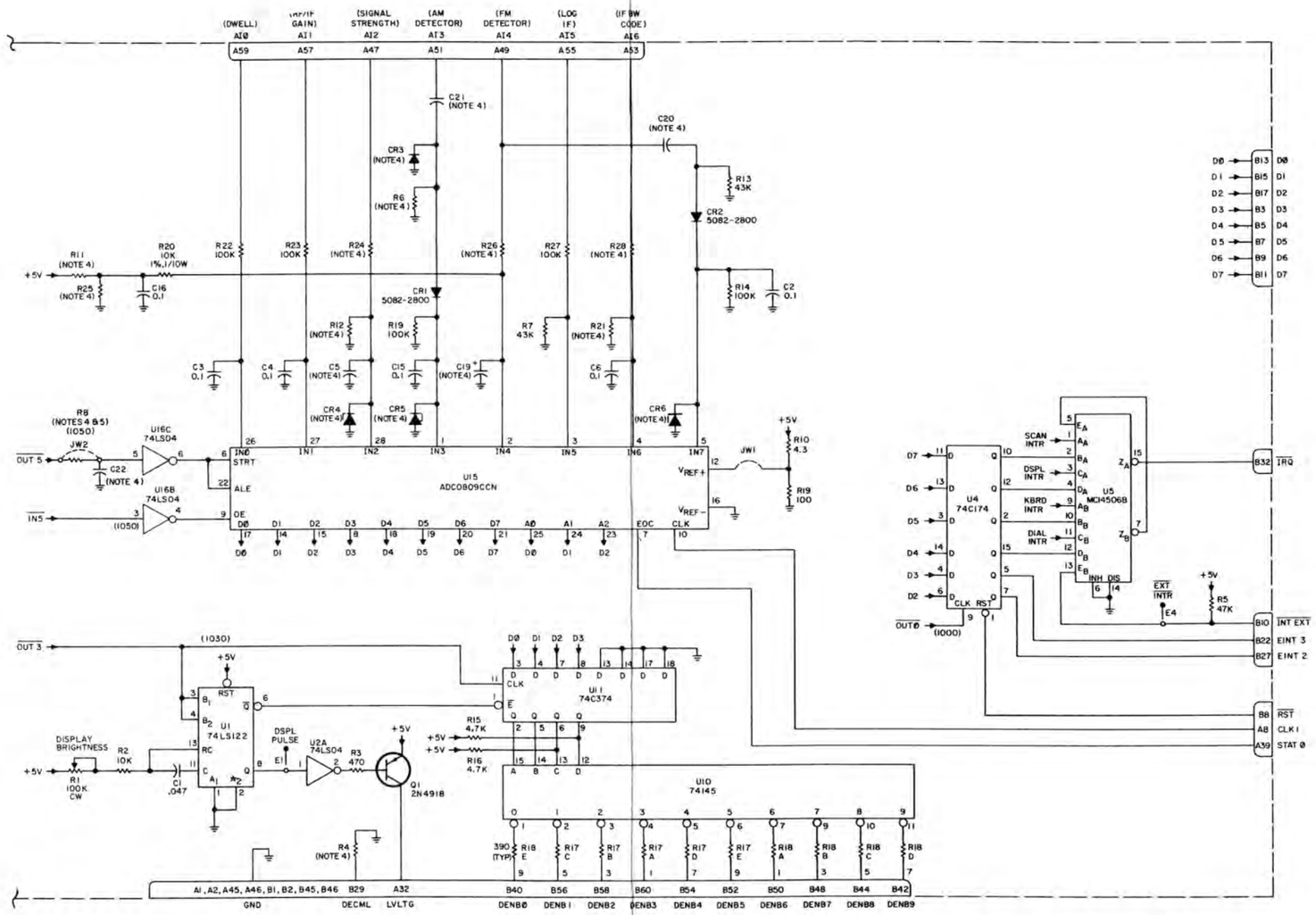

Figure 6-26. Type 794108-X, Receiver Interface (A5A1), Schematic Diagram 570075 (Sheet 2 of 2) (Q)

Courtesy of http://BlackRadios.terryo.org

NOTES

1. UNLESS OTHERWISE SPECIFIED
   a) RESISTANCE IS IN OHMS, ±5%, 1/4W
   b) CAPACITANCE IS IN µF.
2. Vcc AND GND PINS FOR U1, U2, U3, U13, U14 & U23 PINS 14 & 7; FOR U4, U16, U17, PINS 16 & 8; FOR U5 THRU U11, U15, U21, AND U22, PINS 20 & 10; FOR U12, PINS 28 & 14.
3. NUMBERS IN ( ) ARE HEXIDECIMAL MICROPROCESSOR ADDRESSES.
4. NOMINAL VALUE, FINAL VALUE FACTORY SELECTED.
5. DIFFERENCE BETWEEN TYPES IS SHOWN IN TABLE I.

TABLE I

TYPE NO.	Q1	R13
796321-1	2N2907	100Ω
796321-2	NOT USED	NOT USED

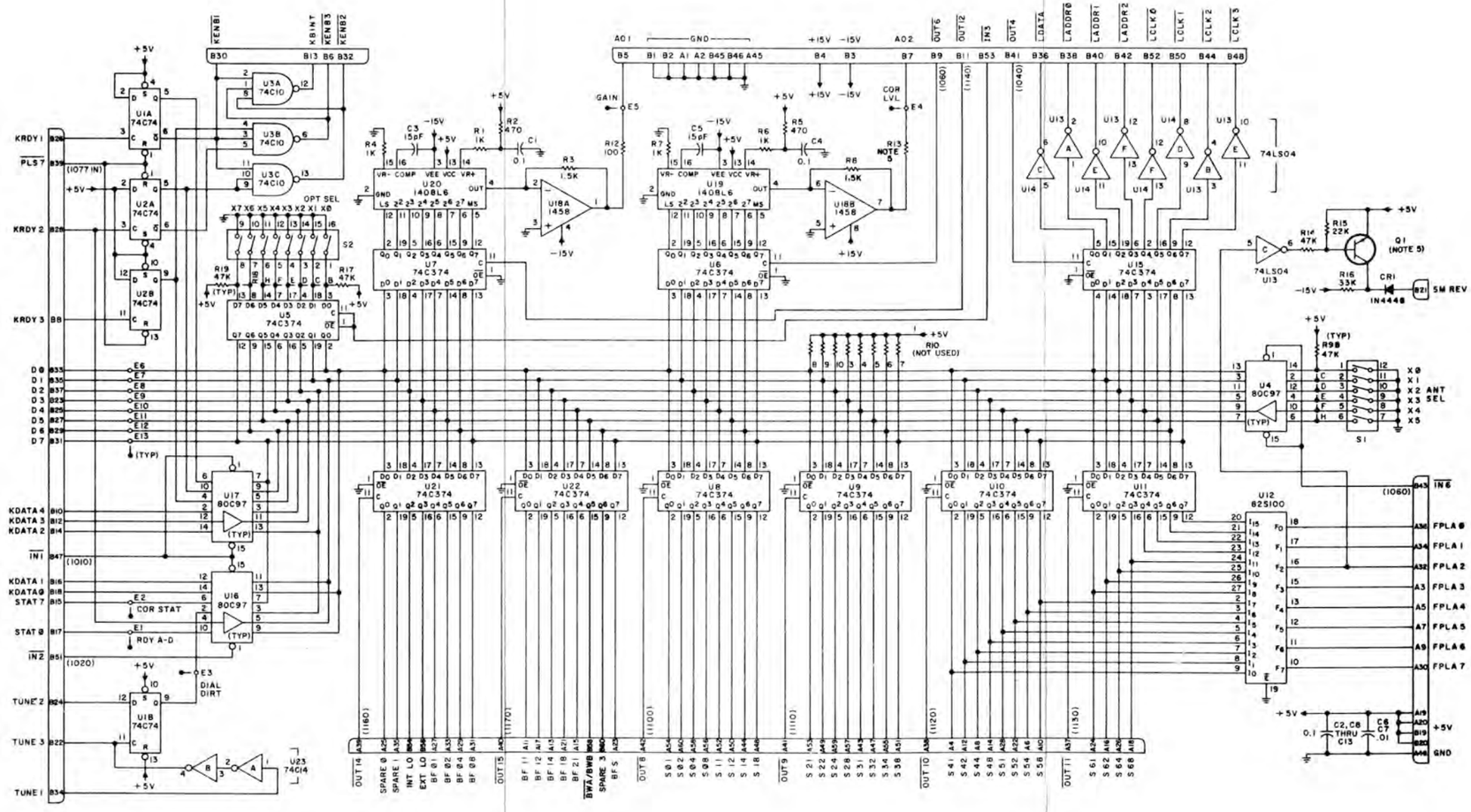

Figure 6-27. Type 796321-1, Synthesizer Interface (A5A2), Schematic Diagram 580212 (D)

Courtesy of http://BlackRadios.terryo.org

NOTES:
1. UNLESS OTHERWISE SPECIFIED:
   a) CAPACITANCE IS pF.
   b) RESISTANCE IS IN OHMS, ±5%, 1/8W.
2. WHEN 6116LP'S ARE USED, 24 PIN SOCKET IS INSTALLED SO THAT PIN 12 OF 24, MATCHES PIN 14 OF 28.
3. THE DIFFERENCE BETWEEN TYPES IS SHOWN IN TABLE I.

TABLE I

TYPE NO.	U4	U5	U6	U7	FUNCTION
796353-1	190169-99	190169-100	NOT USED	NOT USED	STD.UP MODULE
796353-2	-109	-110			EM
796353-3	-111	-112			LOC
796353-4	-113	-114			CUR
796353-5	-115	-116			EM,CUR
796353-6	-117	-118			LOC,CUR
796353-7	-119	-120			PAN/SEC
796353-8	-121	-122			PAN/SEC,EM
796353-9	-123	-124			PAN/SEC,LOC
796353-10	-128	-129			WU-86178-9
796353-11	-130	-131			WU-86178-10
796353-12	-132	-133			WU-86178-19

SPARES

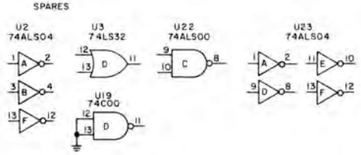

Y	Y1	
VR	VR1	
U	U23	
TP	TP12	
R	R14	
CR	CR7	
C	C24	
REF DESIG	LAST USED	NOT USED

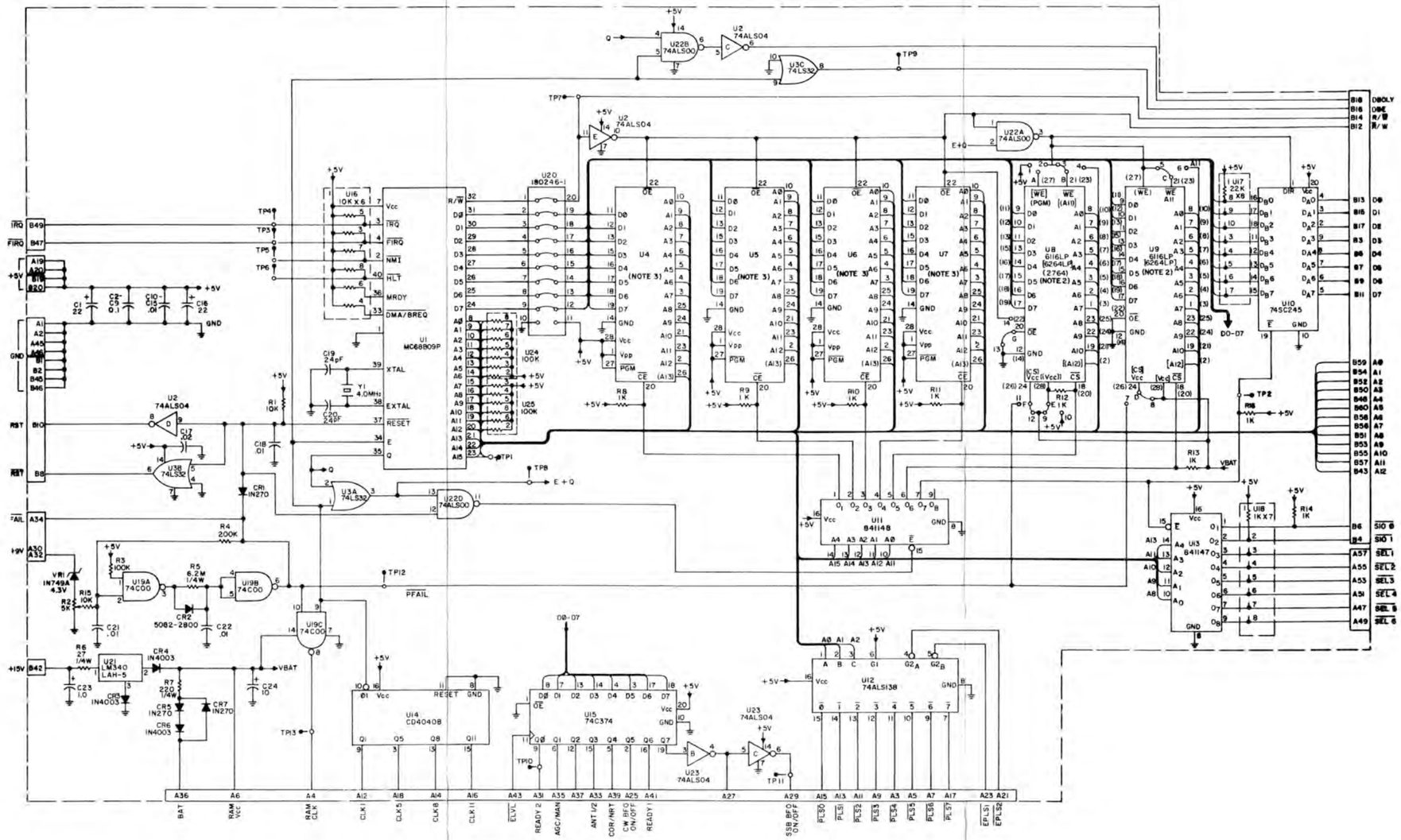

Figure 6-28. Type 796353-X, Microprocessor (A5A3), Schematic Diagram 580249 (D)

Courtesy of http://BlackRadios.terryo.org

NOTES:
1. UNLESS OTHERWISE SPECIFIED:
   a) CAPACITANCE IS pF.
   b) RESISTANCE IS IN OHMS, ±5%, 1/8W.
2. WHEN 6116LP'S ARE USED, 24 PIN SOCKET IS INSTALLED SO THAT PIN 12 OF 24, MATCHES PIN 14 OF 28.
3. THE DIFFERENCE BETWEEN TYPES IS SHOWN IN TABLE I.

TABLE I

TYPE NO.	U4	U5	U6	U7	FUNCTION
796353-1	190169-99	190169-100	NOT USED	NOT USED	STD.UP MODULE
796353-2	-109	-110			EM
796353-3	-111	-112			LOC
796353-4	-113	-114			CUR
796353-5	-115	-116			EM,CUR
796353-6	-117	-118			LOC,CUR
796353-7	-119	-120			PAN/SEC
796353-8	-121	-122			PAN/SEC,EM
796353-9	-123	-124			PAN/SEC,LOC
796353-10	-128	-129			WU-86178-9
796353-11	-130	-131			WU-86178-10
796353-12	-132	-133			WU-86178-19

SPARES

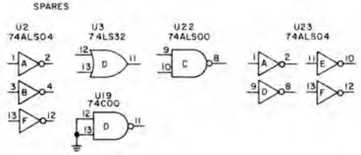

Y	Y1	
VR	VR1	
U	U23	
TP	TP12	
R	R14	
CR	CR7	
C	C24	
REF DESIG	LAST USED	NOT USED

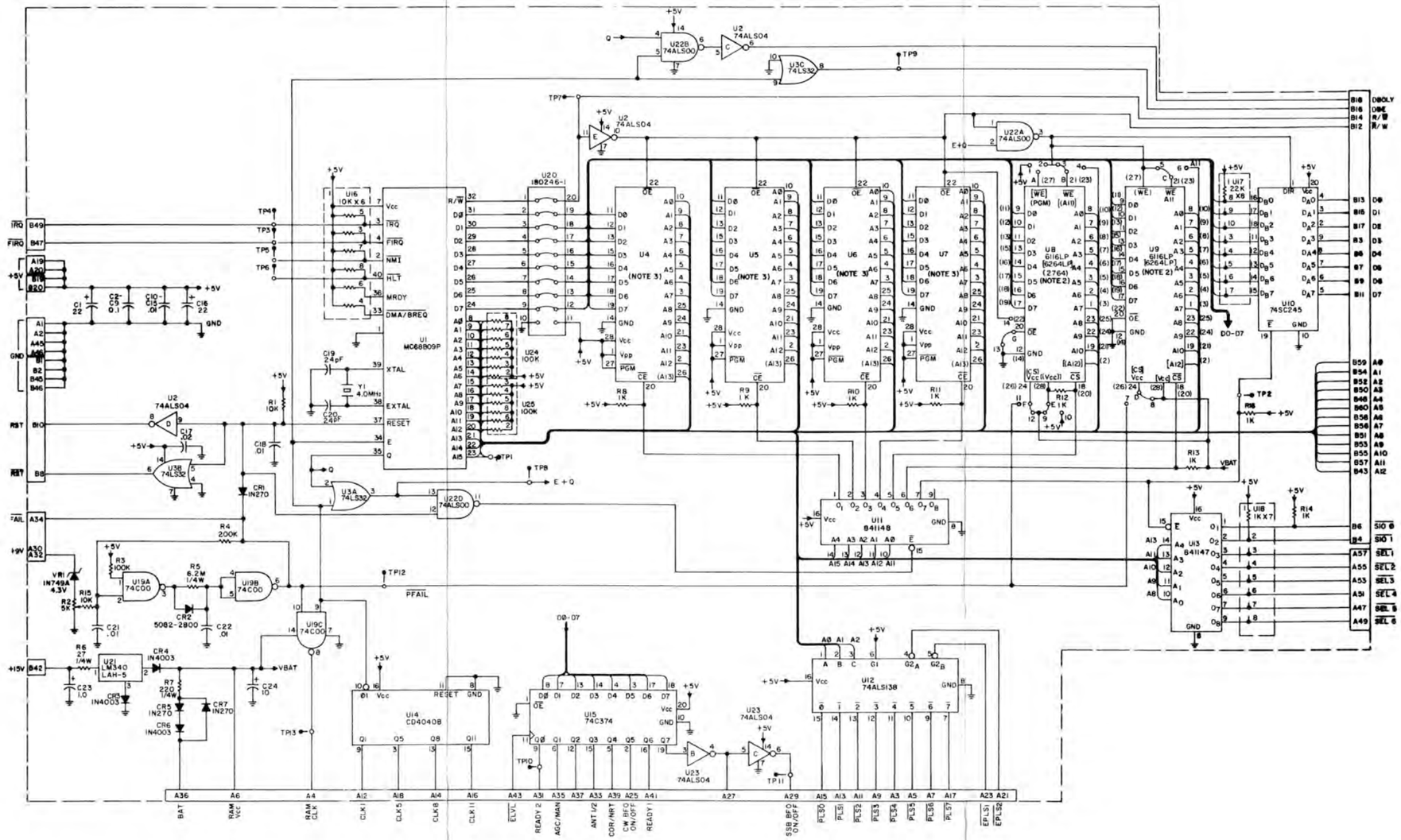

Figure 6-28. Type 796353-X, Microprocessor (A5A3), Schematic Diagram 580249 (D)

Courtesy of http://BlackRadios.terryo.org

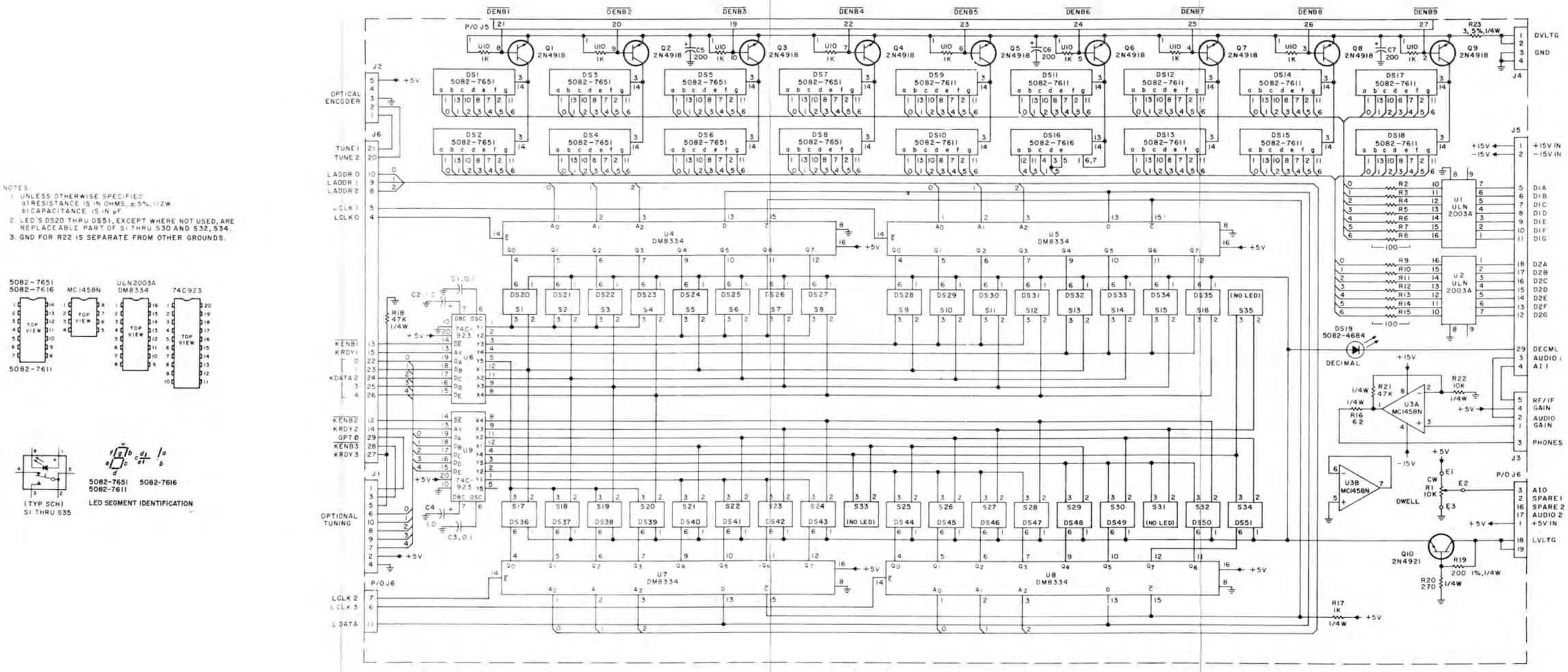

Figure 6-29. Type 794190-1, Front Panel Display and Control (A6), Schematic Diagram 590097 (E)

Courtesy of http://BlackRadios.terryo.org

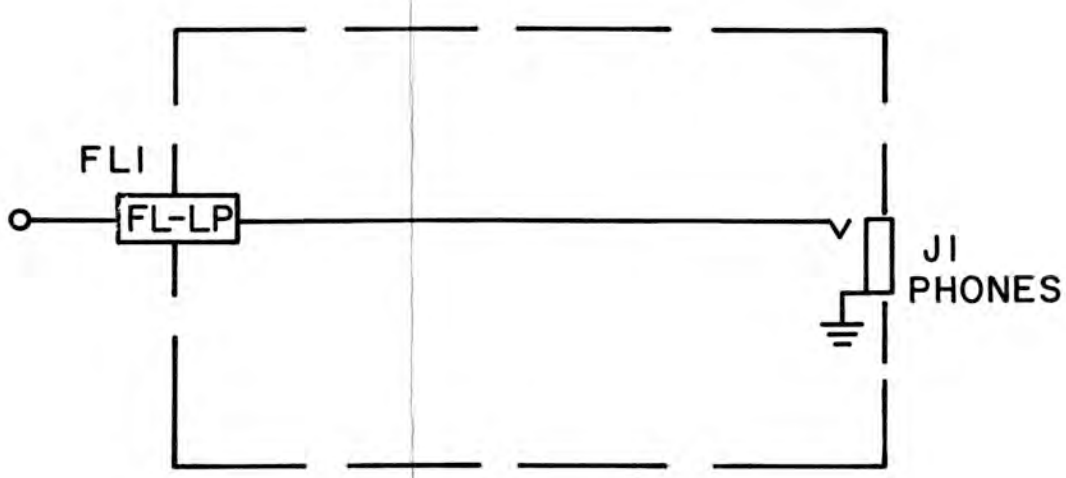

Figure 6-30. Type 794141-1, Phone Jack (A7), Schematic Diagram 170170 (B)

Courtesy of http://BlackRadios.terryo.org

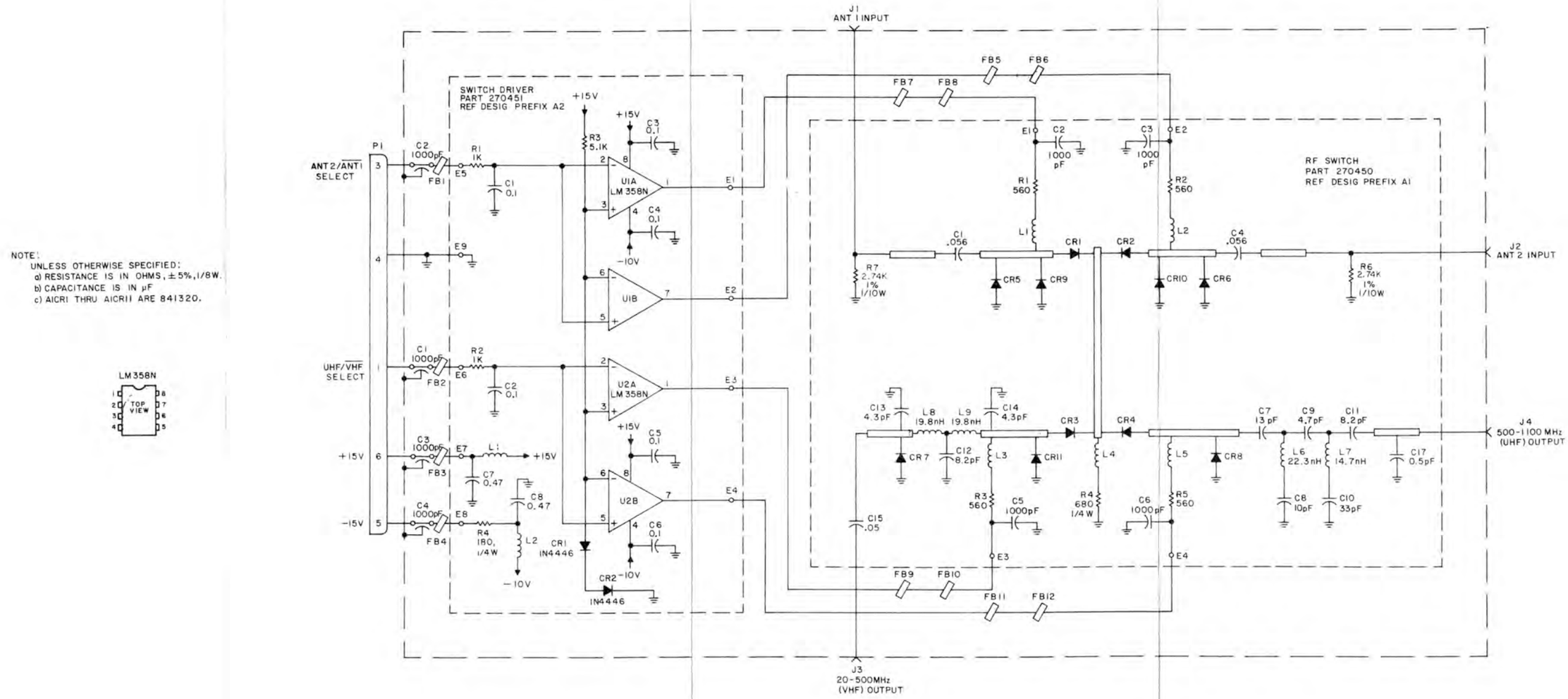

NOTE:
UNLESS OTHERWISE SPECIFIED:
a) RESISTANCE IS IN OHMS, ±5%, 1/8W.
b) CAPACITANCE IS IN μF
c) AICR1 THRU AICR11 ARE 841320.

Figure 6-31. Type 794128-1, Antenna Switch (A8), Schematic Diagram 470188 (J)

Courtesy of http://BlackRadios.terryo.org

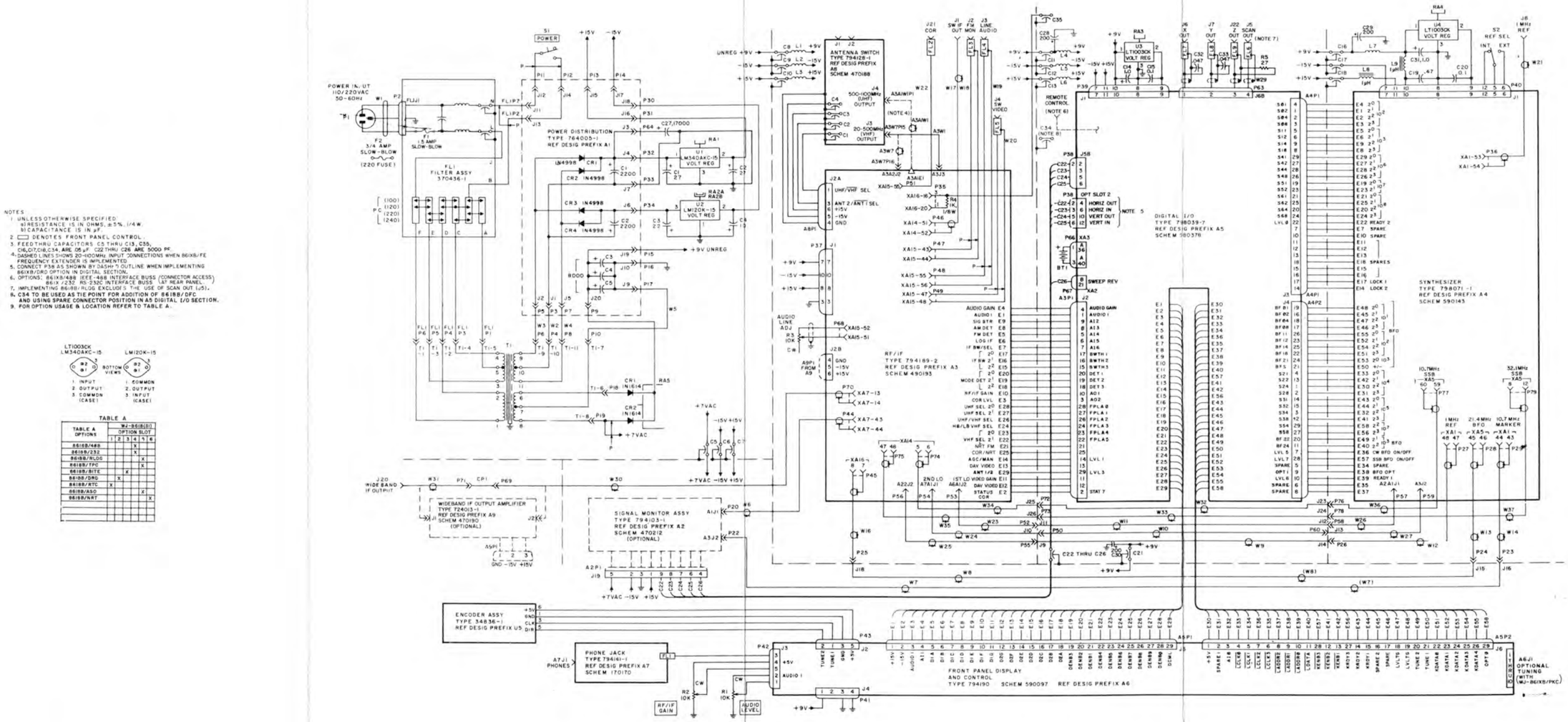

NOTES:
1. UNLESS OTHERWISE SPECIFIED:
   a) RESISTANCE IS IN OHMS, ±5%, 1/4 W.
   b) CAPACITANCE IS IN µF.
2. ▭ DENOTES FRONT PANEL CONTROL.
3. FEEDTHRU CAPACITORS C5 THRU C13, C35.
4. C16, C17, C18, C34, ARE .05 µF. C22 THRU C26 ARE 5000 PF.
5. DASHED LINES SHOWS 20-100MHz INPUT CONNECTIONS WHEN 8618/B/FE FREQUENCY EXTENDER IS IMPLEMENTED.
6. CONNECT P38 AS SHOWN BY DASH 7 OUTLINE WHEN IMPLEMENTING 8618/B/DRD OPTION IN DIGITAL SECTION.
7. OPTIONS: 8618/488 (IEEE-488 INTERFACE BUSS (CONNECTOR ACCESS) 8618/232 RS-232C INTERFACE BUSS (AT REAR PANEL.)
8. IMPLEMENTING 8618/RLOG EXCLUDES THE USE OF SCAN OUT (J5).
9. C34 TO BE USED AS TIE POINT FOR ADDITION OF 8618B/DFC AND USING SPARE CONNECTOR POSITION IN A5 DIGITAL I/O SECTION.
10. FOR OPTION USAGE & LOCATION REFER TO TABLE A.

LT1003CK LM340AKC-15 — 1. INPUT 2. OUTPUT 3. COMMON (CASE)

LM120K-15 — 1. COMMON 2. OUTPUT 3. INPUT (CASE)

TABLE A

TABLE A OPTIONS	WJ-8618(S1) OPTION SLOT 1	2	3	4	5	6
8618B/488			X			
8618B/232				X		
8618B/RLOG					X	
8618B/TPC					X	
8618B/BITE		X				
8618B/DRD	X					
8618B/ATC	X					
8618B/ASO						X
8618B/NRT						X

Figure 6-32. WJ-8618B(S1) VHF/UHF Receiver, Main Chassis Schematic Diagram 680089 (D)

Courtesy of http://BlackRadios.terryo.org